CORPORATION ADOPTION:

BY RESOLUTION APPROVED ON THE 8 DAY OF August, 2018, THE BOARD OF DIRECTORS OF THE T.O.A. CRANBERRY L.L.C., INCORPORATED IN THE STATE OF PENNSYLVANIA, OWNER OF THE LAND SHOWN ON THE T.O.A. CRANBERRY – PRD ADOPTED THIS PLAN AS ITS LAND DEVELOPMENT PLAN AND IRREVOCABLY DEDICATED ALL STREETS AND OTHER PROPERTY IDENTIFIED FOR DEDICATION ON THE PLAN TO THE PUBLIC. THIS ADOPTION AND DEDICATION SHALL BE BINDING UPON THE CORPORATION AND UPON ITS SUCCESSORS AND ASSIGNS.

(SEAL)

T.O.A. CRANBERRY L.L.C.

DAVID BIDDISON
MEMBER

TIMOTHY R. MCCARTHY
MEMBER

8-8-18
DATE

ACKNOWLEDGMENT OF CORPORATE ADOPTION AND DEDICATION:

BEFORE ME, THE UNDERSIGNED NOTARY PUBLIC IN AND FOR THE COMMONWEALTH OF PENNSYLVANIA AND COUNTY OF BEAVER, PERSONALLY APPEARED TIMOTHY R. MCCARTHY OF THE T.O.A. CRANBERRY L.L.C., WHO STATED THAT HE IS AUTHORIZED TO EXECUTE THE ABOVE ADOPTION AND DEDICATION ON BEHALF OF THE CORPORATION AND WAS PRESENT AT THE MEETING AT WHICH THE ACTION OF THE CORPORATION WAS TAKEN TO ADOPT THE PLAN AND DEDICATE PUBLIC PROPERTY CONTAINED THEREIN TO THE PUBLIC.

WITNESS MY HAND AND NOTARIAL SEAL THIS 8th DAY OF August, 2018.

COMMONWEALTH OF PENNSYLVANIA
NOTARIAL SEAL
Mark A. Lesnick, Notary Public
Economy Boro, Beaver County
My Commission Expires July 12, 2021
MEMBER, PENNSYLVANIA ASSOCIATION OF NOTARIES

NOTARY PUBLIC

CERTIFICATION OF TITLE:

I HEREBY CERTIFY THAT THE TITLE TO THE PROPERTY CONTAINED IN THE T.O.A. CRANBERRY – PRD IS IN THE NAME OF T.O.A. CRANBERRY L.L.C. AND IS RECORDED IN DEED BOOK VOLUME ____, PAGE ____. 201802160003095

WITNESS

TIMOTHY R. MCCARTHY, MEMBER

M&T BANK, MORTGAGEE OF THE PROPERTY CONTAINED IN THE T.O.A. CRANBERRY – PRD CONSENTS TO THE RECORDING OF SAID PLAN AND TO THE DEDICATIONS AND ALL OTHER MATTERS APPEARING ON THE PLAN.

WITNESS

NAME, TITLE, AND MORTGAGEE
Scott Kwiatek, VP M&T Bank

SURVEYOR'S CERTIFICATION:

I CERTIFY THAT, TO THE BEST OF MY KNOWLEDGE, THE SURVEY AND PLAN SHOWN HEREON ARE CORRECT AND ACCURATE TO THE STANDARDS REQUIRED.

8-7-2018
DATE

MARK B. SCHMIDT

SU-36950-E
REGISTRATION NUMBER

MUNICIPAL DEDICATIONS:

THE BOARD OF SUPERVISORS OF THE TOWNSHIP OF CRANBERRY, HEREBY GIVES NOTICE THAT IN APPROVING THIS PLAN FOR RECORDING, THE TOWNSHIP OF CRANBERRY HAS NOT ACCEPTED DEDICATION OF ANY STREETS, LAND OR PUBLIC FACILITIES AND HAS NO OBLIGATION TO IMPROVE OR MAINTAIN SUCH STREETS, LAND OR FACILITIES.

SECRETARY

CHAIRMAN, BOARD OF SUPERVISORS

THE TOWNSHIP OF CRANBERRY AGREES NOT TO ISSUE BUILDING PERMITS UNTIL THE "PLANNING MODULE FOR LAND DEVELOPMENT" HAS BEEN APPROVED IN ACCORDANCE WITH THE REGULATIONS OF THE PENNSYLVANIA DEPARTMENT OF ENVIRONMENTAL PROTECTION.

SECRETARY

CHAIRMAN, BOARD OF SUPERVISORS

CRANBERRY TOWNSHIP – BOARD OF SUPERVISORS:

THIS STATEMENT CERTIFIES ONLY THAT ACTION WAS TAKEN BY THE BOARD OF SUPERVISORS GRANTING FINAL APPROVAL.

APPROVED BY THE BOARD OF SUPERVISORS OF THE TOWNSHIP OF CRANBERRY BY ~~ORDINANCE~~/RESOLUTION NO. 2017-39 ON THE 15th DAY OF August, 2018.

SECRETARY

CHAIRMAN, BOARD OF SUPERVISORS

CRANBERRY TOWNSHIP – TOWNSHIP MANAGER:

I, Jerry Andree, TOWNSHIP MANAGER FOR THE TOWNSHIP OF CRANBERRY, CERTIFY THAT THE CONDITIONS FOR FINAL APPROVAL OUTLINED IN ORDINANCE/RESOLUTION NO. ____ HAVE BEEN MET IN ACCORDANCE WITH SECTIONS 22-305 AND 22-307 OF THE TOWNSHIP OF CRANBERRY CODE OF ORDINANCES.

TOWNSHIP MANAGER

CRANBERRY TOWNSHIP – MUNICIPAL ENGINEER:

I, JASON KRATSAS, A REGISTERED PROFESSIONAL ENGINEER, THE TOWNSHIP ENGINEER FOR CRANBERRY TOWNSHIP, DO HEREBY CERTIFY THAT THIS LAND DEVELOPMENT PLAN MEETS ALL THE ENGINEERING AND DESIGN REQUIREMENTS OF THE TOWNSHIP ORDINANCES EXCEPT AS DEPARTURES HAVE BEEN AUTHORIZED BY THE CRANBERRY TOWNSHIP BOARD OF SUPERVISORS.

8/15/18
DATE

SIGNATURE

PE071353
REGISTRATION NUMBER

BUTLER COUNTY PLANNING COMMISSION:

REVIEWED BY THE BUTLER COUNTY PLANNING COMMISSION ON THIS 17th DAY OF FEB 2017

SECRETARY

CHAIRMAN, BUTLER COUNTY PLANNING COMMISSION

PROOF OF RECORDING:

RECORDED IN THE OFFICE OF THE RECORDER OF DEEDS OF THE COUNTY OF BUTLER, COMMONWEALTH OF PENNSYLVANIA, IN PLAN BOOK VOLUME 373, PAGE(S) 1-6.

GIVEN UNDER MY HAND AND SEAL THIS 31 DAY OF August, 2018

MICHELE M. MUSTELLO
RECORDER OF DEEDS
My Commission Expires First Monday in January 2020

RECORDER OF DEEDS

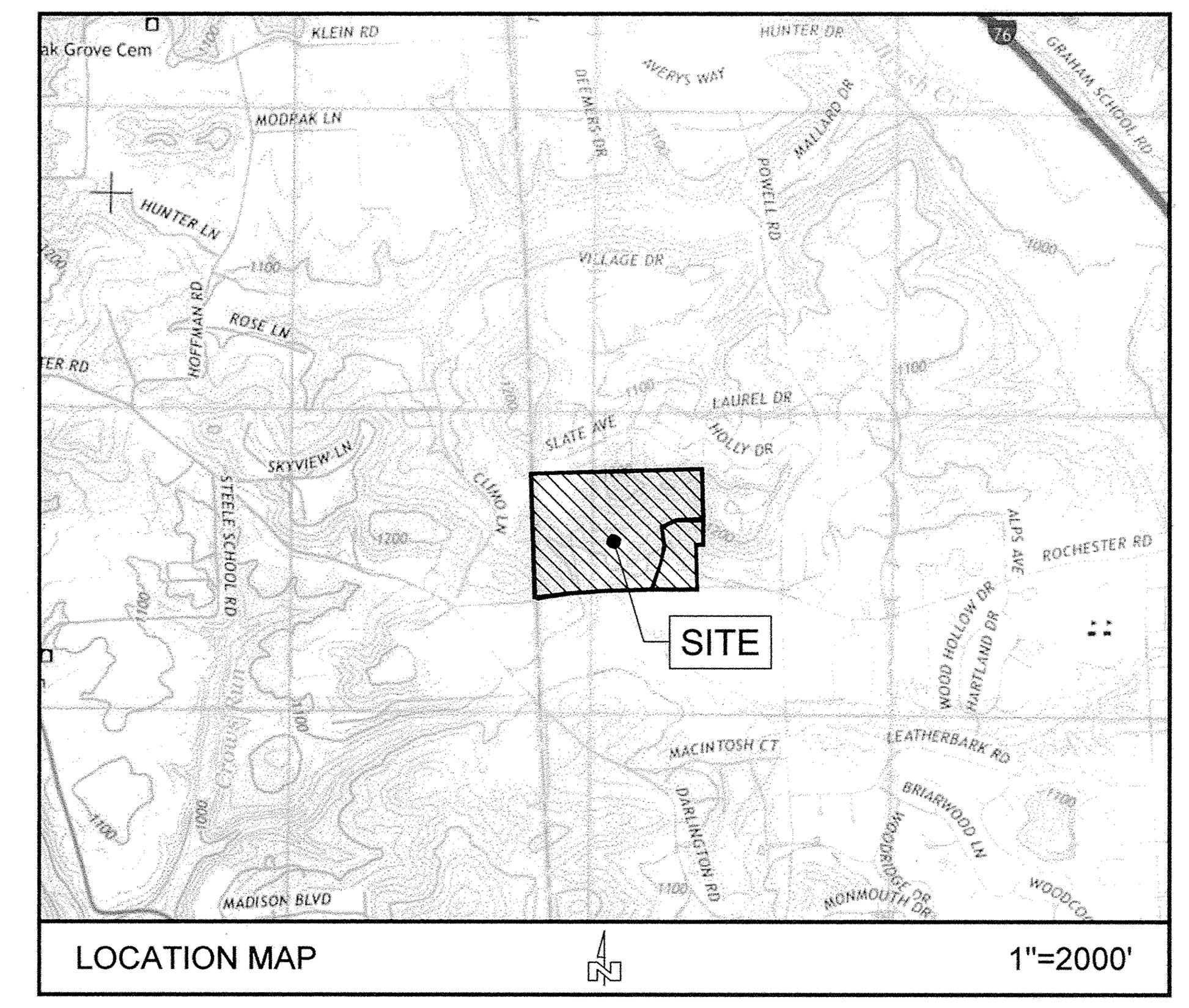

USGS 7.5 MIN. QUARANGLE
BADEN, PA 2013

CUMULATIVE SITE DATA			
	PHASE ONE	PHASE TWO	TOTAL
GROSS AREA	24.4 AC	30.7 AC	55.1 AC
DWELLING UNITS	39 DU	64 DU	103 DU
DENSITY	1.6 DU/AC	2.1 DU/AC	1.9 DU/AC
OPEN SPACE	7.9 AC	16.2 AC	24.1 AC
% OPEN SPACE	32%	53%	44%

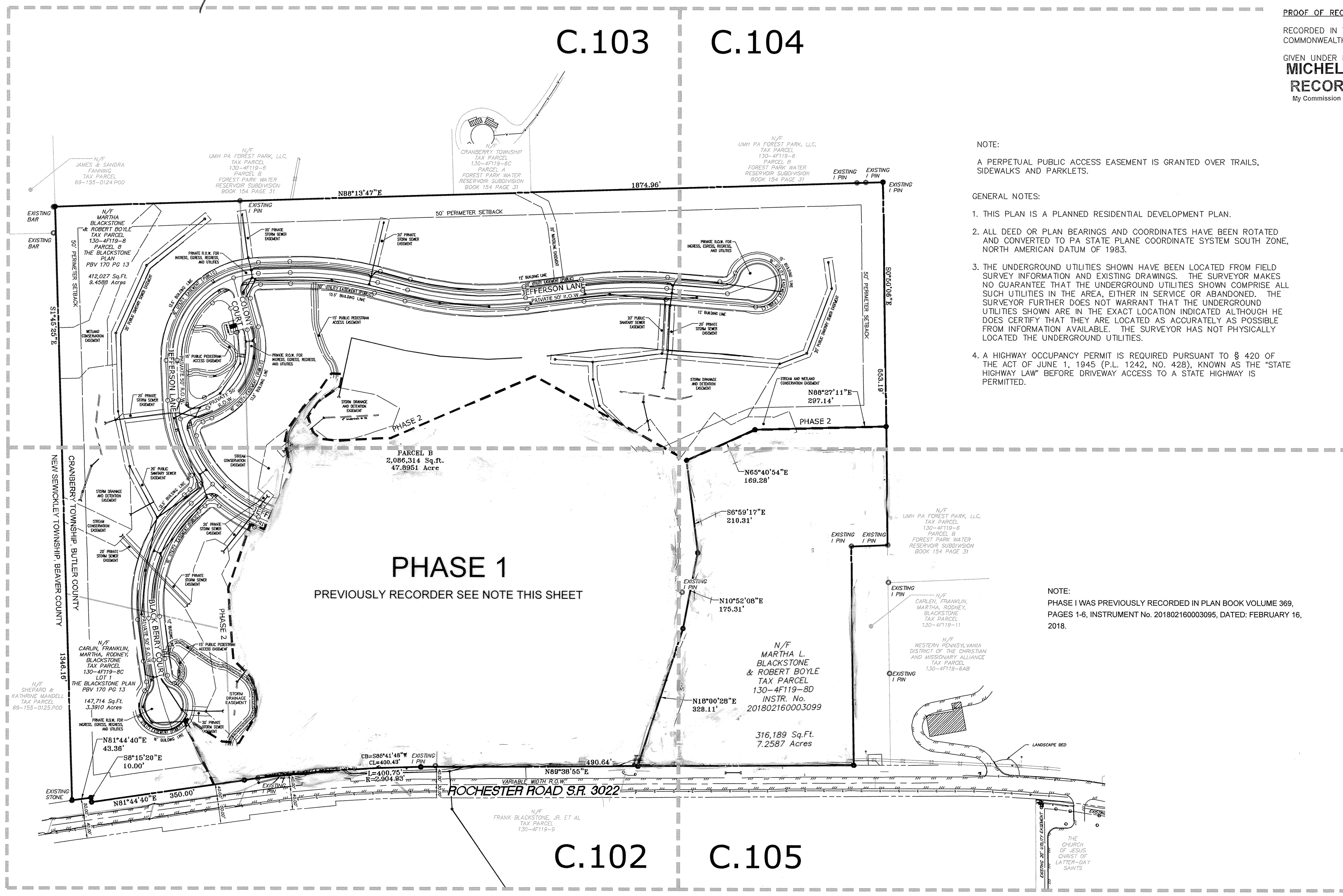

NOTE:

A PERPETUAL PUBLIC ACCESS EASEMENT IS GRANTED OVER TRAILS, SIDEWALKS AND PARKLETS.

GENERAL NOTES:

1. THIS PLAN IS A PLANNED RESIDENTIAL DEVELOPMENT PLAN.
2. ALL DEED OR PLAN BEARINGS AND COORDINATES HAVE BEEN ROTATED AND CONVERTED TO PA STATE PLANE COORDINATE SYSTEM SOUTH ZONE, NORTH AMERICAN DATUM OF 1983.
3. THE UNDERGROUND UTILITIES SHOWN HAVE BEEN LOCATED FROM FIELD SURVEY INFORMATION AND EXISTING DRAWINGS. THE SURVEYOR MAKES NO GUARANTEE THAT THE UNDERGROUND UTILITIES SHOWN COMPRISE ALL SUCH UTILITIES IN THE AREA, EITHER IN SERVICE OR ABANDONED. THE SURVEYOR FURTHER DOES NOT WARRANT THAT THE UNDERGROUND UTILITIES SHOWN ARE IN THE EXACT LOCATION INDICATED ALTHOUGH HE DOES CERTIFY THAT THEY ARE LOCATED AS ACCURATELY AS POSSIBLE FROM INFORMATION AVAILABLE. THE SURVEYOR HAS NOT PHYSICALLY LOCATED THE UNDERGROUND UTILITIES.
4. A HIGHWAY OCCUPANCY PERMIT IS REQUIRED PURSUANT TO § 420 OF THE ACT OF JUNE 1, 1945 (P.L. 1242, NO. 428), KNOWN AS THE "STATE HIGHWAY LAW" BEFORE DRIVEWAY ACCESS TO A STATE HIGHWAY IS PERMITTED.

NOTE:
PHASE I WAS PREVIOUSLY RECORDED IN PLAN BOOK VOLUME 369, PAGES 1-6, INSTRUMENT No. 201802160003095, DATED: FEBRUARY 16, 2018.

WAIVER/MODIFICATION REQUESTS.

§17-350.7.A(11) – STORMWATER MANAGEMENT STANDARDS – TOWNSHIP DESIGN REQUIREMENTS FOR STORMWATER MANAGEMENT, ITEMS A(11) WHICH REQUIRES THE FOLLOWING: STORMWATER RUNOFF SHALL NOT BE TRANSFERRED FROM ONE WATERSHED TO ANOTHER UNLESS THE WATERSHEDS ARE SUBAREAS OF A LARGER WATERSHED THAT ARE TRIBUTARY TO A COMMON POINT OF INTEREST WITHIN OR NEAR THE PERIMETER OF THE PROPERTY. TRANSFER OF RUNOFF FROM ONE WATERSHED TO ANOTHER UNDER ANY OTHER CIRCUMSTANCES SHALL ONLY BE APPROVED AT THE DISCRETION OF THE TOWNSHIP. DOCUMENTATION SHALL BE PROVIDED THAT PEAK FLOW RATES ARE NOT INCREASED FOLLOWING DEVELOPMENT AND THERE WILL BE NO DETRIMENTAL IMPACT IN DOWNSTREAM AREAS.

PROPOSAL – TAKE POTENTIAL RUNOFF FROM SUB-WATERSHED 98 AND DISCHARGE TO SUB-WATERSHED 89. WATERSHEDS ARE AS DEFINED BY THE RELEASE RATE PERCENTAGE MAP AS DEFINED IN APPENDIX A OF CHAPTER 17 – STORMWATER MANAGEMENT REGULATIONS. THERE IS NO REQUIRED REDUCTION IN PEAK FLOW, 100 PERCENT FOR SUB-WATERSHED 89 AND 100 PERCENT FOR SUB-WATERSHEDS 98.

JUSTIFICATION – THE PROPOSED RELEASE RATES IN THE TWO SUB-WATERSHEDS ARE WITHIN ACCEPTABLE LIMITS AS DEFINED IN CHAPTER 17 – STORMWATER MANAGEMENT REGULATIONS. DOCUMENTATION FOR THE PEAK FLOW RATES FOR THE MODIFIED AREAS OF SUB-WATERSHED 89 & 98 IS PROVIDED IN THE STORMWATER MANAGEMENT REPORT. FURTHERMORE IT IS NOT FEASIBLE TO CONSTRUCTION A STORMWATER MANAGEMENT FACILITY THAT DISCHARGES TO SUB-WATERSHED 98, AS A SUITABLE LOCATION FOR A POINT SOURCE DISCHARGE IS NOT AVAILABLE ON SITE.

§27-903.3.B.(1)(b) – Construct streetscape enhancements along all public and private streets and at all intersections, consisting of street walls, context-sensitive fencing, pedestrian pockets, area lighting, and other elements as more fully described in the Streetscape Enhancement Overlay Ordinance.

Proposal – The Corner Lot Treatment and brick crosswalks have been removed. The brick crosswalks at the intersection with the clubhouse will remain. Refer to the revised Entrance Treatment for the entry sign and landscaping.

Justification – This requirement is being revised in an upcoming PRD ordinance.

§27-903.3.B.(1)(c) – Construct context-sensitive streetlights on both sides of proposed streets and on the development side of existing streets where the development entrance and/or exit is proposed.

Proposal – The streetlights have been removed from the plans and post-style residential lights will be provided at each unit. Two Township-required light standards will be provided at the entry at Rochester Road.

Justification – This requirement is being revised in an upcoming PRD ordinance.

§27-903.3.B.(1)(d) – Construct pedestrian pockets at all designated school bus stops. A minimum of one pedestrian pocket shall be provided for every development. If there are no designated school bus stops, then a pedestrian pocket shall be constructed at 50% of all intersections.

Proposal – The Pedestrian Pocket #2 has been removed from the plans. (Pedestrian Pocket #1 next to the Clubhouse will remain.) Parklet A and B remain but only one bench structure at each Pocket and Parklet will be provided and all trash receptacles will be removed.

Justification – This requirement is being revised in an upcoming PRD ordinance.

§27-903.3.B.(1)(i) – Construct all stormwater detention basins to be either naturalized or wet basins and provide pedestrian connection via trails with seating/viewing areas to 50% of all basins.

Proposal – The three (3) proposed Detention Seating Areas have been removed.

Justification – This requirement is being revised in an upcoming PRD ordinance.

STORMWATER MANAGEMENT NOTES AND STATEMENTS:

17.350.7.C.(2)(G)5 — "AS PER THE APPROVED STORMWATER MANAGEMENT PLAN, THE TOWNSHIP SHALL HAVE RIGHT OF ACCESS TO THE ON-SITE DETENTION FACILITY FOR THE RIGHT OF MAINTENANCE, MONITORING, AND/OR SAMPLING, IN THE EVENT THE OWNER, ASSIGNS OR HEIRS DO NOT ADEQUATELY MAINTAIN OR MONITOR THE FACILITY. THE OWNER, ASSIGNS OR HEIRS SHALL REIMBURSE THE TOWNSHIP FOR ALL COSTS ASSOCIATED WITH SAID MAINTENANCE. THE AFOREMENTIONED RIGHTS GRANTED THE TOWNSHIP IN NO WAY DIMINISH THE RESPONSIBILITY OF THE OWNER, ASSIGNS OR HEIRS OF SAID MAINTENANCE AND MONITORING, AND NO LIABILITY WILL BE ASSUMED BY THE TOWNSHIP ASSOCIATED WITH REQUIRED ACCESS FOR MAINTENANCE OR MONITORING PURPOSES."

17.350.7.C.(2)(G)14 — IT SHALL BE UNLAWFUL TO ALTER OR REMOVE ANY PERMANENT STORMWATER BMP REQUIRED BY AN APPROVED SWM SITE PLAN OR TO ALLOW THE PROPERTY TO REMAIN IN A CONDITION THAT DOES NOT CONFORM TO AN APPROVED SWM SITE PLAN, UNLESS THE TOWNSHIP GRANTS AN EXCEPTION IN WRITING.

17.350.7.C.(2)(G)16 — NO PERSON SHALL MODIFY, REMOVE, FILL, LANDSCAPE, OR ALTER ANY EXISTING STORMWATER BMP, FACILITIES, AREAS, OR STRUCTURES, UNLESS IT IS PART OF AN APPROVED MAINTENANCE PROGRAM, WITHOUT THE WRITTEN APPROVAL OF THE TOWNSHIP.

17.350.7.C.(9) — MUNICIPAL LIABILITY DISCLAIMER. APPROVAL OF A STORMWATER MANAGEMENT PLAN BY THE TOWNSHIP SHALL NOT BE CONSTRUED AS AN INDICATION THAT SAID PLAN COMPLIES WITH THE REQUIREMENTS, LAWS, OR STANDARDS OF ANY AGENCY OF THE COMMONWEALTH WHICH MAY OR MAY NOT GOVERN SAID ACTIVITY.

17.350.8.I.(9)(a) — A STATEMENT SIGNED BY THE LANDOWNER ACKNOWLEDGING THAT THE STORMWATER BMPS ARE FIXTURES THAT CANNOT BE ALTERED OR REMOVED WITHOUT PRIOR APPROVAL BY THE TOWNSHIP.

17.350.8.I.(9)(d) — "I, ____, HEREBY CERTIFY THAT THE STORMWATER MANAGEMENT PLAN MEETS ALL DESIGN STANDARDS AND CRITERIA OF THE CRANBERRY TOWNSHIP STORMWATER MANAGEMENT ORDINANCE."

17.350.8.I.(9)(e) — "I, ____, HAVE REVIEWED THIS STORMWATER MANAGEMENT PLAN IN ACCORDANCE WITH THE DESIGN STANDARDS AND CRITERIA OF THE CRANBERRY TOWNSHIP STORMWATER MANAGEMENT ORDINANCE."

17.350.14.B.(1) — PROVIDE A CERTIFICATION OF COMPLETION FROM AN ENGINEER, ARCHITECT, SURVEYOR OR OTHER QUALIFIED PERSON VERIFYING THAT ALL PERMANENT FACILITIES HAVE BEEN CONSTRUCTED ACCORDING TO THE SWM SITE PLAN AND REPORT AND APPROVED REVISIONS THERETO.

ZONING INFORMATION			
	R-2 SINGLE FAMILY RESIDENTIAL	R-2 PRD	T.O.A. PRD
SITE AREA	NO STANDARD	NO MIN.	55.1 ACRES
OPEN SPACE	NO STANDARD	25% MIN.	44%
PERIMETER BUFFER	NO STANDARD	50 FT MIN.	50 FT MIN.
MIN. NET LOT AREA	0.75 ACRES (1)	NO MIN.	ZERO LOT LINE COMMUNITY
MIN. LOT WIDTH	FRONT SETBACK LINE: 85 FT (1) FRONT LOT LINE: 25 FT (1)	NO MIN.	ZERO LOT LINE COMMUNITY
MAX. LOT COVERAGE	15%	NO MAX.	ZERO LOT LINE COMMUNITY
MIN. FRONT YARD	40 FT	NO MIN.	25 FT – 27 FT FROM BACK OF CURB
MIN. SIDE YARD	10 FT	NO MIN.	15 FT BETWEEN BLDG'S
MIN. REAR YARD	25 FT	NO MIN.	ZERO LOT LINE COMMUNITY
MAX. BLDG HEIGHT	35 FT	??	2 STORIES MAX
MAX DWELLING UNIT DENSITY	1 DU/LOT	1.9 DU/AC	1.9 DU/AC
MIN. PARKING REQUIRMENTS	2/DU	2/DU	2/DU
AUTHORIZED DWELLING UNITS	SINGLE FAMILY-DETACHED	SINGLE FAMILY-DETACHED, SINGLE FAMILY-ATTACHED, TWO FAMILY, TOWNHOUSE, MULTIFAMILY	SINGLE FAMILY-DETACHED

(1) WHERE THERE IS PUBLIC SEWER

ISSUES & REVISIONS				
NO.	DESCRIPTION	DATE	DR.	CH.
1	Revised per Township Comment Letter April 25, 2017	05/05/17	–	---
2	Revised per Township Comment Letter May 25, 2017, As Per Resolution	11/02/17	–	---
3	Revised per Township Comment Letter November 25, 2017, As Per Resolution	11/30/17	–	---
4	Revised per Township Comment Letter January 8, 2018, As Per Resolution	01/15/18	–	---
5	Revised per Township direction April 25, 2018.	05/01/18	–	---
6	Revised per Township Twp. comment letter dated May 24, 2018	05/29/18	–	---
7	Revised per Township Comment Letter June 29, 2018, As Per Resolution	07/25/18	–	---

DEVELOPER
T.O.A. CRANBERRY L.L.C.
201 KING OF PRUSSIA ROAD, SUITE 370
RADNOR, PA 19087
PHONE: (215) 732-9600

Instr:201808310018023 08/31/2018
Pages:6 F:$245.00 3:54PM
Michele Mustello T20180012813
Butler County Recorder FL

PLAN BOOK	PAGE
373	1

CRANBERRY TOWNSHIP BOARD OF SUPERVISORS	CRANBERRY TOWNSHIP MUNICIPAL ENGINEER	BUTLER COUNTY PLANNING COMMISSION	BUTLER COUNTY RECORDER OF DEEDS OFFICE

COMMONWEALTH OF PENNSYLVANIA
REGISTERED PROFESSIONAL
MARK B. SCHMIDT
LAND SURVEYOR
SU-036950-E

HAMPTON
TECHNICAL ASSOCIATES, INC.
ENGINEERING LAND SURVEYORS
ESTABLISHED 1960
www.Hampton-Technical.com
email@hampton-technical.com

☐ Corporate Office
Etna Technical Center
35 Wilson Street, Suite 201
Pittsburgh, PA 15223
PHONE (412) 781-9660
FAX (412) 781-5904

☒ Mars Office
123 Ridge Road, Suite 3
Valencia, PA 16059
PHONE (724) 625-4544
FAX (724) 625-4549

DRAWN BY: JEC
CHECKED BY: APH
APPROVED BY: MBS
CAD FILE: 11332-1 Recording.dwg

TITLE: T.O.A. Cranberry – PRD
Overall Plan of Recording
Cranberry Township, Butler County, Pennsylvania

CLIENT: T.O.A. Cranberry L.L.C.
201 King of Prussia Road, Suite 370, Radnor, PA 19087

DATE ISSUED: April 2017
HORIZONTAL SCALE: 1" = 150'
VERTICAL SCALE: –
SHEET: C.101
HTA PROJECT #: 11332-1

X:\18-XXXX Jobs\18-11300 Jobs\18-11332-1\Production Drawings\11332-1 Recording.dwg, C.101 Overall Plan Of Recording, 8/3/2018 11:07 AM

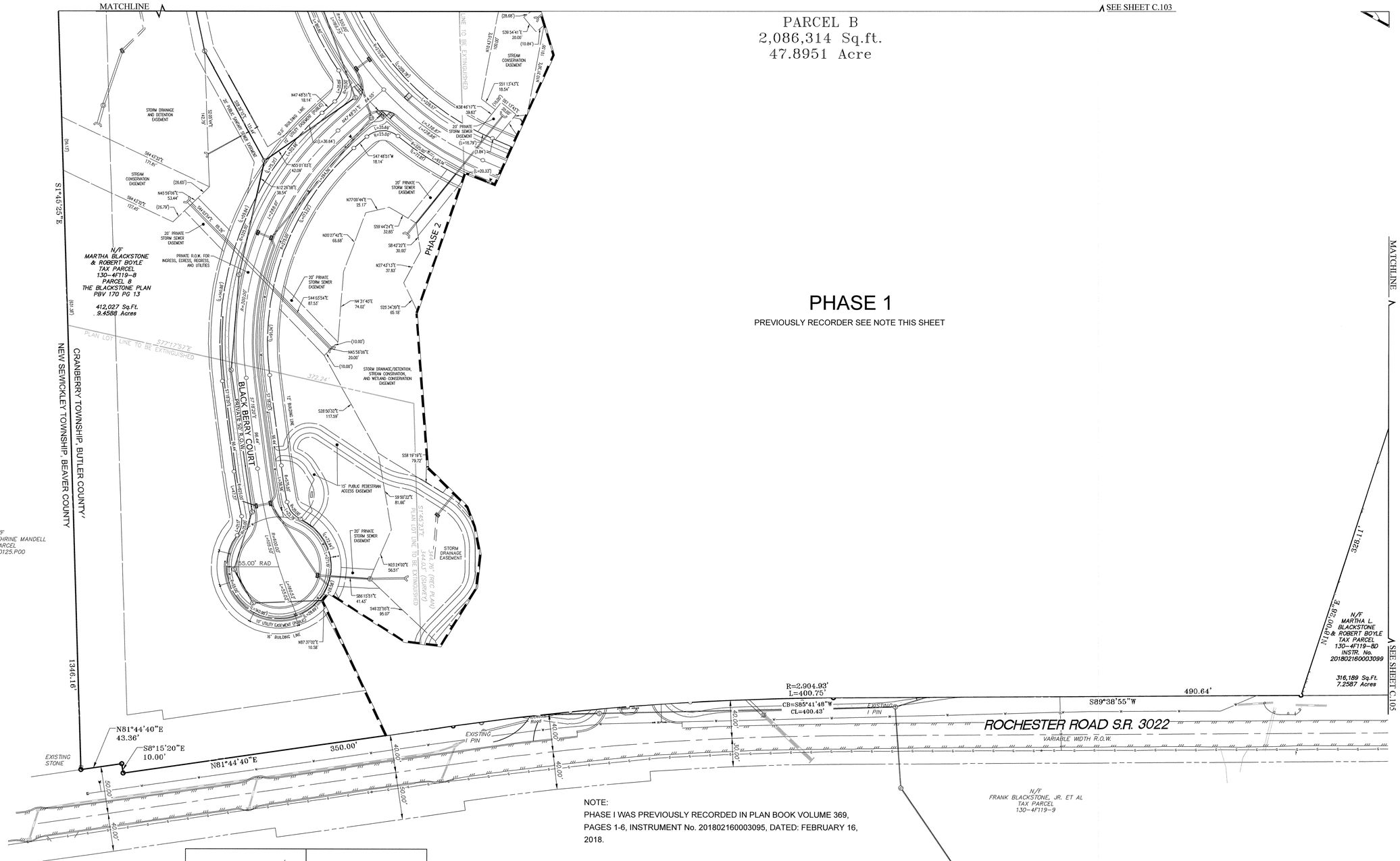

NOTE:
PHASE I WAS PREVIOUSLY RECORDED IN PLAN BOOK VOLUME 369, PAGES 1-6, INSTRUMENT No. 201802160003095, DATED: FEBRUARY 16, 2018.

NOTE:

1. Lots 239, 240, 241, 242, 243, 244, 245, 246, 263 and 264 shall not have any additions or footprints that extend into the 50' PRD buffer.
2. All driveways to be 18' in length minimum measured from the back of sidewalk.

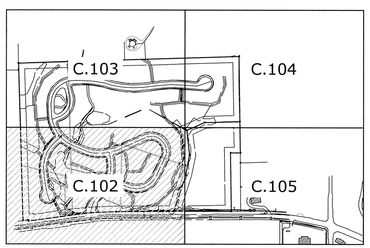

Key Map

GRAPHIC SCALE

50 0 25 50 100 200

(IN FEET)
1 inch = 50 ft.

PLAN BOOK	PAGE
373	2

ISSUES & REVISIONS

NO.	DESCRIPTION	DATE	DR.	CH.
1	Revised per Township Comment Letter April 25, 2017	05/05/17	–	---
2	Revised per Township Comment Letter May 25, 2017, As Per Resolution	11/02/17	–	---
3	Revised per Township Comment Letter November 25, 2017, As Per Resolution	11/30/17	–	---
4	Revised per Township Comment Letter January 8, 2018, As Per Resolution	01/15/18	–	---
5	Revised per Township direction April 25, 2018.	05/01/18	–	---
6	Revised per Township Twp. comment letter dated May 24, 2018	05/29/18	–	---
7	Revised per Township Comment Letter June 29, 2018, As Per Resolution	07/25/18	–	---

MARK B. SCHMIDT
LAND SURVEYOR
PROFESSIONAL
REGISTERED
PROFESSIONAL
LAND SURVEYOR
PROFESSIONAL
LAND SURVEYOR

HAMPTON
TECHNICAL ASSOCIATES, INC.
ENGINEERING LAND SURVEYORS
ESTABLISHED 1960
www.Hampton-Technical.com
email@hampton-technical.com

☐ Corporate Office
Etna Technical Center
35 Wilson Street, Suite 201
Pittsburgh, PA 15223
PHONE: (412) 781-9660
FAX: (412) 781-5904

☒ Mars Office
123 Ridge Road, Suite B
Valencia, PA 16059
PHONE: (724) 625-4544
FAX: (724) 625-4549

DRAWN BY: JEC
CHECKED BY: APH
APPROVED BY: MBS
CAD FILE: 11332-1 Recording PHASE 2.dwg

TITLE
T.O.A. Cranberry – PRD
Plan of Recording
Cranberry Township Butler County, Pennsylvania

CLIENT
T.O.A. Cranberry L.L.C.
201 King of Prussia Road, Suite 370 Radnor, PA 19087

DATE ISSUED: April 2017
HORIZONTAL SCALE: 1" = 50'
VERTICAL SCALE: –
SHEET: C.102
HTA PROJECT #: 11332-1

X:\18-XXXX Jobs\18-11300 Jobs\18-11332-1\Production Drawings\11332-1 Recording PHASE 2.dwg, C.102 Plan Of Recording, 8/9/2018 10:51 AM

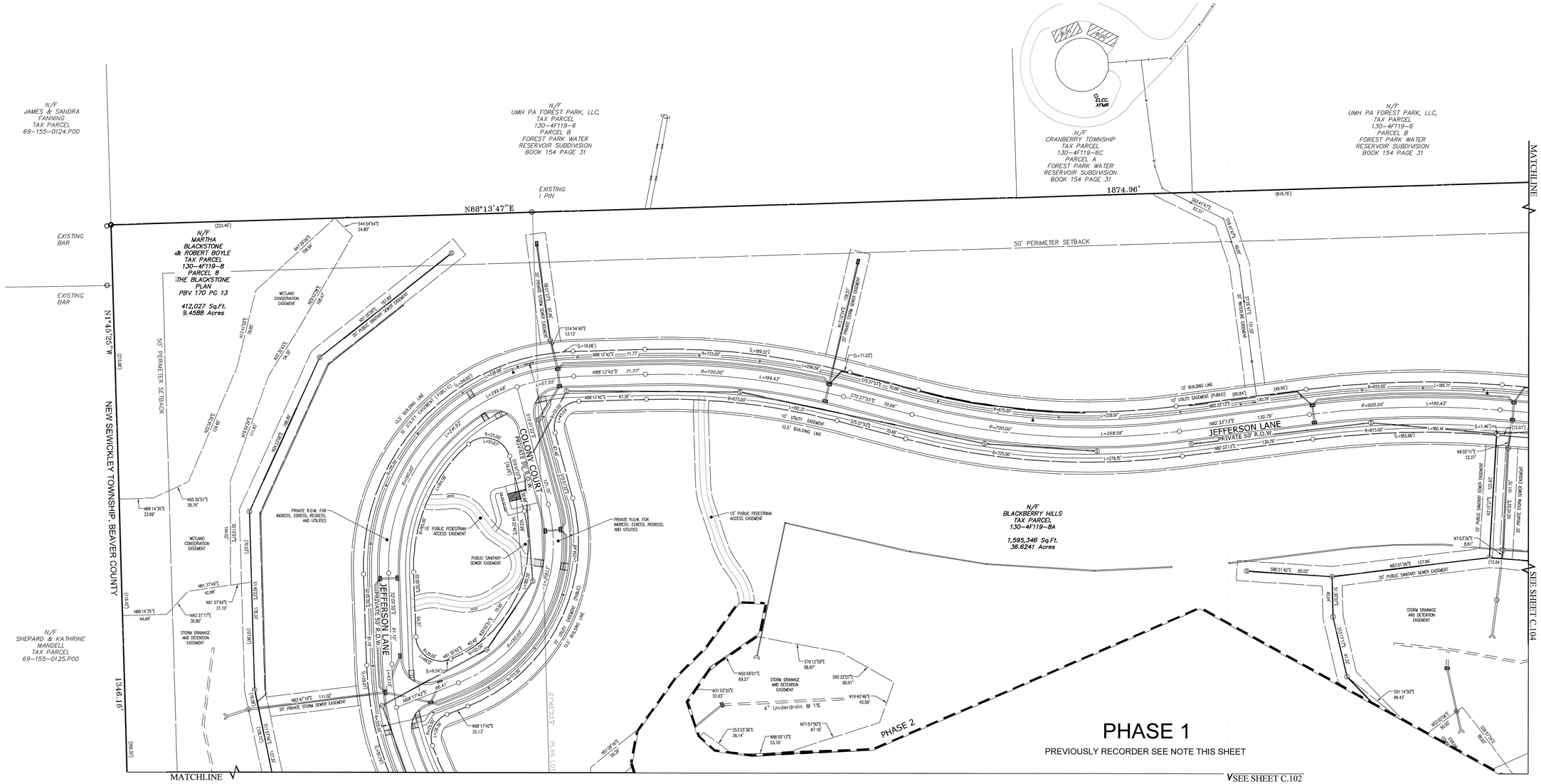

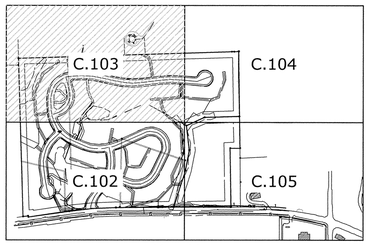

Key Map

GRAPHIC SCALE

50 0 25 50 100 200

(IN FEET)
1 inch = 50 ft.

NOTE:

1. Lots 239, 240, 241, 242, 243, 244, 245, 246, 263 and 264 shall not have any additions or footprints that extend into the 50' PRD buffer.
2. All driveways to be 18' in length minimum measured from the back of sidewalk.

NOTE:
PHASE I WAS PREVIOUSLY RECORDED IN PLAN BOOK VOLUME 369, PAGES 1-6, INSTRUMENT No. 201802160003095, DATED: FEBRUARY 16, 2018.

PLAN BOOK	PAGE
373	3

ISSUES & REVISIONS

NO.	DESCRIPTION	DATE	DR.	CH.
1	Revised per Township Comment Letter April 25, 2017	05/05/17	-	---
2	Revised per Township Comment Letter May 25, 2017, As Per Resolution	11/02/17	-	---
3	Revised per Township Comment Letter November 25, 2017, As Per Resolution	11/30/17	-	---
4	Revised per Township Comment Letter January 8, 2018, As Per Resolution	01/15/18	-	---
5	Revised per Township direction April 25, 2018.	05/01/18	-	---
6	Revised per Township Twp. comment letter dated May 24, 2018	05/29/18	-	---
7	Revised per Township Comment Letter June 29, 2018, As Per Resolution	07/25/18	-	---

MARK B. SCHMIDT
COMMONWEALTH OF PENNSYLVANIA
REGISTERED PROFESSIONAL
LAND SURVEYOR
SU-060011
STATE OF PENNSYLVANIA

HAMPTON
TECHNICAL ASSOCIATES, INC.
ENGINEERING LAND SURVEYORS
ESTABLISHED 1960
www.Hampton-Technical.com
email@hampton-technical.com

☐ Corporate Office
Elite Technical Center
235 Penn Avenue, Suite 201
Pittsburgh, PA 15223
PHONE: (412) 781-9660
FAX: (412) 781-9984

☒ Mars Office
123 Ridge Road, Suite B
Mars, PA 16046
PHONE: (724) 625-4544
FAX: (724) 625-4549

DRAWN BY: JEC
CHECKED BY: APH
APPROVED BY: MBS
CAD FILE: 11332-1 Recording PHASE 2.dwg

TITLE: T.O.A. Cranberry - PRD
Plan of Recording
Cranberry Township Butler County, Pennsylvania

CLIENT: T.O.A. Cranberry LLC.
201 King of Prussia Road, Suite 570 Radnor, PA 19087

DATE ISSUED: April 2017
HORIZONTAL SCALE: 1" = 50'
VERTICAL SCALE: --
SHEET: C.103
HTA PROJECT #: 11332-1

X:\18-XXXX Jobs\18-11300 Jobs\18-11332-1\Production Drawings\11332-1 Recording PHASE 2.dwg, C.103 Plan Of Recording, 8/9/2018 10:51 AM

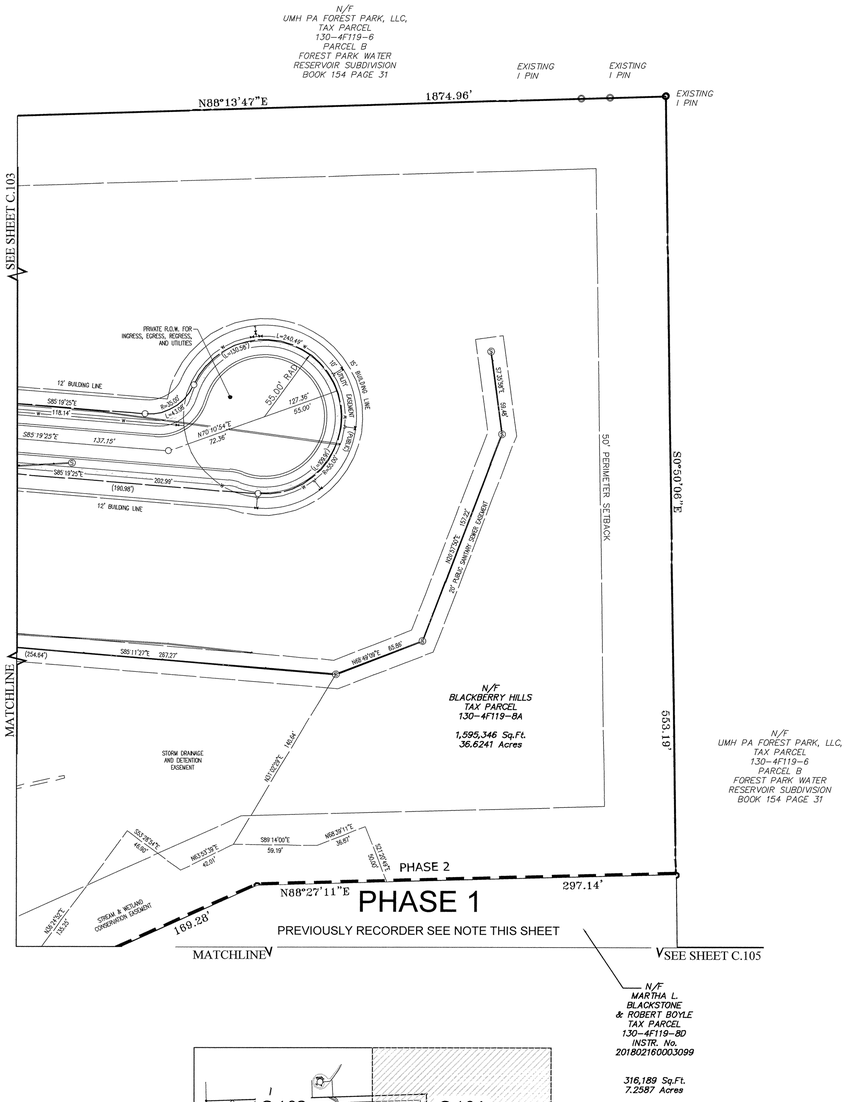

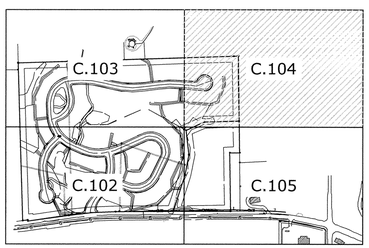

Key Map

NOTE:
PHASE I WAS PREVIOUSLY RECORDED IN PLAN BOOK VOLUME 369, PAGES 1-6, INSTRUMENT No. 201802160003095, DATED: FEBRUARY 16, 2018.

NOTE:

1. Lots 239, 240, 241, 242, 243, 244, 245, 246, 263 and 264 shall not have any additions or footprints that extend into the 50' PRD buffer.
2. All driveways to be 18' in length minimum measured from the back of sidewalk.

GRAPHIC SCALE

50 0 25 50 100 200

(IN FEET)
1 inch = 50 ft.

PLAN BOOK	PAGE
373	4

ISSUES & REVISIONS

NO.	DESCRIPTION	DATE	DR.	CH.
1	Revised per Township Comment Letter April 25, 2017	05/05/17	–	---
2	Revised per Township Comment Letter May 25, 2017, As Per Resolution	11/02/17	–	---
3	Revised per Township Comment Letter November 25, 2017, As Per Resolution	11/30/17	–	---
4	Revised per Township Comment Letter January 8, 2018, As Per Resolution	01/15/18	–	---
5	Revised per Township direction April 25, 2018.	05/01/18	–	---
6	Revised per Township Twp. comment letter dated May 24, 2018	05/29/18	–	---
7	Revised per Township Comment Letter June 29, 2018, As Per Resolution	07/25/18	–	---

HAMPTON
TECHNICAL ASSOCIATES, INC.
ENGINEERING LAND SURVEYORS
ESTABLISHED 1960
www.Hampton-Technical.com
email@hampton-technical.com

☐ Corporate Office
Elma Technical Center
35 Wilson Street, Suite 201
Pittsburgh, PA 15223
PHONE: (412) 781-9660
FAX: (412) 781-5904

☒ Mars Office
123 Ridge Road, Suite B
Valencia, PA 16059
PHONE: (724) 625-4544
FAX: (724) 625-4549

DRAWN BY: JEC
CHECKED BY: APH
APPROVED BY: MBS
CAD FILE: 11332-1 Recording PHASE 2.dwg

TITLE: T.O.A. Cranberry – PRD
Plan of Recording
Cranberry Township Butler County, Pennsylvania

CLIENT: T.O.A. Cranberry L.L.C.
201 King of Prussia Road, Suite 370 Radnor, PA 19067

DATE ISSUED: April 2017
HORIZONTAL SCALE: 1" = 50'
VERTICAL SCALE: –
SHEET: C.104
HTA PROJECT #: 11332-1

X:\18-XXXX Jobs\18-11300 Jobs\18-11332-1\Production Drawings\11332-1 Recording PHASE 2.dwg, C.104 Plan Of Recording, 8/9/2018 10:51 AM

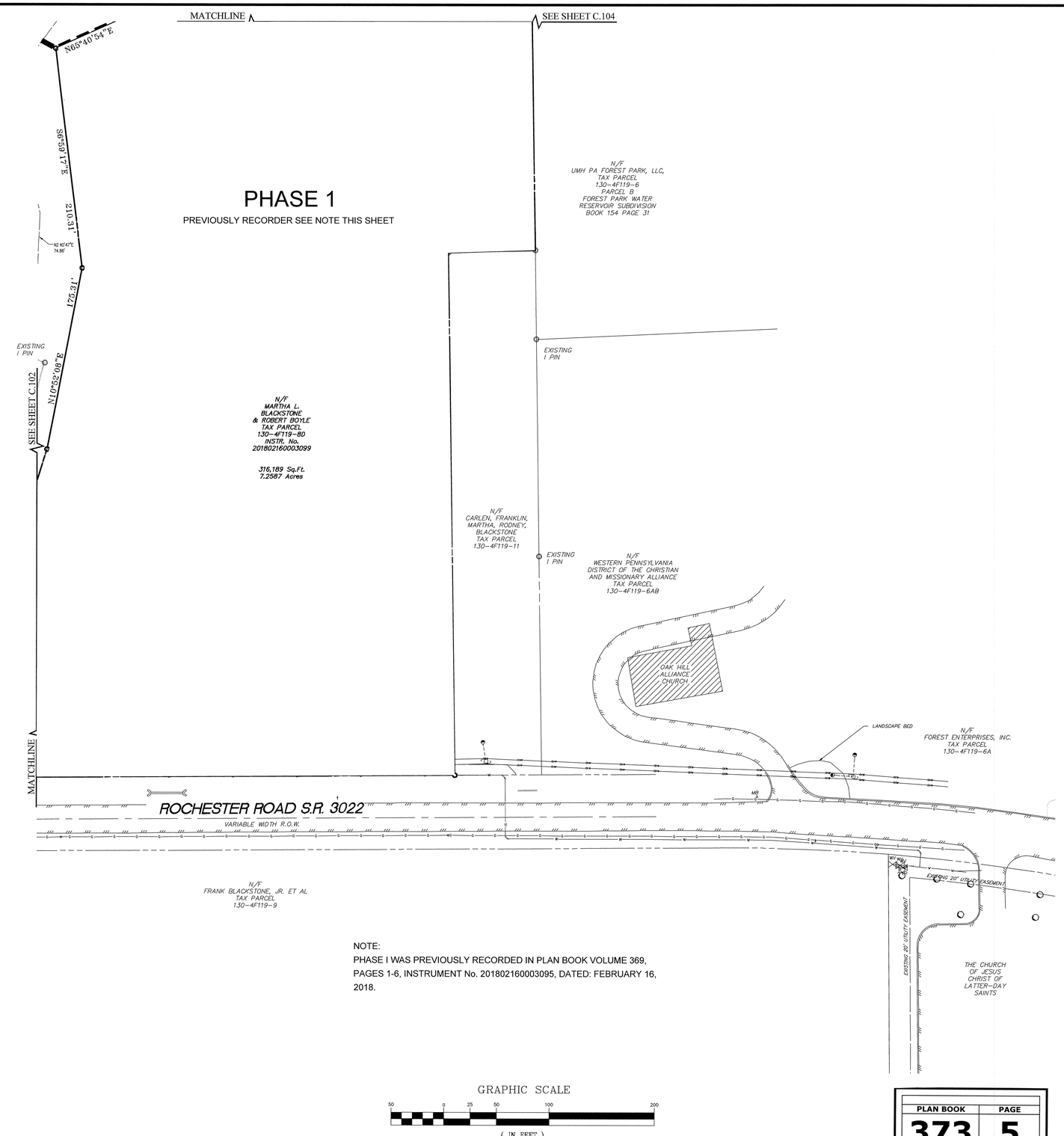

NOTE:

1. Lots 239, 240, 241, 242, 243, 244, 245, 246, 263 and 264 shall not have any additions or footprints that extend into the 50' PRD buffer.
2. All driveways to be 18' in length minimum measured from the back of sidewalk.

NOTE:

PHASE I WAS PREVIOUSLY RECORDED IN PLAN BOOK VOLUME 369, PAGES 1-6, INSTRUMENT No. 201802160003095, DATED: FEBRUARY 16, 2018.

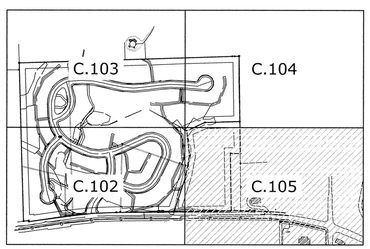

Key Map

GRAPHIC SCALE

50 0 25 50 100 200

(IN FEET)
1 inch = 50 ft.

PLAN BOOK	PAGE
373	5

ISSUES & REVISIONS

NO.	DESCRIPTION	DATE	DR.	CH.
1	Revised per Township Comment Letter April 25, 2017	05/05/17	–	---
2	Revised per Township Comment Letter May 25, 2017, As Per Resolution	11/02/17	–	---
3	Revised per Township Comment Letter November 25, 2017, As Per Resolution	11/30/17	–	---
4	Revised per Township Comment Letter January 8, 2018, As Per Resolution	01/15/18	–	---
5	Revised per Township direction April 25, 2018.	05/01/18	–	---
6	Revised per Township Twp. comment letter dated May 24, 2018	05/29/18	–	---
7	Revised per Township Comment Letter June 29, 2018, As Per Resolution	07/25/18	–	---

COMMONWEALTH OF PENNSYLVANIA
REGISTERED PROFESSIONAL
MARK B. SCHMIDT
LAND SURVEYOR
SU-38950

HAMPTON
TECHNICAL ASSOCIATES, INC.
ENGINEERING LAND SURVEYORS
ESTABLISHED 1960
www.Hampton-Technical.com
email@hampton-technical.com

☐ Corporate Office
Elmo Technical Center
35 Wilson Street, Suite 201
Pittsburgh, PA 15223
PHONE: (412) 781-9660
FAX: (412) 781-5904

☒ Mars Office
123 Ridge Road, Suite B
Valencia, PA 16059
PHONE: (724) 625-4544
FAX: (724) 625-4549

DRAWN BY: JEC
CHECKED BY: APH
APPROVED BY: MBS
CAD FILE: 11332-1 Recording PHASE 2.dwg

TITLE: T.O.A. Cranberry – PRD
Plan of Recording
Cranberry Township Butler County, Pennsylvania

CLIENT: T.O.A. Cranberry L.L.C.
201 King of Prussia Road, Suite 370 Radnor, PA 19087

DATE ISSUED: April 2017
HORIZONTAL SCALE: 1" = 50'
VERTICAL SCALE: –
SHEET: C.105
HTA PROJECT #: 11332-1

X:\18-XXXX Jobs\18-11300 Jobs\18-11332-1\Production Drawings\11332-1 Recording PHASE 2.dwg, C.105 Plan Of Recording, 8/9/2018 10:51 AM

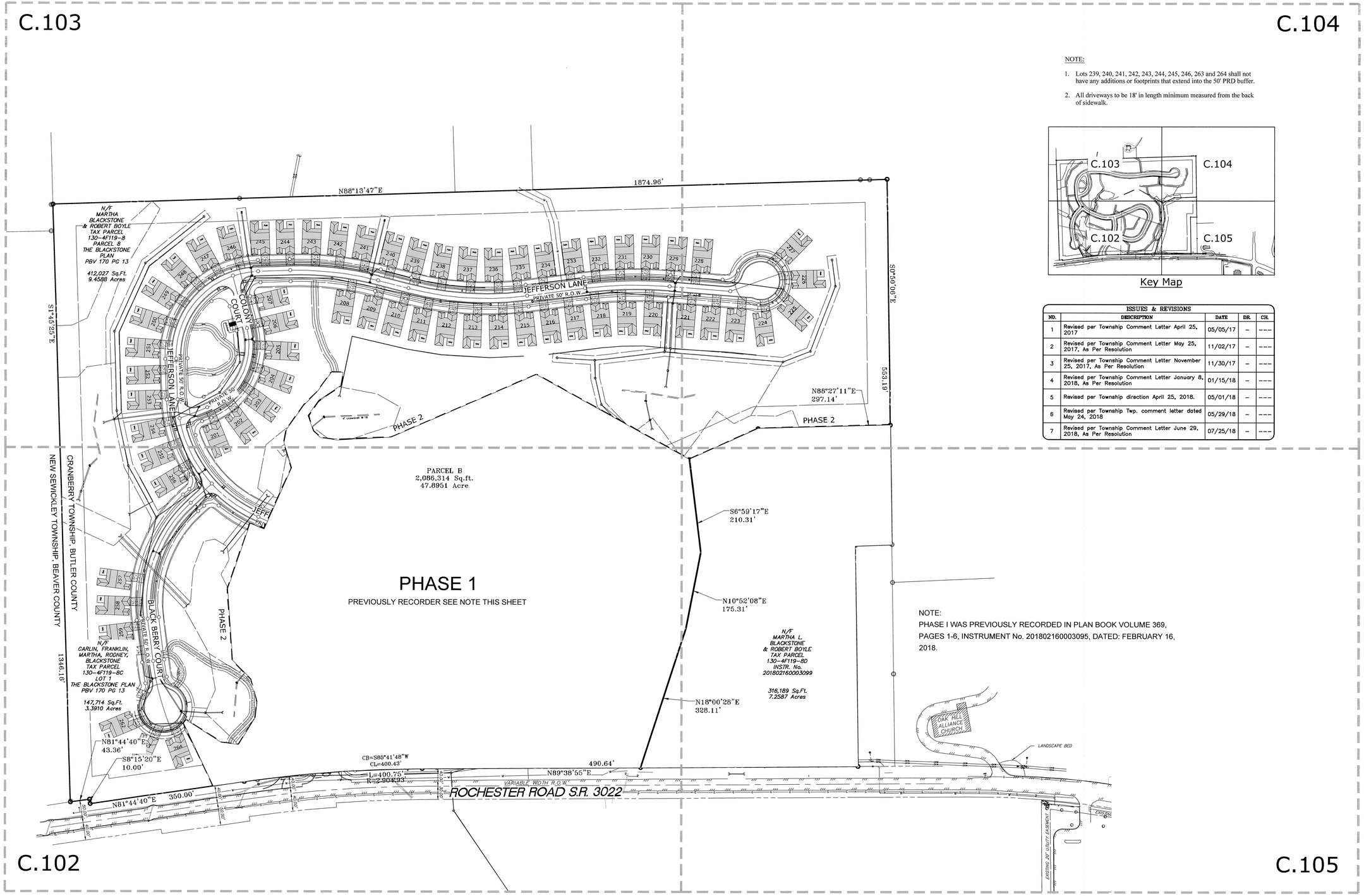

NOTE:

1. Lots 239, 240, 241, 242, 243, 244, 245, 246, 263 and 264 shall not have any additions or footprints that extend into the 50' PRD buffer.
2. All driveways to be 18' in length minimum measured from the back of sidewalk.

Key Map

ISSUES & REVISIONS				
NO.	DESCRIPTION	DATE	DR.	CH.
1	Revised per Township Comment Letter April 25, 2017	05/05/17	-	---
2	Revised per Township Comment Letter May 25, 2017, As Per Resolution	11/02/17	-	---
3	Revised per Township Comment Letter November 25, 2017, As Per Resolution	11/30/17	-	---
4	Revised per Township Comment Letter January 8, 2018, As Per Resolution	01/15/18	-	---
5	Revised per Township direction April 25, 2018.	05/01/18	-	---
6	Revised per Township Twp. comment letter dated May 24, 2018	05/29/18	-	---
7	Revised per Township Comment Letter June 29, 2018, As Per Resolution	07/25/18	-	---

NOTE:
PHASE I WAS PREVIOUSLY RECORDED IN PLAN BOOK VOLUME 369, PAGES 1-6, INSTRUMENT No. 201802160003095, DATED: FEBRUARY 16, 2018.

PLAN BOOK	PAGE
373	6

REGISTERED PROFESSIONAL MARK B. SCHMIDT LAND SURVEYOR PENNSYLVANIA

HAMPTON TECHNICAL ASSOCIATES, INC.
ENGINEERING LAND SURVEYORS
ESTABLISHED 1960
www.Hampton-Technical.com
email@hampton-technical.com

☐ Corporate Office
Etna Technical Center
35 Wilson Street, Suite 201
Pittsburgh, PA 15223
PHONE: (412) 781-9660
FAX: (412) 781-5904

☒ Mars Office
123 Ridge Road, Suite B
Valencia, PA 16059
PHONE: (724) 625-4544
FAX: (724) 625-4549

DRAWN BY: JEC
CHECKED BY: APH
APPROVED BY: MBS
CAD FILE: 11332-1 Recording PHASE 2.dwg

TITLE: T.O.A. Cranberry – PRD
Overall Site Plan of Recording
Cranberry Township, Butler County, Pennsylvania

CLIENT: T.O.A. Cranberry L.L.C.
201 King of Prussia Road, Suite 370, Radnor, PA 19067

DATE ISSUED: April 2017
HORIZONTAL SCALE: 1" = 100'
VERTICAL SCALE: –
SHEET: C.106
HTA PROJECT #: 11332-1

X:\18-XXXX Jobs\18-11300 Jobs\18-11332-1\Production Drawings\11332-1 Recording PHASE 2.dwg, C.106 Overall Site Plan Of Recording, 8/9/2018 10:51 AM

Instr 201808310018024 08/31/2018
Pages:2 $85.00
Michele Musiello T20180012814
Butler County Recorder FL

Longtree Way

Proposed Mountable Curb w/ Concrete Island

60' R/W

Pedestrian Pocket "F"

Pedestrian Pocket "E"

Sanitary Sewer Easement

Ex. Storm Sewer Esmt.

Ex. 20' Pedestrian & Utility Easement for Trail System (to be removed)

Ex. San MH

Ex. Manhole

Existing 20' Storm Sewer Easement

Parcel G N/F VC Woods Associates, LP Tax ID# 130-4F44-35AV

Existing Walking Trail

Existing Wood Guiderail

Ex. 20' Pedestrian & Utility Easement for Trail System

Pedestrian & Utility Easement for Trail System

Existing Wood Foot Bridge

Existing Wetlands

Parcel F N/F Rockwell Cranberry, LLC Tax ID# 130-4F44-35AU

Ex. Conservation and Drainage Easement Inst.# 201508280019080

20' Private Storm Sewer Easement

Existing 20' Sanitary Sewer Easement

20' Private Storm Sewer Easement

Existing 20' Storm Sewer Easement (to be removed)

20' Private Storm Sewer Easement

20' Private Storm Sewer Easement

Existing 20' Storm Sewer Easement (to be removed)

20' Sanitary Sewer Easement

20' Private Storm Sewer Easement

Existing 20' Storm Sewer Easement (to be removed)

20' Private Storm Sewer Easement

20' Private Storm Sewer Easement

20' Private Storm Sewer Easement

Existing 20' Storm Sewer Easement (to be removed)

20' Private Storm Sewer Easement

20' Private Storm Sewer Easement

20' Private Storm Sewer Easement

Ex. Storm Sewer & Utility Easmt.

Existing 20' Storm Sewer Easement (to be removed)

Existing 20' Storm Sewer Easement (to be removed)

Existing 20' Storm Sewer Easement (to be removed)

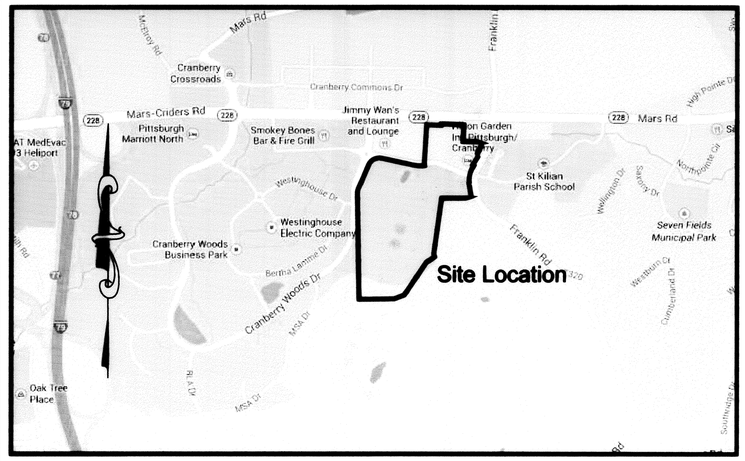

LOCATION MAP SCALE = 1"= 1000'

Utility Companies and Authorities

Sewage Collection	*= Cranberry Sewer and Water*
Sewage Treatment	*= Cranberry Sewer and Water*
Water Service	*= Cranberry Sewer and Water*
Electric Service	*= First Energy - Penn Power*
Gas Service	*= Equitable Gas*
Telephone Service	*= North Pittsburgh Telephone Company*

Zoning Information

Current Zoning -	C-2, SP-1, BPK, R-1 with CCD-2 Overlay
Proposed Zoning Use -	CCD-2 Overlay

Total Plan Area = 7.582 Acres
Total No. of Parcels = 1

	Required
Dwelling Units/ Gross Acre	15
Min. and Max. Commercial Area	10% to 75%
Minimum CCD Open Space	15%
Maximum Impervious Surface	85%
Max. Building Height (Stories)	4 (6 for Hotels)
Min. Building Height (Feet/Stories)	20' or 2 Stories
Front Build to Line	
Residential	6' to 12'
non-Residential	12' to 20'
Min. Building Separation	
Single-Famiit Detached	6'
Attached Dwellings	12'
Multi-Family Dwellings	12'
non-Residential Buildings	20'

Proposed Use

Continuing Care / Personal Care Facility — 226,550± Sq.ft. (including garage area)

Parking Requirements

Required	136 Spaces	
Proposed	43	Garage Parking Spaces
	97	Parking Lot Spaces
	140	Total Site Spaces
	4	Accessible Spaces
	1	Van Accessible Space

Open Space within Parcel

Pedestrian Pocket "F"	750± sq.ft.
Pedestrian Pocket "G"	2036± sq.ft.

Owners' Adoption

By resolution approved by FDG CB PROPCO, LLC, a Delaware limited liability company, the owner of the land shown on the Revised Village of Cranberry Woods – CCD (2015) – Phase 2A, adopted this plan as its plan of lots and irrevocably dedicated all streets and other property identified for dedication on the plan to the public. Owner hereby covenants and agrees to and by these presents does release and forever discharge said Commonwealth of Pennsylvania, County of Butler and Township of Cranberry, their successors or assigns from any liability for damages arising and to arise from the appropriation of said ground for public streets or property and the physical grading thereof to any grades that may be established. This adoption and dedication shall be binding upon the company and upon its successors and assigns.

OWNER:

FDG CB PROPCO, LLC, a Delaware limited liability company

By: FDG Development Investors XVI, LLC, its Managing Member

By: Formation Development Group, LLC, its Manager

By: Argos Senior Living, LLC, its Manager

By: Mark T. Spiegel
Mark T. Spiegel, President

Acknowledgment of Company Adoption and Dedication

Before me, the undersigned Notary Public in and for the State of Georgia and County/City of Fulton, Georgia *, personally appeared Mark T. Spiegel, President of Argos Senior Living, LLC, the Manager of Formation Development Group, LLC, the Manager of FDG Development Investors XVI, LLC, the Managing Member FDG CB PROPCO, LLC, a Delaware limited liability company, who stated that he is authorized to execute the above adoption, dedication and plan on behalf of the company and affirms that the company has approved the resolution to adopt the plan and dedicate public property contained therein to the public.*

Witness my hand and notarial seal this 26th *day of June, 2018.*

PAMELA J MARAIO NOTARY PUBLIC

Pamela J Maraio
Notary Public

Certification of Title

Owner hereby certifies that the title to the property contained in the Revised Village of Cranberry Woods – CCD (2015) – Phase 2A is in the name of FDG CB PROPCO, LLC, a Delaware limited liability company and is recorded in Instrument #_____. Owner further certifies that there is no mortgage or monetary lien against this property.

Witness

OWNER:

FDG CB PROPCO, LLC, a Delaware limited liability company

By: FDG Development Investors XVI, LLC, its Managing Member

By: Formation Development Group, LLC, its Manager

By: Argos Senior Living, LLC, its Manager

By: Mark T. Spiegel
Mark T. Spiegel, President

Cranberry Township Board of Supervisors

Approved by the Board of Supervisors of the Township of Cranberry by Ordinance/Resolution No. 2018-30 *, effective this* 2nd *day of* July *, 2018.*

Secretary — *Chairman, Board of Supervisors*

Cranberry Township - Township Manager

I, Terry Andree *, Township Manager for the Township of Cranberry, certify that the conditions for final approval outlined in Ordinance/Resolution No.* 2018-29 *have been met in accordance with Section 22-305 and 22-307 of the Township of Cranberry Code or Ordinances, as amended.*

Township Manager

Cranberry Township Municipal Engineer

I, Jason Kratsas *, a Registered Professional Engineer, the Township Engineer of the Township of Cranberry, do hereby certify that this Subdivision Plan meets all the engineering and design requirements of the Township Subdivision and Zoning Ordinance, except as departures have been authorized by the approval authority.*

7/13/18
Date

Signature
Registration # PE071353

Surveyor's Certification

I certify that, to the best of my knowledge, that the survey and plan shown hereon correctly represents the lots, lands, streets and highways as surveyed and plotted by me.

6-26-2018
Date

Mark B. Schmidt
Registration # 36950-E

Butler County Planning Commission

Reviewed by the Butler County Planning Commission on this 5TH *day of* APRIL *, 2018.*

Secretary — *Chairman, Butler County Planning Commission*

Proof of Recording

Recorded in the office of the Recorder of Deeds of the County of Butler, Commonwealth of Pennsylvania, in Plan Book Volume 373 *, Page(s)* 7-8 *.*

Given under my hand and seal this 31 *day of* August *, 2018.*

MICHELE M. MUSTELLO
RECORDER OF DEEDS
My Commission Expires First Monday in January 2020

Recorder of Deeds

Waiver Requests

Waiver to Chapter 17 RD-6 RD-7, and RD-25 which require typical designs for internal streets, local commercial streets with parallel parking, and boulevards/parkways Proposing - RD-6 (Modified) One Way; 16' Cartway, 8" Concrete Curbs, 5'-4" Vegetation Strip and 6' Concrete Sidewalks, RD-7 (Modified) Parking On One Side; parallel parking along one- side of street where t he 6'Concrete sidewalk is to be moved adjacent to parking spaces, RD-7(Modified) Parking On Both Sides; parallel parking along both sides of street where the 6' concrete sidewalk is to be moved adjacent to parking spaces, RD-25 (Modified) Parking On Both Sides; parallel parking along both sides of street where the 6' concrete sidewalk is to be moved adjacent to parking spaces.

Justification - There is currently no typical street cross section that shows parallel parking along one side or both sides of the street. Also, by moving the sidewalks, it allows pedestrian traffic from parked vehicles to have a more comfortable and direct route to the sidewalk.

Cranberry Township Board of Supervisors	Cranberry Township Municipal Engineer	Butler County Planning Commission	Butler County Recorder of Deeds Office

COMMONWEALTH OF PENNSYLVANIA REGISTERED PROFESSIONAL MARK B. SCHMIDT LAND SURVEYOR SU-36950-E

HAMPTON TECHNICAL ASSOCIATES
ENGINEERING LAND SURVEYORS
ESTABLISHED 1960
www.hampton-technical.com

☐ Corporate Office
Etna Technical Center
35 Wilson Street, Suite 201
Pittsburgh, PA 15223
PHONE: (412) 781-9660
FAX: (412) 781-5904

☒ Mars Office
123 Ridge Road, Suite B
Valencia, PA 16059
PHONE: (724) 625-4544
FAX: (724) 625-4549

DATE ISSUED: February 6, 2018
PROJECT STATUS: as per Resolution Plan

REVISIONS:

NO.	DESCRIPTION	DATE:
1	Address Municipal Comments	3-08-2018
2	Address Owner and Municipal Comments	4-09-2018
3	As per Resolution Plan	5-08-2018

DRAWING ORIENTATION

PROJECT TITLE:
Revised Village of Cranberry Woods - CCD (2015)
Revised Final Land Development - Phase 2A
Plan for Recording

CLIENT ADDRESS:
VC Woods Associates, LP
2801 Liberty Avenue
Pittsburgh, PA 15222

PROJECT LOCATION:
Cranberry Township
Butler County, Pennsylvania

DRAWN BY:	CHECKED BY:
Mal	

CAD FILE: 12367 Parcel A Final.dwg

HORZ. SCALE:	VERT. SCALE:
1" = 30'	-

SHEET: — OF
REC.2
PROJECT #: 12367

PLAN BOOK	PAGE
373	8

X:\18-XXXX Jobs\18-12000 Jobs\18-12367\Production Drawings\12367 Parcel A Final.dwg, REC2, 6/25/2018 2:50 PM, Mark Lawrick

Instr:201809500019180 09/05/2018 10:58RM
Pages:2 F:$85.00
Michele Mustello T20180012939
Butler County Recorder FL

AREA TABULATION OF PROPERTY

PROPERTY OWNER	ADDRESS	TAX PARCEL	EXISTING AREA	AREA AFTER CONVEYANCE
ESTATE OF DORIS J. ZIMINSKI	213 REIBER ROAD	120-3F49-A2C	5.84 ACRES	1.44 ACRE
TERRY A. ZIMINSKI & TERRY L. PIERCE	213A REIBER ROAD	120-3F49-A2CB	2.55 ACRES	4.14 ACRES
SCOTT B. & BRENDA J. McCUE	211 REIBER ROAD	120-3F49-A2CA	1.98 ACRE	4.79 ACRES
		TOTAL	10.37 ACRES	10.37 ACRES

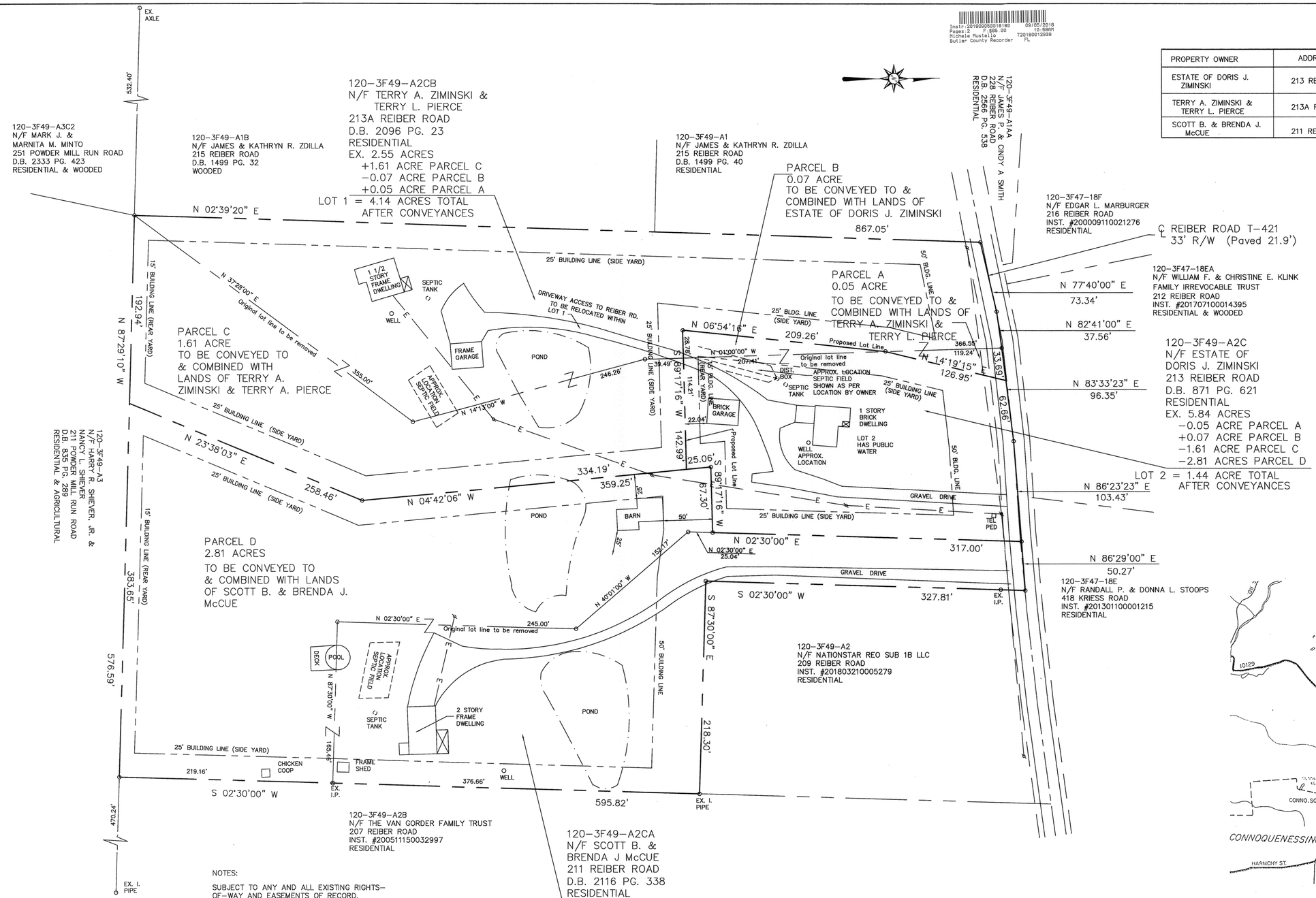

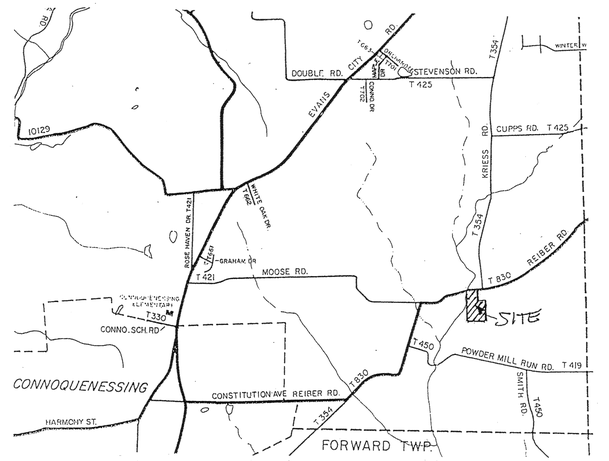

VICINITY MAP Scale: 1" = 2000'

NOTES:

SUBJECT TO ANY AND ALL EXISTING RIGHTS-OF-WAY AND EASEMENTS OF RECORD.

FLOOD DATA NOT AVAILABLE.

PROPERTY OWNERS: TERRY A. ZIMINSKI & TERRY L. PIERCE
213A REIBER ROAD
RENFREW, PA 16053

ESTATE OF DORIS J. ZIMINSKI
213 REIBER ROAD
RENFREW, PA 16053

SCOTT B. & BRENDA J. McCUE
211 REIBER ROAD
RENFREW, PA 16053

THE PURPOSE OF THIS PLAN IS A LOT LINE REVISION TO REVISE BOUNDARIES BETWEEN ADJACENT PROPERTIES. NO NEW BUILDING LOTS ARE CREATED BY THIS PLAN.

LOTS 1 AND 3 WILL SHARE EQUALLY IN THE MAINTENANCE OF THE POND WHICH STRADDLES THE BOUNDARY LINE BETWEEN THE PROPERTIES.

0 50 100 150

PLAN BOOK	PAGE
373	9

REVISED: 06/18/18; ENGINEER'S REVIEW COMMENTS

Land Surveyors, Inc.
523 North Main Street
P.O. Box 1061
Butler, PA 16003-1061
(724) 287-6865
Cheryl A. Hughes, PLS Owner

LOT LINE REVISION
FOR: TERRY A. ZIMINSKI & TERRY L. PIERCE, ESTATE OF DORIS J. ZIMINSKI and SCOTT B. & BRENDA J. McCUE
SITUATE: CONNOQUENESSING TWP., BUTLER CO., PA

Date 06/05/18	Scale 1" = 50'	Dwn By BEC	Ckd By CAH		
Parcel# 120-3F49-A2C, A2CB, A2CA		Db-Pg 2096-23, 871-621, 2116-338		Service No. 18-032	
Address 213, 213A, 211 REIBER RD.					

KNOW ALL MEN BY THESE PRESENTS, that we, Terry A. Ziminski and Terry L. Pierce, of the Township of Connoquenessing, County of Butler, and Commonwealth of Pennsylvania, for ourselves, our heirs, executors, administrators and assigns, do hereby adopt this plan as our Plan of Subdivision of our property, situate in the Township of Connoquenessing, County of Butler and Commonwealth of Pennsylvania, and for divers advantages accruing to us, do hereby dedicate forever, for public use for highway, drainage, sewage and utility purposes, all drives, roads, streets, lands, rights-of-way, easements, ways and other public highways shown upon the plan, with the same force and effect as if the same had been opened through legal proceedings and in consideration of this approval of said plan and any future acceptance of said public highways, right-of-way and easements by said County of Butler and Township of Connoquenessing, we, Terry A. Ziminski and Terry L. Pierce, hereby agree to and by these presents do release and forever discharge said County of Butler and said Township of Connoquenessing, their successors or assigns, from any liability for damages arising and to arise from the appropriation of said ground for public highways, and other public uses and the physical grading thereof to any grades that may be established. This dedication and release shall be binding upon Terry A. Ziminski and Terry L. Pierce, our heirs, executors, administrators and assigns and purchasers of lots in this plan.

IN WITNESS WHEREOF, we hereunto set our hands and seals

this 10th day of July, 2018.

ATTEST:

OWNER (SEAL) OWNER

(SEAL)
NOTARY PUBLIC

My Commission Expires the 06th day of MARCH, A.D., 2020.

The foregoing adoption and dedication is made by Terry A. Ziminski and Terry L. Pierce with the full understanding and agreement that the approval of the Board of Supervisors of the Township of Connoquenessing, if hereto attached, will become null and void unless this plan is recorded in the Recorder of Deeds Office of Butler County, County Court House, Butler, Pennsylvania, within ninety (90) days of date of said approval.

COMMONWEALTH OF PENNSYLVANIA:
: SS:
COUNTY OF BUTLER :

Before me, the subscriber, a Notary Public in and for said Commonwealth and County, personally appeared the above named Terry A. Ziminski and Terry L. Pierce, and acknowledged the foregoing Release and Dedication and Plan to be their act and deed and desired the same to be recorded as such.

WITNESS MY HAND AND NOTARIAL SEAL THIS 10th DAY OF July, 2018.

NOTARY PUBLIC

COMMONWEALTH OF PENNSYLVANIA
NOTARIAL SEAL
Darrin J. Nichter, Notary Public
Center Twp., Butler County
My Commission Expires March 6, 2020
MEMBER, PENNSYLVANIA ASSOCIATION OF NOTARIES

KNOW ALL MEN BY THESE PRESENTS, THAT we, Terry A. Ziminski and Terry L. Pierce, of the Township of Connoquenessing, County of Butler, Commonwealth of Pennsylvania, for ourselves, our heirs, executors, administrators and assigns, and for our grantees and their subsequent purchasers, do hereby accept full and complete responsibility, liability, expense and provision of facilities for the control of storm water drainage over, across and through this subdivision of land until such time as we, our heirs, executors, administrators and assigns construct storm water drainage facilities in accordance with Township specifications and requirements and the same is officially accepted by action of the Board of Supervisors and until such formal acceptance we for ourselves, our heirs, executors, administrators and assigns do hereby release the Township of Connoquenessing from any responsibility in connection therewith. This acceptance of responsibility shall be binding upon Terry A. Ziminski and Terry L. Pierce, our heirs, executors, administrators and assigns, and all purchasers of lots in this plan of subdivision.

IN WITNESS WHEREOF, we hereunto set our hands and seals

this 10th day of July, A.D., 2018.

ATTEST:

OWNER OWNER

WITNESS My hand and notarial seal this 10th day of July, A.D., 2018.

NOTARY PUBLIC

My Commission Expires the 06th day of MARCH, A.D., 2020.

KNOW ALL MEN BY THESE PRESENTS, that I, Terry A. Ziminski, Executor of the Estate of Doris J. Ziminski, of the Township of Connoquenessing, County of Butler, and Commonwealth of Pennsylvania, for myself, my heirs, executors, administrators and assigns, do hereby adopt this plan as my Plan of Subdivision of my property, situate in the Township of Connoquenessing, County of Butler and Commonwealth of Pennsylvania, and for divers advantages accruing to me, do hereby dedicate forever, for public use for highway, drainage, sewage and utility purposes, all drives, roads, streets, lands, rights-of-way, easements, ways and other public highways shown upon the plan, with the same force and effect as if the same had been opened through legal proceedings and in consideration of this approval of said plan and any future acceptance of said public highways, right-of-way and easements by said County of Butler and Township of Connoquenessing, I, Terry A. Ziminski, Executor of the Estate of Doris J. Ziminski, hereby agree to and by these presents do release and forever discharge said County of Butler and said Township of Connoquenessing, their successors or assigns, from any liability for damages arising and to arise from the appropriation of said ground for public highways, and other public uses and the physical grading thereof to any grades that may be established. This dedication and release shall be binding upon Terry A. Ziminski, Executor of the Estate of Doris J. Ziminski, my heirs, executors, administrators and assigns and purchasers of lots in this plan.

IN WITNESS WHEREOF, I hereunto set my hand and seal

this 10th day of July, 2018.

ATTEST:

(SEAL)
EXECUTOR - TERRY A. ZIMINSKI

(SEAL)
NOTARY PUBLIC

My Commission Expires the 06th day of MARCH, A.D., 2020.

The foregoing adoption and dedication is made by Terry A. Ziminski, Executor of the Estate of Doris J. Ziminski, with the full understanding and agreement that the approval of the Board of Supervisors of the Township of Connoquenessing, if hereto attached, will become null and void unless this plan is recorded in the Recorder of Deeds Office of Butler County, County Court House, Butler, Pennsylvania, within ninety (90) days of date of said approval.

COMMONWEALTH OF PENNSYLVANIA:
: SS:
COUNTY OF BUTLER :

Before me, the subscriber, a Notary Public in and for said Commonwealth and County, personally appeared the above named Terry A. Ziminski, Executor of the Estate of Doris J. Ziminski, and acknowledged the foregoing Release and Dedication and Plan to be his act and deed and desired the same to be recorded as such.

WITNESS MY HAND AND NOTARIAL SEAL THIS 10th DAY OF July, 2018.

NOTARY PUBLIC

COMMONWEALTH OF PENNSYLVANIA
NOTARIAL SEAL
Darrin J. Nichter, Notary Public
Center Twp., Butler County
My Commission Expires March 6, 2020
MEMBER, PENNSYLVANIA ASSOCIATION OF NOTARIES

KNOW ALL MEN BY THESE PRESENTS, THAT I, Terry A. Ziminski, Executor of the Estate of Doris J. Ziminski, of the Township of Connoquenessing, County of Butler, Commonwealth of Pennsylvania, for myself, my heirs, executors, administrators and assigns, and for my grantees and their subsequent purchasers, do hereby accept full and complete responsibility, liability, expense and provision of facilities for the control of storm water drainage over, across and through this subdivision of land until such time as I, my heirs, executors, administrators and assigns construct storm water drainage facilities in accordance with Township specifications and requirements and the same is officially accepted by action of the Board of Supervisors and until such formal acceptance I for myself, my heirs, executors, administrators and assigns do hereby release the Township of Connoquenessing from any responsibility in connection therewith. This acceptance of responsibility shall be binding upon Terry A. Ziminski, Executor of the Estate of Doris J. Ziminski, our heirs, executors, administrators and assigns, and all purchasers of lots in this plan of subdivision.

IN WITNESS WHEREOF, I hereunto set my hand and seal

this 16th day of July, A.D., 2018.

ATTEST:

EXECUTOR - TERRY A. ZIMINSKI

WITNESS My hand and notarial seal this 16th day of July, A.D., 2018.

NOTARY PUBLIC

My Commission Expires the 06th day of MARCH, A.D., 2020.

KNOW ALL MEN BY THESE PRESENTS, that we, Scott B. and Brenda J. McCue, of the Township of Connoquenessing, County of Butler, and Commonwealth of Pennsylvania, for ourselves, our heirs, executors, administrators and assigns, do hereby adopt this plan as our Plan of Subdivision of our property, situate in the Township of Connoquenessing, County of Butler and Commonwealth of Pennsylvania, and for divers advantages accruing to us, do hereby dedicate forever, for public use for highway, drainage, sewage and utility purposes, all drives, roads, streets, lands, rights-of-way, easements, ways and other public highways shown upon the plan, with the same force and effect as if the same had been opened through legal proceedings and in consideration of this approval of said plan and any future acceptance of said public highways, right-of-way and easements by said County of Butler and Township of Connoquenessing, we, Scott B. and Brenda J. McCue, hereby agree to and by these presents do release and forever discharge said County of Butler and said Township of Connoquenessing, their successors or assigns, from any liability for damages arising and to arise from the appropriation of said ground for public highways, and other public uses and the physical grading thereof to any grades that may be established. This dedication and release shall be binding upon Scott B. and Brenda J. McCue, our heirs, executors, administrators and assigns and purchasers of lots in this plan.

IN WITNESS WHEREOF, we hereunto set our hands and seals

this 16 day of July, 2018.

ATTEST:

OWNER (SEAL) OWNER

(SEAL)
NOTARY PUBLIC

My Commission Expires the 12 day of Sept, A.D., 2018.

COMMONWEALTH OF PENNSYLVANIA
NOTARIAL SEAL
ROBERT JOHN WHITE
Notary Public
BUTLER TWP., BUTLER COUNTY
My Commission Expires Sep 12, 2018

The foregoing adoption and dedication is made by Scott B. and Brenda J. McCue with the full understanding and agreement that the approval of the Board of Supervisors of the Township of Connoquenessing, if hereto attached, will become null and void unless this plan is recorded in the Recorder of Deeds Office of Butler County, County Court House, Butler, Pennsylvania, within ninety (90) days of date of said approval.

COMMONWEALTH OF PENNSYLVANIA:
: SS:
COUNTY OF BUTLER :

Before me, the subscriber, a Notary Public in and for said Commonwealth and County, personally appeared the above named Scott B. and Brenda J. McCue, and acknowledged the foregoing Release and Dedication and Plan to be their act and deed and desired the same to be recorded as such.

WITNESS MY HAND AND NOTARIAL SEAL THIS 16 DAY OF July, 2018.

NOTARY PUBLIC

COMMONWEALTH OF PENNSYLVANIA
NOTARIAL SEAL
ROBERT JOHN WHITE
Notary Public
BUTLER TWP., BUTLER COUNTY
My Commission Expires Sep 12, 2018

KNOW ALL MEN BY THESE PRESENTS, THAT we, Scott B. and Brenda J McCue, of the Township of Connoquenessing, County of Butler, Commonwealth of Pennsylvania, for ourselves, our heirs, executors, administrators and assigns, and for our grantees and their subsequent purchasers, do hereby accept full and complete responsibility, liability, expense and provision of facilities for the control of storm water drainage over, across and through this subdivision of land until such time as we, our heirs, executors, administrators and assigns construct storm water drainage facilities in accordance with Township specifications and requirements and the same is officially accepted by action of the Board of Supervisors and until such formal acceptance we for ourselves, our heirs, executors, administrators and assigns do hereby release the Township of Connoquenessing from any responsibility in connection therewith. This acceptance of responsibility shall be binding upon Scott B. and Brenda J. McCue, our heirs, executors, administrators and assigns, and all purchasers of lots in this plan of subdivision.

IN WITNESS WHEREOF, we hereunto set our hands and seals

this 16 day of July, A.D., 2018.

ATTEST:

OWNER OWNER

WITNESS My hand and notarial seal this 16 day of July, A.D., 2018.

NOTARY PUBLIC

My Commission Expires the 12 day of Sept, A.D., 2018.

COMMONWEALTH OF PENNSYLVANIA
NOTARIAL SEAL
ROBERT JOHN WHITE
Notary Public
BUTLER TWP., BUTLER COUNTY
My Commission Expires Sep 12, 2018

I, Cheryl A. Hughes, a Registered Surveyor of the State of Pennsylvania, do hereby certify that this plan correctly represents the lots, lands, streets and highways as surveyed and plotted by me for the owners or agents.

SURVEYOR REG. #SU-32490-E June 18, 2018 DATE

COMMONWEALTH OF PENNSYLVANIA
REGISTERED PROFESSIONAL
Cheryl A. Hughes
LAND SURVEYOR
SU-32490-E

HIGHWAY OCCUPANCY PERMIT REQUIREMENT (WHERE STATE ROAD INVOLVED)
This plat requires a Highway Occupancy Permit pursuant to Section 420 of the Act of June 1, 1945 (P.L. 1242, No. 428), known as the "State Highway Law". Approvals of the Connoquenessing Township Planning Commission and Board of Supervisors are conditional, subject to action of the Pennsylvania Department of Transportation pursuant to application for a Highway Occupancy Permit.

The Board of Supervisors of the Township of Connoquenessing, Butler County, Pennsylvania hereby approves this plan of subdivision for recording purposes only. This approval by the Township of Connoquenessing does not constitute an acceptance of the roads, streets, storm and sanitary drainage facilities, easements or rights-of-way, water mains or any other services or improvements shown on this plan, nor an assumption of maintenance responsibility, nor will the same be accepted or maintained until constructed in accordance with all Township specifications and requirements and officially accepted by action of the Board of Supervisors. This approval shall in no way be deemed an authorization to commence construction or related activities. This plan of subdivision approved by resolution of the Board of Supervisors of the Township of Connoquenessing, Butler County, Pennsylvania, on this 5th day of July, 2018.

ATTEST:

SECRETARY CHAIRMAN

SEAL:

Reviewed and approved by the Connoquenessing Township Planning Commission this 5th day of July, 2018.

SECRETARY CHAIRMAN

SEAL:

Reviewed with comments by the Butler County Planning Commission at a meeting held this 7TH day of JUNE, 2018. Letter to Connoquenessing Township Board of Supervisors dated 6-7-18, 2018.

SECRETARY CHAIRMAN

BUTLER COUNTY PLANNING COMMISSION

COMMONWEALTH OF PENNSYLVANIA:
: SS:
COUNTY OF BUTLER:

Recorded in the Office for the Recording of Deeds, Plats, etc., in said County, in Plan Book Volume 373, Page 9-10.

Given under my hand and seal this 5 day of September, 2018.

RECORDER OF DEEDS

MICHELE M. MUSTELLO
RECORDER OF DEEDS
My Commission Expires First Monday in January 2020

RECORDER OF DEEDS BUTLER COUNTY, PA

REVISED: 06/18/18; ENGINEER'S REVIEW COMMENTS

Sheet 2 of 2

L S J	Land Surveyors, Inc. 523 North Main Street P.O. Box 1061 Butler, PA 16003-1061 (724) 287-6865 Cheryl A. Hughes, PLS Owner

LOT LINE REVISION
FOR: TERRY A. ZIMINSKI & TERRY L. PIERCE,
ESTATE OF DORIS J. ZIMINSKI
and
SCOTT B. & BRENDA J. McCUE

SITUATE: CONNOQUENESSING TWP., BUTLER CO., PA

Date 06/05/18	Scale 1" = 50'	Dwn By BEC	Ckd By CAH
Parcel#120-3F49-A2C, A2CB, A2CA	Db-Pg 2096-23, 871-621, 2116-338		Service No. 18-032
Address 213, 213A, 211 REIBER RD.			

PLAN BOOK	PAGE
373	10

FINAL LAND DEVELOPMENT PLAN
WESSEX CORPORATION
RENICK BROTHERS PROPOSED WAREHOUSE
SLIPPERY ROCK TOWNSHIP, BUTLER COUNTY, PENNSYLVANIA
JUNE 2018

APPROVED BY THE SLIPPERY ROCK TOWNSHIP PLANNING COMMISSION THIS 9th DAY OF July, 2018.

Vonnie J. Hogg
SECRETARY

Roy Frazier
VICE CHAIRMAN

THE BOARD OF SUPERVISORS OF THE TOWNSHIP OF SLIPPERY ROCK HEREBY GIVES PUBLIC NOTICE THAT IN APPROVING THIS PLAN FOR RECORDING PURPOSES ONLY. THE TOWNSHIP OF SLIPPERY ROCK ASSUMES NO OBLIGATIONS, LEGAL OTHERWISE, EXPRESSED OR IMPLIED, EITHER TO ACCEPT SAID STREETS AS TOWNSHIP STREETS, OR ROADS, OR GRADES, PAVE AND CURB THE STREETS IN SAID PLAN, OR TO CONSTRUCT SEWERS THEREIN OR TO INSTALL ANY OTHER SUCH SERVICE ORDINARILY INSTALLED IN TOWNSHIP STREETS OR ROADS.

APPROVED BY THE BOARD OF SUPERVISORS OF THE TOWNSHIP OF SLIPPERY ROCK THIS 9th DAY OF July, 2018.

Karen M. Connelly
SECRETARY

Paul A. Dick
CHAIRMAN, BOARD OF SUPERVISORS

SUPERVISOR

I, JAMES R. BRUGGEMAN, A PROFESSIONAL LAND SURVEYOR OF THE COMMONWEALTH OF PENNSYLVANIA, DO HEREBY CERTIFY, TO THE BEST OF MY KNOWLEDGE, INFORMATION AND BELIEF, THAT THIS PLAN CORRECTLY REPRESENTS THE LOTS, LANDS, STREETS, AND HIGHWAYS AS SURVEYED AND PLOTTED BY ME FOR THE OWNERS AND OR AGENTS.

COMMONWEALTH OF PENNSYLVANIA — REGISTERED PROFESSIONAL — JAMES R. BRUGGEMAN — LAND SURVEYOR NO. 51772-E — PENNSYLVANIA

8/28/18
DATE

REG. NO. 51772-E

REVIEWED BY THE BUTLER COUNTY PLANNING COMMISSION THIS 18th DAY OF APRIL, 2018

SECRETARY

CHAIRMAN

BUTLER COUNTY PLANNING COMMISSION

KNOWN ALL MEN BY THESE PRESENTS, THAT (I OR WE), Renick Brothers HEREBY ACCEPT THIS PLAN CONTAINING 10.9 ACRES OF DEVELOPMENT WITHIN PARCEL ID #280-4F07-A3 (RENICK BROTHERS CONSTRUCTION COMPANY SITUATED IN SLIPPERY ROCK TOWNSHIP, COUNTY OF BUTLER, COMMONWEALTH OF PENNSYLVANIA.

WITNESS

OWNER

RECORDER OF DEEDS — BUTLER COUNTY, PA

COMMONWEALTH OF PENNSYLVANIA) SS:
COUNTY OF BUTLER)

BEFORE ME, THE SUBSCRIBER, A NOTARY PUBLIC IN AND FOR SAID COMMONWEALTH AND COUNTY, PERSONALLY APPEARED ABOVE NAMED Adam M Renick A PARTNER OF Renick Brothers Construction Co AND ACKNOWLEDGE THE FOREGOING RELEASE AND DEDICATION AND PLAN TO BE OUR ACT AND DEED AND DESIRE THE SAME TO BE RECORDED AS SUCH.

SWORN AND SUBSCRIBED BEFORE ME THIS DAY.

WITNESS MY HAND AND SEAL THIS 5th DAY OF September 2018.

MY COMMISSION EXPIRES THE 3rd DAY OF December 2021.

NOTARY PUBLIC

Commonwealth of Pennsylvania - Notary Seal
Russell G. Hague, Notary Public
Butler County
My commission expires December 3, 2021
Commission number 1280584
MEMBER, PENNSYLVANIA ASSOCIATION OF NOTARIES

Instr: 201809060018233 09/06/2018
Pages: 2 F: $85.00 10:56PM
Michele Mustello T20180013013
Butler County Recorder ND

ZONING INFORMATION	
SITE ZONING CLASSIFICATION (INCLUDING ADJACENT PROPERTIES):	RC-1 RURAL CONSERVATION W/SUBURBAN DENSITY OVERLAY
CONDITIONAL USE:	LIGHT INDUSTRIAL
PARCEL ID:	280-4F07-A3
PARCEL ACREAGE:	60.19 ACRES
LIMIT OF DISTURBANCE	10.5 ACRES

BUILDING SETBACK REQUIREMENTS		
SETBACK TYPE	REQUIRED	PROVIDED
FRONT YARD	50'	1,393'
SIDE YARD	*35'	1,361'/1,408'
REAR YARD	*35'	1,489'

* ADDITIONAL 25' IF ABUTTING RESIDENTIAL PROPERTY

PARKING REQUIREMENTS					
BUILDING USE	BUILDING GROSS SF	EMPLOYEES	SLIPPERY ROCK TOWNSHIP ZONING ORDINANCE CHAPTER 27: SECTION 407 OFF-STREET LOADING AND PARKING	PARKING SPACES REQUIRED	PARKING SPACES PROVIDED
WAREHOUSE/OFFICE	26,524	5	1 PER EMPLOYEE ON THE LARGEST SHIFT, PLUS 1 VISITOR SPACE PER EACH 10,000 SF OF GROSS FLOOR AREA	8	10

BUILDING FOOTPRINT AREA (SF)	
TOTAL	26,524

HIGHWAY OCCUPANCY PERMIT DISCLAIMER

A HIGHWAY OCCUPANCY PERMIT IS REQUIRED PURSUANT TO SECTION 420 OF THE ACT OF JUNE 1, 1945 (P.L.1242, NO.428), KNOWN AS THE "STATE HIGHWAY LAW, " BEFORE DRIVEWAY ACCESS TO A STATE HIGHWAY IS PERMITTED.

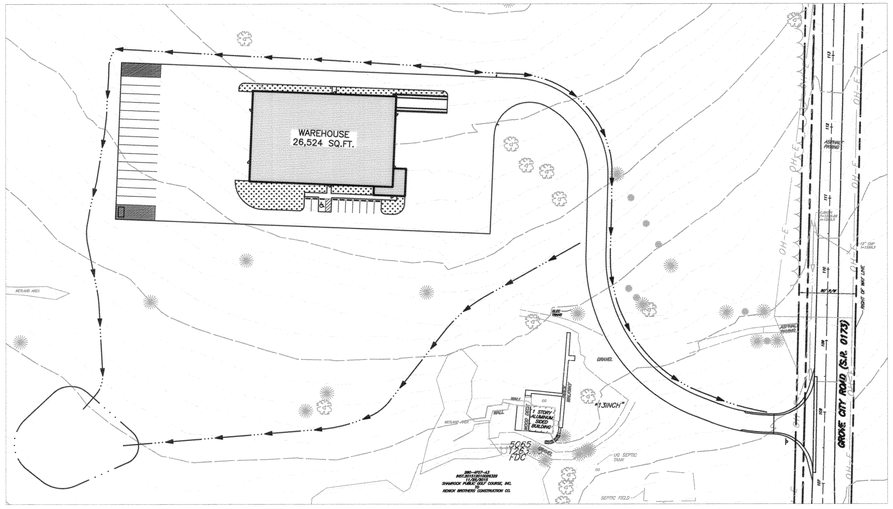

SITE MAP
SCALE: 1" = 200'

BUTLER COUNTY PENNSYLVANIA
RECORDED IN THE RECORDERS OFFICE OF THE SAID COUNTY ON THIS 6th DAY OF Sept. 20 18 TO PLAN BOOK NO. 373 PGS 11-12
WITNESS MY HAND AND THE SEAL OF SAID OFFICE.
RECORDER

MICHELE M. MUSTELLO
RECORDER OF DEEDS
My Commission Expires First Monday in January 2020

PLAN BOOK	PAGE
373	11

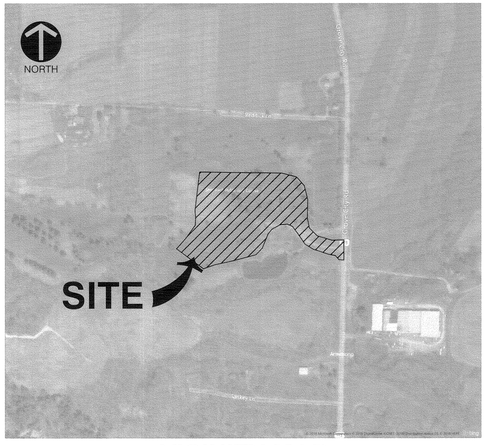

VICINITY MAP
BASE IMAGE FROM BING MAPS
IMAGERY ACCESSED MARCH 2018
1"=500'

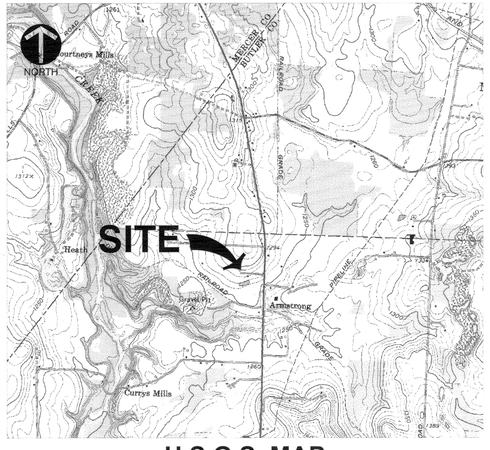

U.S.G.S. MAP
U.S.G.S. 7.5 MIN. TOPOGRAPHIC MAP,
SLIPPERY ROCK, PA. QUADRANGLE,
DATED: 1961, PHOTOREVISED: 1970, PHOTOINSPECTED 1977
1"=2,000'

Sheet List Table

Sheet Number	Sheet Title
C000	TITLE SHEET
C001	GENERAL NOTES
C100	EXISTING CONDITIONS AND DEMOLITION PLAN
C200	LAYOUT PLAN
C300	GRADING PLAN
C301	SITE SECTIONS AND ROADWAY PROFILE
C400	STORMWATER MANAGEMENT PLAN
C401	STORMWATER MANAGEMENT PROFILES
C402	STORMWATER MANAGEMENT NOTES
C500	UTILITY PLAN
C700	LANDSCAPE PLAN
C701	LANDSCAPE NOTES AND DETAILS
C800	SITE DETAILS
C801	SITE DETAILS
C802	SITE DETAILS
C803	SITE DETAILS
C804	SITE DETAILS
C900	EROSION AND SEDIMENTATION CONTROL PLAN
C901	EROSION AND SEDIMENTATION CONTROL NOTES
C902	EROSION AND SEDIMENTATION CONTROL DETAILS
C903	EROSION AND SEDIMENTATION CONTROL DETAILS
C904	EROSION AND SEDIMENTATION CONTROL DETAILS
C905	CONSTRUCTION SEQUENCE

SUPPLEMENTAL DRAWINGS

Sheet Number	Sheet Title
A200	EXTERIOR ELEVATIONS
HOP-1	TITLE SHEET, NOTES, LOCATION MAP
HOP-2	SHORT TERM TRAFFIC CONTROL
HOP-3	CONSTRUCTION PLAN
HOP-4	VEHICLE TRACKING
HOP-5	SITE PLAN

PROJECT TEAM

OWNER
RENICK BROTHERS
CONTACT: CRAIG BEATTY
434 GROVE CITY ROAD
SLIPPERY ROCK, PA 16057
PH: (724) 794-4200

SURVEYOR
CIVIL & ENVIRONMENTAL CONSULTANTS, INC.
CONTACT: DONALD G. GROESSER, P.L.S.
333 BALDWIN ROAD
PITTSBURGH, PA 15205
PH: (412) 429-2324

DESIGN/BUILDER
WESEX CORPORATION
CONTACT: GREG KOLEDIN
ONE ERIE STREET
WEST MIDDLESEX, PA 16159
PH: (724) 528-2800

CIVIL ENGINEER
CIVIL & ENVIRONMENTAL CONSULTANTS, INC.
CONTACT: STEVE CARUSO
333 BALDWIN ROAD
PITTSBURGH, PA 15205
PH: (412) 275-2962

UTILITY CONTACTS

ELECTRIC SERVICE
WEST PENN POWER
SCOTT CURZI
724-284-3531

CABLE/TELECOMM SERVICE
ARMSTRONG CABLE COMPANY
DAVID DIGIOIA
724-283-0925

REGISTERED PROFESSIONAL ENGINEER — RAY B. SUTHERLAND — ENGINEER — 041435E — COMMONWEALTH OF PENNSYLVANIA

REVISION RECORD

NO	DATE	DESCRIPTION
1	07/17/18	ISSUED FOR CONSTRUCTION

Civil & Environmental Consultants, Inc.
4000 Triangle Lane · Suite 200 · Export, PA 15632
724-327-5200 · 800-899-3610
www.cecinc.com

WESEX CORPORATION
RENICK BROS. - PROPOSED WAREHOUSE
SLIPPERY ROCK TOWNSHIP
BUTLER COUNTY, PENNSYLVANIA

TITLE SHEET

DRAWN BY:	JTL
CHECKED BY:	SEC
PROJECT NO:	172-547
APPROVED BY:	RBS
DATE:	JUNE 25, 2018
DWG SCALE:	1"=50'

DRAWING NO.: C000

P:\2017\172-547\1-CADD\dwg\C0-04 - Design\172547-C001-C000.dwg[C000 TITLE SHEET] LS(8/28/2018 - xxxxxx) - LP: 8/28/2018 4:30 PM

NORTH

MICROMOUND AREA (BY OTHERS)

GRAVEL SURFACE (TYP.)

204 C800 STOP SIGN (TYP.)

EQUIPMENT STAGING AREA

55'

130'

219.8'

22'

6.60'

200'

125'

PROPOSED 26,524 SQ.FT. WAREHOUSE ± F.F.=1299.2

LOADING DOCK, SEE DETAIL 209 ON C800.

139.17'

12.17'

6.00'

HANDICAP PARKING SIGN 204 C800

503 C804 CONCRETE SIDEWALK (TYP.)

8'x14' CONC. DUMPSTER PAD 504 C804

LANDSCAPING/LAWN AREA (TYP.)

PAVING INTERFACE LINE (SEE NOTE 1)

STANDARD PARKING SPACE (TYP.) 207 C800

206 C800 ACCESSIBLE PARKING STALL (TYP.)

ACCESS DRIVE CENTERLINE
PI STA=6+83.59
DELTA=89° 07' 52"
RAD=120.00
LENGTH=186.68
TAN=118.194
CHD BRG=N43° 06' 31"W
CHD DIST=168.41
PC STA=5+65.40
PT STA=7+52.07

7+79

7+52.07 PT Sta

R120.0'

7+00

PROPOSED DRAINAGE CHANNEL (TYP.)

5+65.40 PC Sta

60.0'

28.0'

5+00

4+56.68 PT Sta

412 C803 PROPOSED ACCESS DRIVE

4+00

PROPOSED DRAINAGE CHANNEL

PROPOSED RIPRAP APRON (TYP.)

PROPOSED DRAINAGE CHANNEL

PROPOSED BIORETENTION AREA

WETLAND AREA

WETLAND AREA

WETLAND AREA

ACCESS DRIVE CENTERLINE
PI STA=3+38.82
DELTA=70° 30' 46"
RAD=225.00
LENGTH=276.90
TAN=159.052
CHD BRG=N33° 47' 58"W
CHD DIST=259.76
PC STA=1+79.77
PT STA=4+56.68

ELEC TRANS

GRAVEL

ROCK WALKWAY

WALL

WALL

WOOD DECK

1 STORY ALUMINUM SIDED BUILDING

STEPS

1.3GINCH

WETLAND AREA

5065 1260.45 FDC

GRAVEL

7192 1264.96

UG SEPTIC TANK

377'

280-4F07-A3
INST.201512010026329
11/25/2013
SHAM ROCK PUBLIC GOLF COURSE, INC.
TO
RENICK BROTHERS CONSTRUCTION CO.

POND AREA

ACCESS DRIVE CENTERLINE
PI STA=1+16.78
DELTA=19° 19' 44"
RAD=225.00
LENGTH=75.90
TAN=38.316
CHD BRG=N78° 43' 12"W
CHD DIST=75.54
PC STA=0+78.47
PT STA=1+54.37

1+39.27 PC Sta

1+54.37 PT Sta

1+00

R55.0'

R50.0'

0+00

158.00'

1095' TO NEAREST STREET (SANKEY LN)

913' TO NEAREST STREET (REDDICK LN)

MATCH EXISTING SHOULDER EDGE

GROVE CITY ROAD (S.R. 0173)

HEAVY DUTY ASPHALT 202 C800

INFILTRATION BERM

RIGHT OF WAY LINE

ASPHALT PAVING

CENTERLINE

SIDE YARD SETBACK

8" PVC 1=1256.5

2" I.P. FOUND

1005 1247.50 24" RCP

S 87°23'36" E 1136.43'

N 87°23'36" W 370.50'

S 02°36'24" W 50.00'

N 87°23'36" W 337.80'

2" I.P. FOUND

1/2" I.P. FOUND

1006 1252.93 *2.0IN

1/2" I.P. FOUND

2" I.P. FOUND

280-4F07-A7
INST.201212310037436
12/20/2012
WOLF CREEK PROPERTIES, LLC
TO
KURT B. LIGO & BRETT W. LIGO

LIGO LOT LINE REVISION
P.B.V. 331, PG. 12

FRONT YARD SETBACK

C.BASIN T=1249.66 I=1246.5

12" CMP I=1246.2

80' R/W

RIGHT OF WAY LINE

ASPHALT PAVING

3 HO

115

114

113

112

111

110

109

108

107

OH-E

5419 1286.26 MBX 16 FT INVERT

ELEC TRANS

ASPHALT PAVING

6327 1248.72 MES

12" CMP I=1248.2

LEGEND

- EXISTING PROPERTY LINE
- EXISTING RIGHT-OF-WAY LINE
- EXISTING CENTERLINE OF ROAD
- EXISTING EDGE OF PAVEMENT
- EXISTING EDGE OF GRAVEL
- EXISTING WALKWAY
- EXISTING STRUCTURE
- EXISTING TREE
- EXISTING ELECTRIC
- EXISTING HYDRANT
- EXISTING UTILITY POLE
- OH-E EXISTING OVERHEAD ELECTRIC
- ST EXISTING STORM PIPE
- EXISTING FIRE DEPT CONNECTION
- PROPOSED ASPHALT
- PROPOSED BUILDING
- PROPOSED GRAVEL SURFACE
- PROPOSED INLET
- PROPOSED MANHOLE

NOTES

1. ALL SURFACE MATERIALS SHALL INITIALLY BE IN ACCORDANCE WITH CURRENT CONTRACT DRAWINGS. HOWEVER, SLIPPERY ROCK TOWNSHIP HAS APPROVED A CONDITIONAL REQUIREMENT THAT WOULD ALLOW FOR PARTIAL GRAVEL AND PAVING ON THE SITE IN THE FUTURE. WITHIN 5 YEARS OF COMPLETION OF CONSTRUCTION, THE OWNER SHALL BE RESPONSIBLE FOR PAVING ALL AREAS WITHIN THE SITE, EXCEPT FOR THE EQUIPMENT STAGING AREA. THIS AREA SHALL REMAIN A GRAVEL SURFACE.

REFERENCES

1. EXISTING INFORMATION FROM FIELD SURVEY BY CIVIL & ENVIRONMENTAL CONSULTANTS, INC. DATED 2/16/2018.
2. EXISTING CONTOURS SHOWN OUTSIDE OF CEC'S FIELD SURVEY PER PAMAP PROGRAM LIDAR DATA, 2-FT. INTERVAL, 2006.

PLAN BOOK	PAGE
373	12

ONE CALL SERIAL NO.: 20180532631-000

CALL BEFORE YOU DIG!
PENNSYLVANIA LAW REQUIRES 3 WORKING DAYS NOTICE FOR CONSTRUCTION PHASE AND 10 WORKING DAYS IN DESIGN STAGE—STOP CALL PENNSYLVANIA ONE CALL SYSTEM, INC. 1-800-242-1776

PENNSYLVANIA ACT 38 (1991) REQUIRES NO LESS THAN 3 WORKING DAYS NOTICE NOR MORE THAN 10 WORKING DAYS NOTICE FROM EXCAVATORS WHO ARE ABOUT TO: DIG, DRILL, BLAST, AUGER, BORE, GRADE, TRENCH, OR DEMOLISH WHEN IN THE CONSTRUCTION PHASE. FOR LOCATION REQUESTS IN THE STATE OF PENNSYLVANIA, CALL TOLL FREE 1-800-242-1776. UNDERGROUND UTILITIES HAVE BEEN PLOTTED FROM AVAILABLE INFORMATION AND THE LOCATION MUST BE CONSIDERED APPROXIMATE. OTHER UNDERGROUND UTILITIES MAY EXIST WHICH ARE NOT SHOWN. IT WILL BE THE CONTRACTOR'S RESPONSIBILITY TO ASCERTAIN ALL PHYSICAL LOCATIONS OF UTILITY LINES PRIOR TO THE TIME OF CONSTRUCTION. IN NO WAY SHALL THE CONTRACTOR HOLD THE SURVEYOR RESPONSIBLE FOR ANY UTILITY LOCATION SHOWN ON THIS PLAN.

COMMONWEALTH OF PENNSYLVANIA REGISTERED PROFESSIONAL RAY B. SUTHERLAND LICENSE 041436E SURVEYOR

REVISION RECORD

NO	DATE	DESCRIPTION

CEC
Civil & Environmental Consultants, Inc.
4000 Triangle Lane · Suite 200 · Export, PA 15632
724-327-5200 · 800-899-3610
www.cecinc.com

WESEX CORPORATION
RENICK BROS. - PROPOSED WAREHOUSE
SLIPPERY ROCK TOWNSHIP
BUTLER COUNTY, PENNSYLVANIA

LAYOUT PLAN

DATE:	JUNE 25, 2018
DRAWN BY:	JTL
DWG SCALE:	1"=50'
CHECKED BY:	SEC
PROJECT NO:	172-547
APPROVED BY:	RBS

DRAWING NO.: C200

P:\2017\172-547\~DWG\Dwg\C200.dwg 8/7/2018 10:29 AM - LP: 7/5/2018 10:29 AM

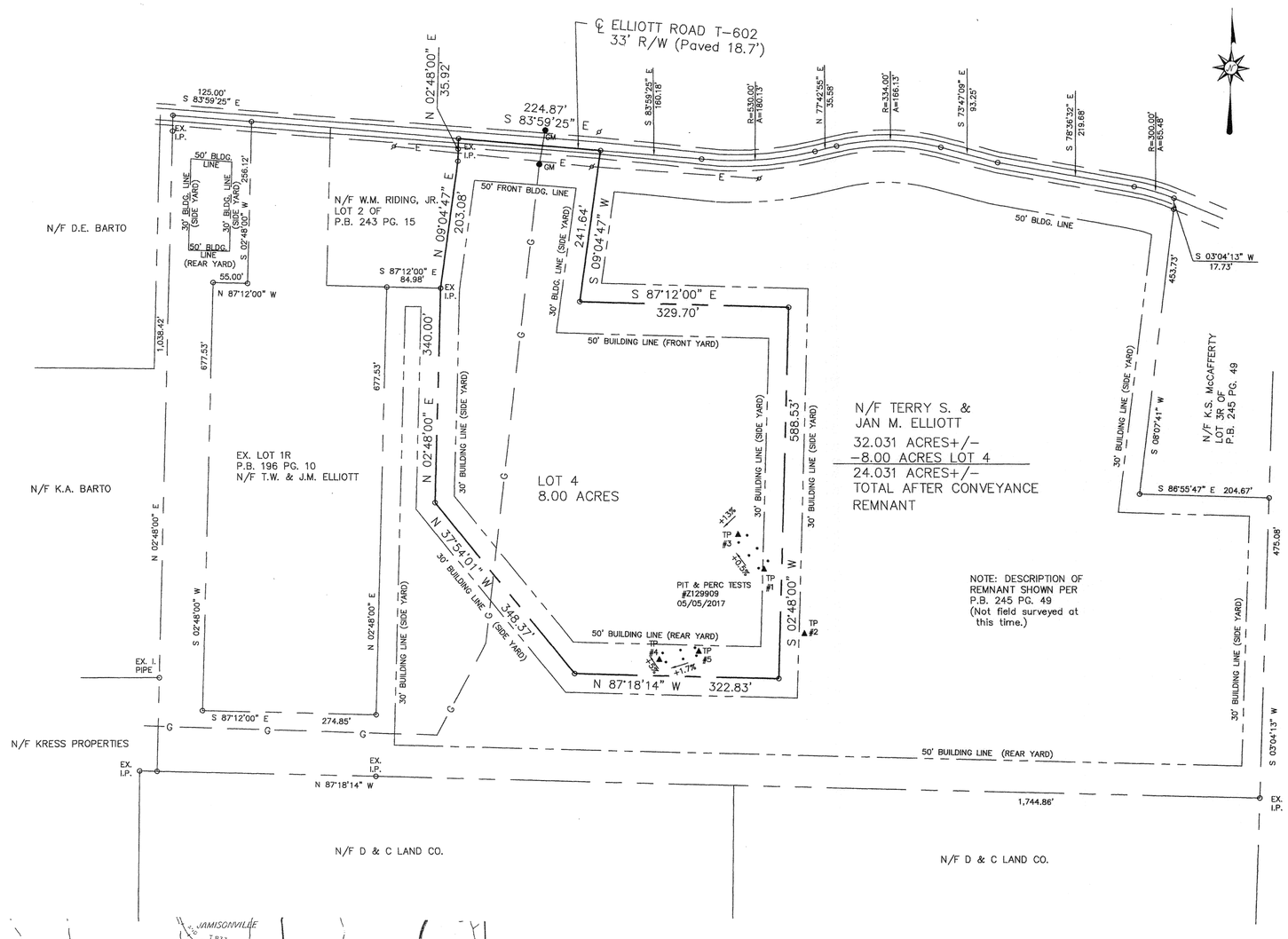

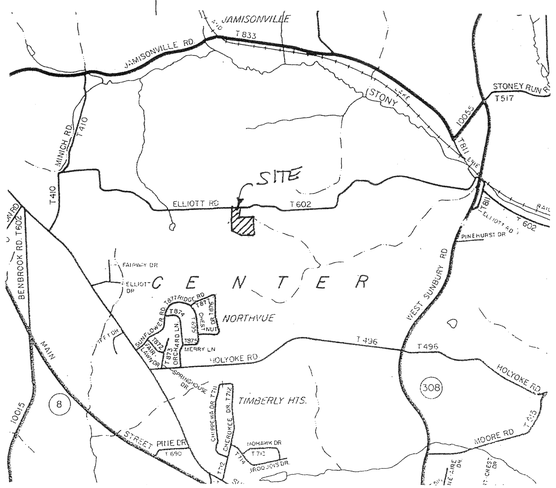
JAMISONVILLE
JAMISONVILLE RD
T 833
STONEY RUN DR
T 517
(STONY)
CREEK
RUN
RD
T 410
SITE
ELLIOTT RD
T 602
RAILROAD
PINEHURST DR
FAIRWAY DR
ELLIOTT DR
C E N T E R
NORTHVUE
T 1384
T 1379
T 1378
T 1377
T 1376
T 1375
T 1374
T 1373
T 1372
T 1371
T 1370
T 1369
T 1368
T 1367
T 1366
T 1365
T 1364
T 1363
T 1362
T 1361
T 1360
T 1359
T 1358
T 1357
T 1356
T 1355
T 1354
T 1353
T 1352
T 1351
T 1350
T 1349
T 1348
T 1347
T 1346
T 1345
T 1344
T 1343
T 1342
T 1341
T 1340
T 1339
T 1338
T 1337
T 1336
T 1335
T 1334
T 1333
T 1332
T 1331
T 1330
T 1329
T 1328
T 1327
T 1326
T 1325
T 1324
T 1323
T 1322
T 1321
T 1320
T 1319
T 1318
T 1317
T 1316
T 1315
T 1314
T 1313
T 1312
T 1311
T 1310
T 1309
T 1308
T 1307
T 1306
T 1305
T 1304
T 1303
T 1302
T 1301
T 1300
T 1299
T 1298
T 1297
T 1296
T 1295
T 1294
T 1293
T 1292
T 1291
T 1290
T 1289
T 1288
T 1287
T 1286
T 1285
T 1284
T 1283
T 1282
T 1281
T 1280
T 1279
T 1278
T 1277
T 1276
T 1275
T 1274
T 1273
T 1272
T 1271
T 1270
T 1269
T 1268
T 1267
T 1266
T 1265
T 1264
T 1263
T 1262
T 1261
T 1260
T 1259
T 1258
T 1257
T 1256
T 1255
T 1254
T 1253
T 1252
T 1251
T 1250
T 1249
T 1248
T 1247
T 1246
T 1245
T 1244
T 1243
T 1242
T 1241
T 1240
T 1239
T 1238
T 1237
T 1236
T 1235
T 1234
T 1233
T 1232
T 1231
T 1230
T 1229
T 1228
T 1227
T 1226
T 1225
T 1224
T 1223
T 1222
T 1221
T 1220
T 1219
T 1218
T 1217
T 1216
T 1215
T 1214
T 1213
T 1212
T 1211
T 1210
T 1209
T 1208
T 1207
T 1206
T 1205
T 1204
T 1203
T 1202
T 1201
T 1200
T 1199
T 1198
T 1197
T 1196
T 1195
T 1194
T 1193
T 1192
T 1191
T 1190
T 1189
T 1188
T 1187
T 1186
T 1185
T 1184
T 1183
T 1182
T 1181
T 1180
T 1179
T 1178
T 1177
T 1176
T 1175
T 1174
T 1173
T 1172
T 1171
T 1170
T 1169
T 1168
T 1167
T 1166
T 1165
T 1164
T 1163
T 1162
T 1161
T 1160
T 1159
T 1158
T 1157
T 1156
T 1155
T 1154
T 1153
T 1152
T 1151
T 1150
T 1149
T 1148
T 1147
T 1146
T 1145
T 1144
T 1143
T 1142
T 1141
T 1140
T 1139
T 1138
T 1137
T 1136
T 1135
T 1134
T 1133
T 1132
T 1131
T 1130
T 1129
T 1128
T 1127
T 1126
T 1125
T 1124
T 1123
T 1122
T 1121
T 1120
T 1119
T 1118
T 1117
T 1116
T 1115
T 1114
T 1113
T 1112
T 1111
T 1110
T 1109
T 1108
T 1107
T 1106
T 1105
T 1104
T 1103
T 1102
T 1101
T 1100
T 1099
T 1098
T 1097
T 1096
T 1095
T 1094
T 1093
T 1092
T 1091
T 1090
T 1089
T 1088
T 1087
T 1086
T 1085
T 1084
T 1083
T 1082
T 1081
T 1080
T 1079
T 1078
T 1077
T 1076
T 1075
T 1074
T 1073
T 1072
T 1071
T 1070
T 1069
T 1068
T 1067
T 1066
T 1065
T 1064
T 1063
T 1062
T 1061
T 1060
T 1059
T 1058
T 1057
T 1056
T 1055
T 1054
T 1053
T 1052
T 1051
T 1050
T 1049
T 1048
T 1047
T 1046
T 1045
T 1044
T 1043
T 1042
T 1041
T 1040
T 1039
T 1038
T 1037
T 1036
T 1035
T 1034
T 1033
T 1032
T 1031
T 1030
T 1029
T 1028
T 1027
T 1026
T 1025
T 1024
T 1023
T 1022
T 1021
T 1020
T 1019
T 1018
T 1017
T 1016
T 1015
T 1014
T 1013
T 1012
T 1011
T 1010
T 1009
T 1008
T 1007
T 1006
T 1005
T 1004
T 1003
T 1002
T 1001
T 1000
T 999
T 998
T 997
T 996
T 995
T 994
T 993
T 992
T 991
T 990
T 989
T 988
T 987
T 986
T 985
T 984
T 983
T 982
T 981
T 980
T 979
T 978
T 977
T 976
T 975
T 974
T 973
T 972
T 971
T 970
T 969
T 968
T 967
T 966
T 965
T 964
T 963
T 962
T 961
T 960
T 959
T 958
T 957
T 956
T 955
T 954
T 953
T 952
T 951
T 950
T 949
T 948
T 947
T 946
T 945
T 944
T 943
T 942
T 941
T 940
T 939
T 938
T 937
T 936
T 935
T 934
T 933
T 932
T 931
T 930
T 929
T 928
T 927
T 926
T 925
T 924
T 923
T 922
T 921
T 920
T 919
T 918
T 917
T 916
T 915
T 914
T 913
T 912
T 911
T 910
T 909
T 908
T 907
T 906
T 905
T 904
T 903
T 902
T 901
T 900
T 899
T 898
T 897
T 896
T 895
T 894
T 893
T 892
T 891
T 890
T 889
T 888
T 887
T 886
T 885
T 884
T 883
T 882
T 881
T 880
T 879
T 878
T 877
T 876
T 875
T 874
T 873
T 872
T 871
T 870
T 869
T 868
T 867
T 866
T 865
T 864
T 863
T 862
T 861
T 860
T 859
T 858
T 857
T 856
T 855
T 854
T 853
T 852
T 851
T 850
T 849
T 848
T 847
T 846
T 845
T 844
T 843
T 842
T 841
T 840
T 839
T 838
T 837
T 836
T 835
T 834
T 833
T 832
T 831
T 830
T 829
T 828
T 827
T 826
T 825
T 824
T 823
T 822
T 821
T 820
T 819
T 818
T 817
T 816
T 815
T 814
T 813
T 812
T 811
T 810
T 809
T 808
T 807
T 806
T 805
T 804
T 803
T 802
T 801
T 800
T 799
T 798
T 797
T 796
T 795
T 794
T 793
T 792
T 791
T 790
T 789
T 788
T 787
T 786
T 785
T 784
T 783
T 782
T 781
T 780
T 779
T 778
T 777
T 776
T 775
T 774
T 773
T 772
T 771
T 770
T 769
T 768
T 767
T 766
T 765
T 764
T 763
T 762
T 761
T 760
T 759
T 758
T 757
T 756
T 755
T 754
T 753
T 752
T 751
T 750
T 749
T 748
T 747
T 746
T 745
T 744
T 743
T 742
T 741
T 740
T 739
T 738
T 737
T 736
T 735
T 734
T 733
T 732
T 731
T 730
T 729
T 728
T 727
T 726
T 725
T 724
T 723
T 722
T 721
T 720
T 719
T 718
T 717
T 716
T 715
T 714
T 713
T 712
T 711
T 710
T 709
T 708
T 707
T 706
T 705
T 704
T 703
T 702
T 701
T 700
T 699
T 698
T 697
T 696
T 695
T 694
T 693
T 692
T 691
T 690
T 689
T 688
T 687
T 686
T 685
T 684
T 683
T 682
T 681
T 680
T 679
T 678
T 677
T 676
T 675
T 674
T 673
T 672
T 671
T 670
T 669
T 668
T 667
T 666
T 665
T 664
T 663
T 662
T 661
T 660
T 659
T 658
T 657
T 656
T 655
T 654
T 653
T 652
T 651
T 650
T 649
T 648
T 647
T 646
T 645
T 644
T 643
T 642
T 641
T 640
T 639
T 638
T 637
T 636
T 635
T 634
T 633
T 632
T 631
T 630
T 629
T 628
T 627
T 626
T 625
T 624
T 623
T 622
T 621
T 620
T 619
T 618
T 617
T 616
T 615
T 614
T 613
T 612
T 611
T 610
T 609
T 608
T 607
T 606
T 605
T 604
T 603
T 602
T 601
T 600
T 599
T 598
T 597
T 596
T 595
T 594
T 593
T 592
T 591
T 590
T 589
T 588
T 587
T 586
T 585
T 584
T 583
T 582
T 581
T 580
T 579
T 578
T 577
T 576
T 575
T 574
T 573
T 572
T 571
T 570
T 569
T 568
T 567
T 566
T 565
T 564
T 563
T 562
T 561
T 560
T 559
T 558
T 557
T 556
T 555
T 554
T 553
T 552
T 551
T 550
T 549
T 548
T 547
T 546
T 545
T 544
T 543
T 542
T 541
T 540
T 539
T 538
T 537
T 536
T 535
T 534
T 533
T 532
T 531
T 530
T 529
T 528
T 527
T 526
T 525
T 524
T 523
T 522
T 521
T 520
T 519
T 518
T 517
T 516
T 515
T 514
T 513
T 512
T 511
T 510
T 509
T 508
T 507
T 506
T 505
T 504
T 503
T 502
T 501
T 500
T 499
T 498
T 497
T 496
T 495
T 494
T 493
T 492
T 491
T 490
T 489
T 488
T 487
T 486
T 485
T 484
T 483
T 482
T 481
T 480
T 479
T 478
T 477
T 476
T 475
T 474
T 473
T 472
T 471
T 470
T 469
T 468
T 467
T 466
T 465
T 464
T 463
T 462
T 461
T 460
T 459
T 458
T 457
T 456
T 455
T 454
T 453
T 452
T 451
T 450
T 449
T 448
T 447
T 446
T 445
T 444
T 443
T 442
T 441
T 440
T 439
T 438
T 437
T 436
T 435
T 434
T 433
T 432
T 431
T 430
T 429
T 428
T 427
T 426
T 425
T 424
T 423
T 422
T 421
T 420
T 419
T 418
T 417
T 416
T 415
T 414
T 413
T 412
T 411
T 410
T 409
T 408
T 407
T 406
T 405
T 404
T 403
T 402
T 401
T 400
T 399
T 398
T 397
T 396
T 395
T 394
T 393
T 392
T 391
T 390
T 389
T 388
T 387
T 386
T 385
T 384
T 383
T 382
T 381
T 380
T 379
T 378
T 377
T 376
T 375
T 374
T 373
T 372
T 371
T 370
T 369
T 368
T 367
T 366
T 365
T 364
T 363
T 362
T 361
T 360
T 359
T 358
T 357
T 356
T 355
T 354
T 353
T 352
T 351
T 350
T 349
T 348
T 347
T 346
T 345
T 344
T 343
T 342
T 341
T 340
T 339
T 338
T 337
T 336
T 335
T 334
T 333
T 332
T 331
T 330
T 329
T 328
T 327
T 326
T 325
T 324
T 323
T 322
T 321
T 320
T 319
T 318
T 317
T 316
T 315
T 314
T 313
T 312
T 311
T 310
T 309
T 308
T 307
T 306
T 305
T 304
T 303
T 302
T 301
T 300
T 299
T 298
T 297
T 296
T 295
T 294
T 293
T 292
T 291
T 290
T 289
T 288
T 287
T 286
T 285
T 284
T 283
T 282
T 281
T 280
T 279
T 278
T 277
T 276
T 275
T 274
T 273
T 272
T 271
T 270
T 269
T 268
T 267
T 266
T 265
T 264
T 263
T 262
T 261
T 260
T 259
T 258
T 257
T 256
T 255
T 254
T 253
T 252
T 251
T 250
T 249
T 248
T 247
T 246
T 245
T 244
T 243
T 242
T 241
T 240
T 239
T 238
T 237
T 236
T 235
T 234
T 233
T 232
T 231
T 230
T 229
T 228
T 227
T 226
T 225
T 224
T 223
T 222
T 221
T 220
T 219
T 218
T 217
T 216
T 215
T 214
T 213
T 212
T 211
T 210
T 209
T 208
T 207
T 206
T 205
T 204
T 203
T 202
T 201
T 200
T 199
T 198
T 197
T 196
T 195
T 194
T 193
T 192
T 191
T 190
T 189
T 188
T 187
T 186
T 185
T 184
T 183
T 182
T 181
T 180
T 179
T 178
T 177
T 176
T 175
T 174
T 173
T 172
T 171
T 170
T 169
T 168
T 167
T 166
T 165
T 164
T 163
T 162
T 161
T 160
T 159
T 158
T 157
T 156
T 155
T 154
T 153
T 152
T 151
T 150
T 149
T 148
T 147
T 146
T 145
T 144
T 143
T 142
T 141
T 140
T 139
T 138
T 137
T 136
T 135
T 134
T 133
T 132
T 131
T 130
T 129
T 128
T 127
T 126
T 125
T 124
T 123
T 122
T 121
T 120
T 119
T 118
T 117
T 116
T 115
T 114
T 113
T 112
T 111
T 110
T 109
T 108
T 107
T 106
T 105
T 104
T 103
T 102
T 101
T 100
T 99
T 98
T 97
T 96
T 95
T 94
T 93
T 92
T 91
T 90
T 89
T 88
T 87
T 86
T 85
T 84
T 83
T 82
T 81
T 80
T 79
T 78
T 77
T 76
T 75
T 74
T 73
T 72
T 71
T 70
T 69
T 68
T 67
T 66
T 65
T 64
T 63
T 62
T 61
T 60
T 59
T 58
T 57
T 56
T 55
T 54
T 53
T 52
T 51
T 50
T 49
T 48
T 47
T 46
T 45
T 44
T 43
T 42
T 41
T 40
T 39
T 38
T 37
T 36
T 35
T 34
T 33
T 32
T 31
T 30
T 29
T 28
T 27
T 26
T 25
T 24
T 23
T 22
T 21
T 20
T 19
T 18
T 17
T 16
T 15
T 14
T 13
T 12
T 11
T 10
T 9
T 8
T 7
T 6
T 5
T 4
T 3
T 2
T 1
BENBROOK RD
T 1605
MAIN
8
1005
STREET PRIE DR
T 690
TIMBERLY HTS.
HOLLYOKE RD
T 1496
T 1495
WEST SUNBURY RD
HOLYOKE RD
T 1495
308
MOORE RD
T 745
T 1457
T 1458
T 1459
T 1460
T 1461
T 1462
T 1463
T 1464
T 1465
T 1466
T 1467
T 1468
T 1469
T 1470
T 1471
T 1472
T 1473
T 1474
T 1475
T 1476
T

KNOW ALL MEN BY THESE PRESENTS That Maria A. Ray of the Township of Fairview, County of Butler and Commonwealth of Pennsylvania, for myself, my heirs, executors, administrators and assigns, do hereby adopt this as my plan of lots of my property, situate in the Township of Fairview, County of Butler and Commonwealth of Pennsylvania, and for divers advantages accruing to me, do hereby dedicate forever, for public use for highway purposes, all slope areas, drives, roads, streets, lanes and ways, and other public highways shown upon the plan, with the same force and effect as if the same had been opened through legal proceedings, and in the consideration of the approval of said plan, and any future acceptance of said public highways by the Commonwealth of Pennsylvania, County of Butler and Township of Fairview, I hereby covenant and agree to and by these presents do release and forever discharge the Commonwealth of Pennsylvania, County of Butler and Township of Fairview, their successors and assigns from any liability for damages arising and to arise from any appropriation of said ground for public highways and the physical grading thereof to any grades that may be established hereafter at any time. This dedication and release shall be binding upon the above named property owner, her heirs, executors, administrators and assigns and purchasers of lots in this plan.

IN WITNESS WHEREOF, I hereunto set my hand and seal this 11 day of SEPTEMBER 2018.

Maria A. Ray

COMMONWEALTH OF PENNSYLVANIA : SS
COUNTY OF BUTLER :

Before me, the subscriber, a Notary Public in and for said Commonwealth and County, personally came Maria A. Ray and acknowledged the foregoing release and dedication and plan to be her act and deed and desired the same to be recorded as such.

WITNESS MY HAND AND NOTARIAL SEAL this 11 day of SEPT 2018.

Debra L. Jeffcoat
Notary Public

Seal & Stamp

COMMONWEALTH OF PENNSYLVANIA
Notarial Seal
Debra L. Jeffcoat, Notary Public
Jefferson Township, Butler County
My Commission Expires February 17, 2019

I, Stanley D. Graff, a Registered Professional Surveyor of the Commonwealth of Pennsylvania, do hereby certify, to the best of my knowledge, that this plan as shown hereon is based upon actual field survey of the land described and that all angles, distances and courses are correctly shown, that the monuments and markers have been set as shown on the plan, and that this plan correctly represents the lots, lands, streets and highways as surveyed and plotted by me for the owners or agents.

30 Aug. 18
Date

Seal

P. L. S. # 38181-E

COMMONWEALTH OF PENNSYLVANIA
PROFESSIONAL
STANLEY D. GRAFF
LAND SURVEYOR
NO. 38181-E

The Board of Supervisors of the Township of Fairview, hereby gives public notice that in approving this plan for recording purposes only, the Township of Fairview assumes no obligations, legal or otherwise, expressed or implied either to accept said streets as Township streets or roads or grade, pave and curb the streets in said plan, or to construct sewers therein or to install any other such service ordinarily installed in Township streets or roads.

REVIEWED DRM

Approved by the Supervisors of the Township of Fairview this 10th day of September 2018.

Secretary

BOARD OF SUPERVISORS FAIRVIEW TOWNSHIP BUTLER CO. PA

Chairman

Approved by the Butler County Planning Commission this 31ST day of AUG. 2018.

Secretary

Seal

Chairman

BUTLER COUNTY PLANNING COMMISSION

See Comments On File at the Butler County Planning Commission

Plan Number: 18180

COMMONWEALTH OF PENNSYLVANIA : SS
COUNTY OF BUTLER :

Recorded in the Recorder's Office for the recording of deeds, plans, etc., in said County in Plan Book Volume 373 Page 14.

Given under my hand and seal this 11 day of September 2018.

Recorder

Seal

MICHELE M. MUSTELLO
RECORDER OF DEEDS
My Commission Expires First Monday in January 2020

RECORDER OF DEEDS BUTLER COUNTY, PA

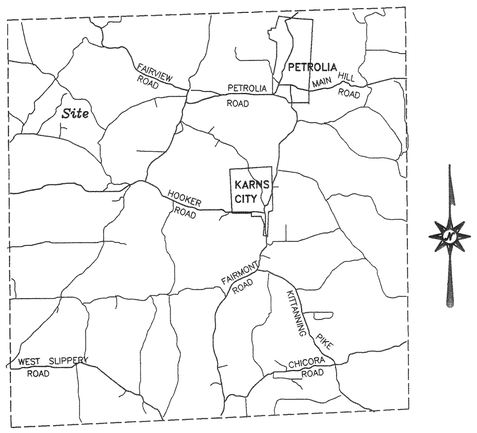

Vicinity Map

N/F J. T. Orourke
150-1F57-1A

N/F J. J. Bopp
150-1F112-5

N/F J. Orourke
150-1F57-3D

N/F K. Rottman
150-1F12-3A

N/F R. W. Stichler
150-1F112-7

T-636

33' R/W

S 22°28'00"E 148.96'

S 21°36'00"E 297.95'

S 31°01'00"E 150.73'

S 53°01'00"E 108.28'

S 68°09'00"E 163.27'

S 84°26'00"E 138.83'

S 89°40'00"E 218.88'

S 90°00'00"W 422.14'

N 89°51'00"W 1176.24'

N 00°54'00"E 281.42'

N 02°10'00"W 175.00'

N 20°15'00"W 240.00'

S 89°40'00"E 218.88'

S 84°28'00"E 138.83'

S 68°09'00"E 163.27'

S 53°01'00"E 108.28'

S 31°01'00"E 150.73'

S 21°36'00"E 297.95'

S 22°28'00"E 148.96'

garage existing nonconforming set back

40' bldg.line from R/W

Residual

original 150-1F57-1 15.809 Acres
less lot 1 3.636 Acres
12.174 Acres

dwl. public water

approximate septic field

pond
0.85 Acre

Aspen Road

15' side yard

N 89°51'00"W 1176.24'

N 02°10'00"W 175.00'

S 02°10'00"E 175.00'

N 20°15'00"W 240.00'

S 20°15'00"E 240.00'

20' side yard

8"PVC spring

approximate septic field

dwl.

50' bldg.line from R/W

S 87°13'40"E 296.29'

S 84°28'00"E 138.83'

S 68°09'00"E 163.27'

S 53°01'00"E 108.28'

S 31°01'00"E 150.73'

S 21°36'00"E 297.95'

S 22°28'00"E 148.96'

N 89°51'00"W 1176.24'

15' side yard

N 90°00'00"W 422.14'

S 90°00'00"E 422.14'

50' rear yard

40' rear yard

281.42'

414.60'

20' side yard

N 00°54'00"E 696.02'

Tree

1
3.636 Acres

COURSE	BEARING	DISTANCE
L-1	S 87°13'40"E	296.29'
L-2	S 89°40'00"E	30.00'
L-3	S 20°15'00"E	240.00'
L-4	S 02°10'00"E	175.00'
L-5	N 90°00'00"W	422.14'
L-6	N 00°54'00"E	414.60'

COURSE	BEARING	DISTANCE
L-1	N 89°51'00"W	1176.24'
L-2	N 00°54'00"E	281.42'
L-3	S 90°00'00"E	422.14'
L-4	N 02°10'00"W	175.00'
L-5	N 20°15'00"W	240.00'
L-6	S 89°40'00"E	218.88'
L-7	S 84°26'00"E	138.83'
L-8	S 68°09'00"E	163.27'
L-9	S 53°01'00"E	108.28'
L-10	S 31°01'00"E	150.73'
L-11	S 21°36'00"E	297.95'
L-12	S 22°28'00"E	148.96'

N E S W

80 0 80 160 240
GRAPHIC SCALE – FEET

NOTE: Subject to and together with any and all existing rights-of-way, easements and conditional clauses of record or established by due process.

Reference:

'75 Charles L. Fair, II survey for John Benesh

M.A.Ray Plan

Owner:
Maria A. Ray
342 Aspen Rd.
Petrolla, PA 16050

GRAFF SURVEYING LLC
P.O. Box 511
Somerset, PA 16056
330 Fisher Road, Cabot, PA 16023
info@graffsurveying.com
724.352.3811 fax 724.352.1059

SUBDIVISION SURVEY for Maria A. Ray
PROJECT No: 18186
SITUATE: FAIRVIEW TOWNSHIP, BUTLER COUNTY, PA
DATE: 8/30/18 REV:
DWN.By: Sdg CHK.By:
Co. TAX No: 150-1F57-1

Instr: 201809110018804 09/11/2018
Pages: 1 | SBPG
Michele Mustello | T20180013331
Butler County Recorder FL

RECORDED 20	
PLAN BOOK	PAGE
373	14
SHEET of	

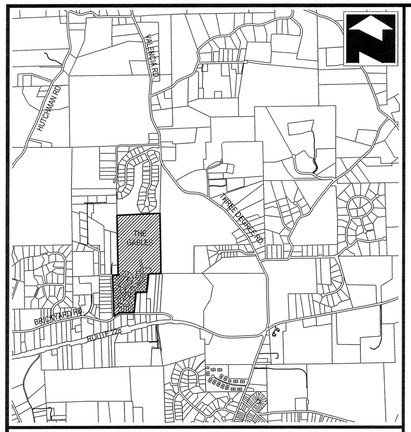

LOCATION MAP 1" = 2000'

SURVEYOR

ADAMS TOWNSHIP ENGINEER

BUTLER COUNTY PLANNING COMMISSION

BUTLER COUNTY RECORDER OF DEEDS

APPROVED BY THE ADAMS TOWNSHIP BOARD OF SUPERVISORS THIS 10th DAY OF September 20 18

THE BOARD OF SUPERVISORS OF THE TOWNSHIP OF ADAMS HEREBY GIVES PUBLIC NOTICE THAT IN APPROVING THIS PLAN FOR RECORDING PURPOSES ONLY, THE TOWNSHIP OF ADAMS ASSUMES NO OBLIGATIONS, LEGAL OR OTHERWISE, EXPRESSED OR IMPLIED EITHER TO ACCEPT SAID STREETS AS TOWNSHIP STREETS OR ROADS OR GRADE, PAVE AND CURB THE STREETS IN SAID PLAN, OR TO CONSTRUCT SEWERS THEREIN OR TO INSTALL ANY OTHER SUCH SERVICE ORDINARILY INSTALLED IN TOWNSHIP STREETS OR ROADS.

SECRETARY, ADAMS TOWNSHIP SUPERVISORS — ADAMS TOWNSHIP SUPERVISOR — ADAMS TOWNSHIP SUPERVISOR

CHAIRPERSON, ADAMS TOWNSHIP SUPERVISORS — ADAMS TOWNSHIP SUPERVISOR

I, JAMES A SPERDUTE, PLS PROFESSIONAL LAND SURVEYOR OF THE COMMONWEALTH OF PENNSYLVANIA, DO HEREBY CERTIFY, TO THE BEST OF MY KNOWLEDGE,INFORMATION AND BELIEF, THAT THIS PLAN CORRECTLY REPRESENTS THE LOTS, LANDS, STREETS, AND HIGHWAYS AS SURVEYED AND PLOTTED BY ME FOR THE OWNERS OR AGENTS.

JAMES A. SPERDUTE, P.L.S. # 24497-E — DATE 9/10/18

I _____ A REGISTERED PROFESSIONAL ENGINEER FOR THE TOWNSHIP OF ADAMS, DO HEREBY CERTIFY THAT THIS SUBDIVISION PLAN MEETS ALL THE ENGINEERING AND DESIGN REQUIREMENTS OF THE ADAMS TOWNSHIP SUBDIVISION AND ZONING ORDINANCES

Ronald Olsen 26402E — PRINTED NAME & REGISTRATION NO. — DATE 9/10/18

REVIEWED BY THE BUTLER COUNTY PLANNING COMMISSION THIS 10TH DAY OF SEPT A.D. 20 18

SECRETARY, BUTLER COUNTY PLANNING COMMISSION — CHAIRPERSON, BUTLER COUNTY PLANNING COMMISSION

COMMONWEALTH OF PENNSYLVANIA]
SS
COUNTY OF BUTLER]

RECORDED IN THE RECORDER OFFICE FOR THE RECORDING OF DEEDS, PLANS, ETC. IN BUTLER COUNTY IN PLAN BOOK VOLUME 373 PAGE 15

GIVEN UNDER MY HAND AND SEAL THIS 11th DAY OF September A.D., 20 18

BUTLER COUNTY RECORDER OF DEEDS

MICHELE M. MUSTELLO
RECORDER OF DEEDS
My Commission Expires First Monday in January 2020

KNOW ALL MEN BY THESE PRESENTS THAT BRENNAN BUILDERS INC., VIRTUE OF A RESOLUTION OF ITS BOARD OF DIRECTORS DOES HEREBY ADOPT THIS AS ITS PLAN OF SUBDIVISION OF ITS PROPERTY SITUATE IN THE TOWNSHIP OF ADAMS, COUNTY OF BUTLER, COMMONWEALTH OF PENNSYLVANIA, AND FOR DIVERS ADVANTAGES ACCRUING TO IT, DOES HEREBY DEDICATE FOREVER, FOR PUBLIC USE FOR HIGHWAY, DRAINAGE, SEWAGE AND UTILITY PURPOSES, ALL DRIVES, ROADS, STREETS, LANDS, RIGHTS-OF-WAY, EASEMENTS, WAYS AND OTHER PUBLIC HIGHWAYS SHOWN UPON THE PLAN, WITH THE SAME FORCE AND EFFECT AS IF THE SAME HAD BEEN OPENED THROUGH LEGAL PROCEEDINGS, AND IN CONSIDERATION OF THE APPROVAL OF SAID PLAN AND ANY FUTURE ACCEPTANCE OF SAID PUBLIC HIGHWAYS, RIGHTS-OF-WAY AND EASEMENTS BY THE TOWNSHIP OF ADAMS, BRENNAN BUILDERS, INC, HEREBY COVENANTS AND AGREES TO AND BY THESE PRESENTS DOES RELEASE AND FOREVER DISCHARGE THE TOWNSHIP OF ADAMS, ITS SUCCESSORS OR ASSIGNS FROM ANY LIABILITY FOR DAMAGES ARISING AND TO ARISE FROM THE APPROPRIATION OF SAID GROUND FOR PUBLIC HIGHWAYS AND OTHER PUBLIC USES AND THE PHYSICAL GRADING THEREOF TO ANY GRADES THAT MAY BE ESTABLISHED.

THIS DEDICATION AND RELEASE SHALL BE BINDING UPON BRENNAN BUILDERS INC., ITS SUCCESSORS AND ASSIGNS AND PURCHASERS OF LOTS IN THIS PLAN.

IN WITNESS WHEREOF, THE SAID CORPORATION HAS CAUSED ITS CORPORATE SEAL TO BE AFFIXED BY THE HAND OF ITS PRESIDENT AND THE SAME TO BE ATTESTED BY ITS SECRETARY, THIS 10 DAY OF SEPT A.D. 20 18

ATTEST:

OFFICER WITNESSING — ROBERT BRENNAN, PRESIDENT, BRENNAN BUILDERS, INC.

THE FOREGOING ADOPTION AND DEDICATION IS MADE BY BRENNAN BUILDERS INC. WITH FULL UNDERSTANDING AND AGREEMENT THAT THE APPROVAL OF THE TOWNSHIP BOARD OF SUPERVISORS, IF ATTACHED HERETO, WILL BECOME NULL AND VOID UNLESS THIS PLAN IS RECORDED IN THE RECORDER OF DEEDS OFFICE OF BUTLER COUNTY WITHIN NINETY (90) DAYS FROM THE DATE OF SAID APPROVAL.

ROBERT BRENNAN, PRESIDENT, BRENNAN BUILDERS INC.

COMMONWEALTH OF PENNSYLVANIA]
SS
COUNTY OF BUTLER]

ON THIS 10 DAY OF SEPT A.D., 20 18, BEFORE ME, A NOTARY PUBLIC IN AND FOR SAID COUNTY AND COMMONWEALTH, PERSONALLY APPEARED ROBERT BRENNAN OF BRENNAN BUILDERS, INC. WHO BEING DULY SWORN, DEPOSES AND SAYS THAT HE/SHE WAS PERSONALLY PRESENT AT THE EXECUTION OF THE ADOPTION, RELEASE AND DEDICATION AND SAW THE COMMON AND CORPORATE SEAL OF THE SAID CORPORATION DULY SIGN AND SEALED BY AND AS FOR THE ACT AND DEED OF SAID, BRENNAN BUILDERS INC. FOR THE USES AND PURPOSES THEREIN MENTIONED, AND THAT THE NAME OF THIS DEPONENT SUBSCRIBED TO THE SAID RELEASE AND DEDICATION AS PRESIDENT OF BRENNAN BUILDERS, INC. IN ATTESTATION OF THE DUE EXECUTION AND DELIVERY OF SAID RELEASE AND DEDICATION OF THIS DEPONENTS OWN AND PROPER RESPECTIVE HANDWRITING.

COMMONWEALTH OF PENNSYLVANIA
NOTARIAL SEAL
Andrea Renee Kramer, Notary Public
Evans City Boro, Butler County
My Commission Expires April 21, 2020
MEMBER, PENNSYLVANIA ASSOCIATION OF NOTARIES

ROBERT BRENNAN, PRESIDENT, BRENNAN BUILDERS, INC.

SWORN TO AND SUBSCRIBED BEFORE ME THE DAY AND DATE ABOVE WRITTEN.

WITNESS MY HAND AND NOTARIAL SEAL THIS 10th DAY OF September A.D., 20 18

NOTARY PUBLIC

MY COMMISSION EXPIRES THE 21st DAY OF April A.D., 20 20

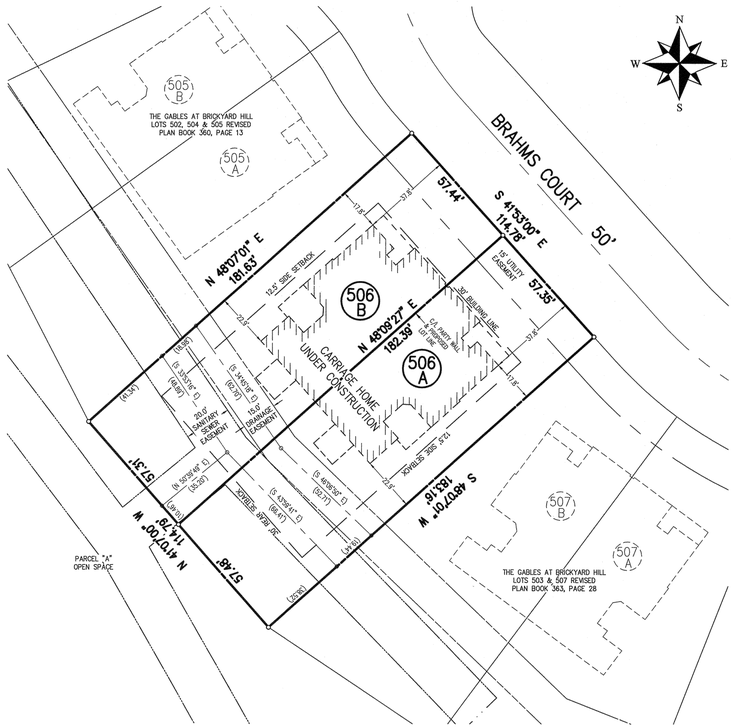

LOT AREAS:

LOT #	SQ.FT.	ACRES	ORIGINAL TAX PARCEL	DEED REFERENCE	ORIGINAL LOT TYPE
506A	10,493.188	0.241			
506B	10,442.620	0.240			
ORIGINAL LOT 506	20,935.808	0.481	010-S16-BB506	201801160000879	NEIGHBORHOOD LOT

GENERAL PLAN NOTES:

PROPERTY OWNERS:

BRENNAN BUILDERS INC.
800 SOUTH WASHINGTON STREET
EVANS CITY, PA 16033
724-865-2929

TAX PARCELS & DEED REFERENCES ARE SHOWN IN THE LOT AREA CHART

THE PURPOSE OF THIS PLAN IS TO FURTHER SUBDIVIDE THE LOTS SHOWN AT THE CENTERS OF THE BUILDING PARTY WALLS AS SHOWN.

THIS PLAN IS SUBJECT TO THE CONDITIONS OF APPROVAL OF THE GABLES AT BRICKYARD HILL MASTER PLAN AND SUBSEQUENT GABLES AT BRICKYARD HILL PHASE IV PLAN.

PROPOSED SEWER: BCRA

PROPOSED WATER: MWAAT

BRENNAN
BUILDERS, INC
800 SOUTH WASHINGTON STREET
EVANS CITY, PA 16033
724-865-2929

Instr:201809110019656 09/11/2018
Pages:1 F:$45.00 2:22PM
Michele Mustello T20180013335
Butler County Recorder FL

PLAN BOOK	PAGE
373	15

GRAPHIC SCALE

30 0 15 30 60 120

(IN FEET)
1 inch = 30 ft.

DRAWING NUMBER:	1001-1819305
DRAWING SCALE:	1"=30'
DATE:	SEPTEMBER 4, 2018
DRAWN BY:	JSS
REVISIONS:	

PLAN OF SURVEY & SUBDIVISION FOR

THE GABLES AT BRICKYARD HILL LOT 506 REVISED

BEING A REVISION TO LOT 506 OF THE
THE GABLES AT BRICKYARD HILL PHASE IV AS RECORDED AT PLAN BOOK 343, PAGE 14
ADAMS TOWNSHIP, BUTLER COUNTY, PENNSYLVANIA

SPERDUTE LAND SURVEYING
SLS
HARMONY, PA
724-452-4362
SLS1@zoomtelnet.net
SURVEYING & LAND DEVELOPMENT PLANNING

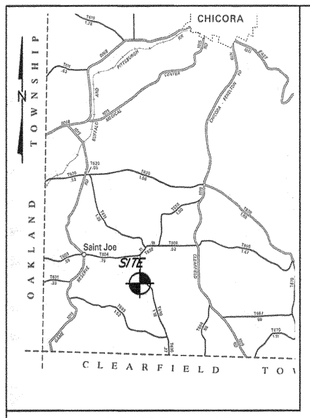

LOCATION MAP

NOTE: NO ABSTRACT OF TITLE, NOR TITLE COMMITMENT, NOR RESULTS OF A TITLE SEARCH WERE FURNISHED TO THE SURVEYOR THERE MAY EXIST OTHER DOCUMENTS OF RECORD THAT WOULD AFFECT THIS SURVEYED PARCEL.

SUBJECT TO :

EASEMENTS, SERVITUDES, RIGHTS-OF-WAY, LEASES, EXCEPTIONS, RESERVATIONS, RESTRICTIONS, ECT.,IF ANY THAT MAY APPEAR EITHER RECORDED OR UNRECORDED.

BUILDING SETBACK LINES:
FRONT 60' FROM R\W

Instr:201809130018780 09/13/2018
Pages:1 F:$45.00 9:01AM
Michele Mustello T201800134S2
Butler County Recorder RP

I, the undersigned_JOHN MURRAY_(owners) of the Real Estate shown and described, herein do hereby certify that I have laid off, platted, and subdivided, and hereby layoff, plat, and subdivide said Real Estate in accordance with the within plat.

John G Murray

Owners

COMMONWEALTH OF PENNSYVANIA
COUNTY OF BUTLER

on this 15th day of August, 2018 Before me a Notary Public in and for said state and county personally came John Murray known to be the person whose name is subscribed to the within instrument.

In witness whereof I have here unto set my name and offical seal.

Eric R Snow

Notary Public

Commonwealth of Pennsylvania - Notary Seal
Eric R. Snow, Notary Public
Butler County
My commission expires November 26, 2021
Commission number 1239925
Member, Pennsylvania Association of Notaries

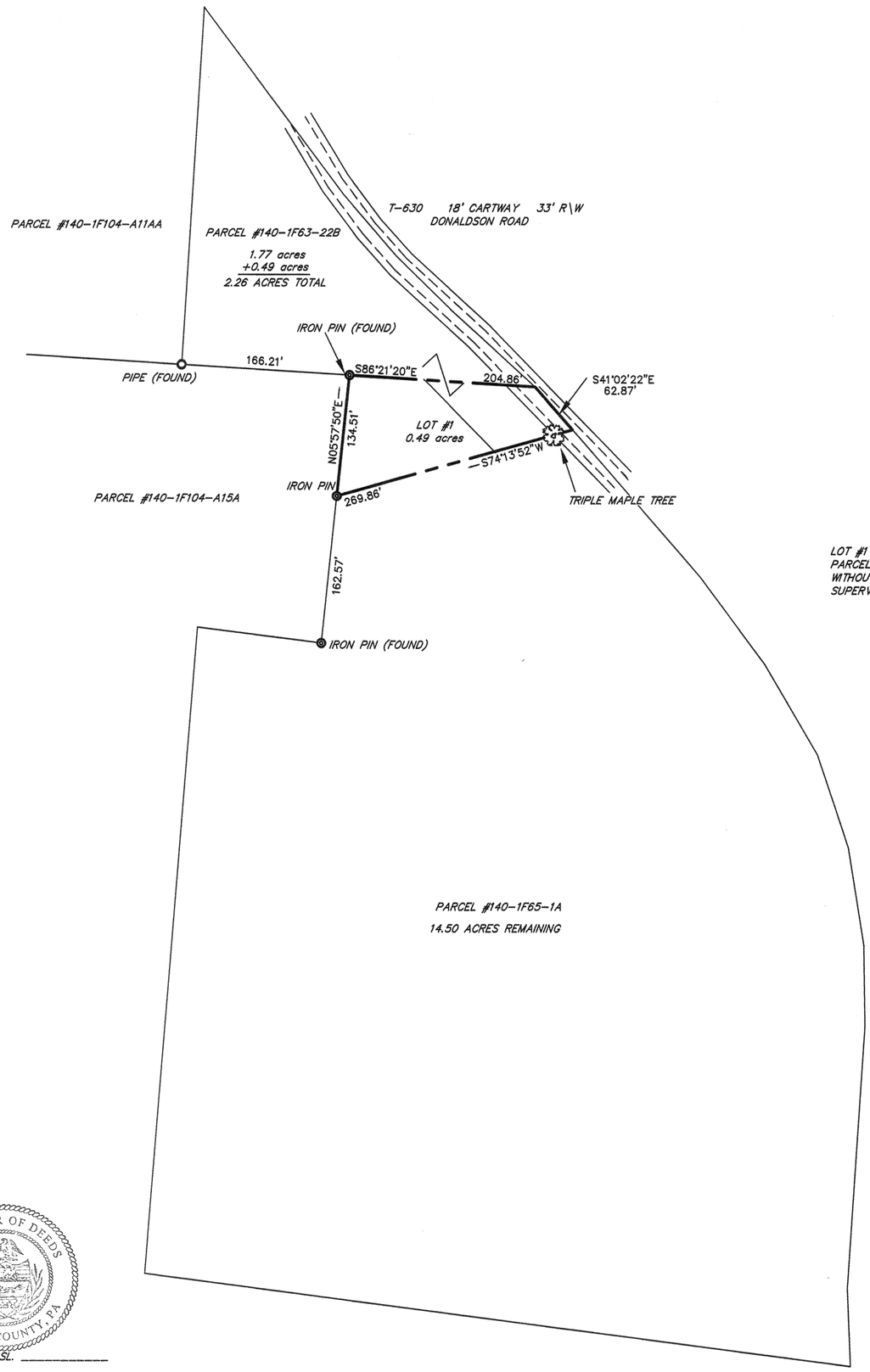

LOT #1 OF PARCEL #140-1F65-1A WILL BECOME PART OF PARCEL #140-1F63-22B, AND CAN NOT BE SOLD SEPERATLEY WITHOUT THE WRITTEN PERMISSION FROM THE DONEGAL TOWNSHIP SUPERVISIORS.

Certification by Professional Land Surveyor

I, Richard D.Sedwick, a Professional Land Surveyor, registered by the Commonwealth of Pennsylvania,do hereby certify that the plan as shown hereon is based upon actual field survey of the land described and that all angles,distances and courses are correctly shown, that the monuments and markers have been set as shown on the plan, and that this plan correctly represents the lots, land, streets and highways, as surveyed

AUG. 2018
DATE

SEAL

COMMONWEALTH OF PENNSYLVANIA REGISTERED PROFESSIONAL RICHARD D. SEDWICK
Signature and Surveyor SURVEYOR SU-050061-E

Final approval by the Donegal Twp. Planning Commission

this ____ day of ____, 20____

Secretary Chairman

Final approval by the Donegal Twp. Supervisors

this 20 day of August, 2018

Secretary Chairman

TOWNSHIP OF DONEGAL SEAL BUTLER CO. PA

Reviewed by the Butler County Planning Commission

this 13TH day of AUG, 2018

Secretary Seal Chairman

BUTLER COUNTY PLANNING COMMISSION

COMMONWEALTH OF PENNSYLVANIA COUNTY OF BUTLER
Recording Certificate

Recorded this 13th day of September, 2018 in the.

Register and Recorder of Deeds office, in Plan Book, Vol. 373, Page 16. SL. _____

Recorder of Deeds

RECORDER OF DEEDS BUTLER COUNTY, PA

MICHELE M. MUSTELLO
RECORDER OF DEEDS
My Commission Expires First Monday in January 2020

N

PLAN BOOK	PAGE
373	16

DRAWN BY: R.D.S.	LOT LINE REVISION PLAN
CHECKED BY D.R.D.	MADE FOR
SCALE: 1"=100'	JOHN MURRAY
DATE: AUG. 2018	DONEGAL TWP BUTLER CO.
DRAWING NO: 140-1F65-1A	R.D.SEDWICK P.L.S. KITTANNING, PA. 724-355-9302

SITE DEVELOPMENT PLAN

Butler Rehabilitation Center
New Parking Lot & Storage Building
1610 North Main Extension

Situated In

Center Township
Butler County, Pa

Prepared For

A&D Holding Co, LLC.
2661 Clearview Road
Allison Park, Pa 15101

Instr:201809140018943 09/14/2018
Pages:4 F:$165.00 2:41PM
Michele Mustello T20180013571
Butler County Recorder FL

SHEET INDEX

SHEET NO.	SHEET NAME
C.100	Cover Sheet - Site Development
C.101	Existing Conditions Plan
C.102	Site Development Plan
C.103	Site Landscape Plan
C.104	Site Light Plan
C.201	Erosion & Sedimentation Control Plan
C.202	Erosion & Sedimentation Control Details
C.203	Erosion & Sedimentation Control Details
C.204	Erosion & Sedimentation Control Details
C.205	Erosion & Sedimentation Control Details
C.206	SWM Plan
C.207	SWM Details & Notes

ZONING = C-1 RETAIL & SERVICE COMMERCIAL DISTRICT & CORE INFILL DISTRICT

(LOT AREA, YARD & HEIGHT REQUIREMENTS ARE PER C-1 PERMITTED & CONDITIONAL USES)

MINIMUM FRONTAGE FROM ROW	= 50 FEET
MINIMUM REAR SETBACK	= 30 FEET
MINIMUM SIDEYARD SETBACK	= 15 FEET
MAXIMUM LOT COVERAGE	= 70% (41% PROPOSED)
MINIMUM LOT AREA	NONE
MAXIMUM BUILDING HEIGHT	= 35' (25' PROPOSED)

EXISTING USE: COMMERCIAL – PROFESSIONAL OFFICE (MEDICAL REHABILITATION)
EX OFFICE PORTION = 14,335 sf
EX STORAGE PORTION = 3,020 sf
NEW STORAGE BUILDING= 2,340 sf

EXISTING PARKING: REGULAR SPACES = 27
HANDICAPPED SPACES = 13
TOTAL EXISTING SPACES = 40

REQUIRED PARKING (Per Art XX-Sec20-2001): 14,335 SF (1 Space/300 sf) = 48
& BASED ON OFFICE USE. STORAGE USE DOES NOT REQUIRE ADDITIONAL PARKING.

PROPOSED ADDITIONAL PARKING PER THIS PLAN= 22 REGULAR

PROPOSED TOTAL PARKING COUNT=: 40 Existing + 22 New = 62 Total (> 48 Req'd, OK)

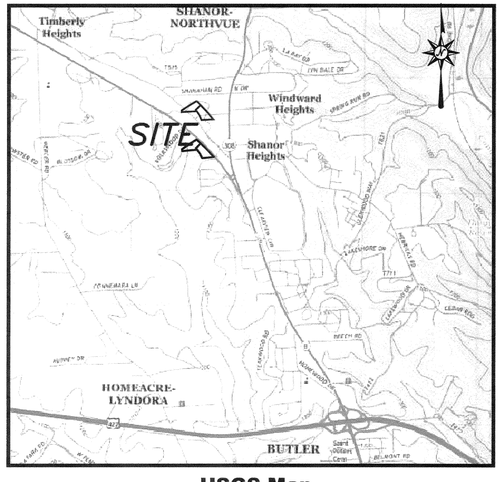

USGS Map
Mt Chestnut Quad - 2016
Scale - 1" = 2000'

CENTER TOWNSHIP

BUTLER COUNTY PLANNING COMMISSION

BUTLER COUNTY RECORDER OF DEEDS

CORPORATE ACKNOWLEDGEMENT

COMMONWEALTH OF PENNSYLVANIA }
COUNTY OF ~~BUTLER~~ Allegheny } SS:

ON THIS 23 DAY OF August, 2018 BEFORE ME, A NOTARY PUBLIC IN AND FOR SAID COUNTY AND COMMONWEALTH, PERSONALLY APPEARED DAVE AUGUSTINE, MANAGER OF A & D HOLDING, LLC WHO BEING DULY SWORN, DEPOSES AND SAYS THAT HE WAS PERSONALLY PRESENT AT THE EXECUTION OF THE ADOPTION, RELEASE AND DEDICATION AND SAW THE COMMON AND CORPORATE SEAL OF THE SAID CORPORATION DULY SIGN AND SEALED BY AND AS FOR THE ACT AND DEED OF THE SAID A & D HOLDING, LLC FOR THE USES AND PURPOSES THEREIN MENTIONED, AND THAT THE NAME OF THIS DEPONENT SUBSCRIBED TO THE SAID RELEASED AND DEDICATION AS MANAGER OF A & D HOLDING, LLC IN ATTESTATION OF THE DUE EXECUTION AND DELIVERY OF SAID RELEASE AND DEDICATION OF THIS DEPONENT'S OWN AND PROPER AND RESPECTIVE HANDWRITING.

DAVE AUGUSTINE, MANAGER (SEAL)

SWORN TO AND SUBSCRIBED BEFORE ME THE DAY AND DATE ABOVE WRITTEN.

WITNESS MY HAND AND NOTARIAL SEAL THIS 23 DAY OF August, 2018.

NOTARY PUBLIC

MY COMMISSION EXPIRES THE 8 DAY OF April, 2022

Commonwealth of Pennsylvania - Notary Seal
Matthew T. Milisch, Notary Public
Allegheny County
My commission expires April 8, 2022
Commission number 1223104
Member, Pennsylvania Association of Notaries

CERTIFICATION OF TITLE

I HEREBY CERTIFY THAT THE TITLE TO THE PROPERTY CONTAINED IN THE A & D HOLDING, LCC CONSOLIDATION PLAN IS IN THE NAME OF A & D HOLDING, LLC AND IS RECORDED AS INSTRUMENT NUMBER 20170530011075.

WITNESS

DAVE AUGUSTINE – MANAGER
A & D HOLDING, LLC

BUTLER COUNTY PENNSYLVANIA
Recorded in the Recorder's office
of the said County on this 14 day
of September, 20 18
to ~~HIGHWAY~~ PLAN BOOK
No. 201809140018943 BK 373 pg. 17-20
Witness my hand and the seal of said office.

RECORDER

MICHELE M. MUSTELLO
RECORDER OF DEEDS
My Commission Expires First Monday in January 2020

APPROVAL BY TOWNSHIP OF CENTER

THE TOWNSHIP BOARD OF SUPERVISORS OF THE TOWNSHIP OF CENTER, BUTLER COUNTY, PENNSYLVANIA, HEREBY GIVES PUBLIC NOTICE THAT IT IS APPROVING THIS PLAN OF SUBDIVISION FOR RECORDING PURPOSES ONLY. THE APPROVAL OF THIS SUBDIVISION PLAT BY THE TOWNSHIP OF CENTER DOES NOT CONSTITUTE AN ACCEPTANCE OF THE ROADS, STREETS, ALLEYS,

MAINS OR ANY OTHER SERVICES OR IMPROVEMENTS SHOWN ON THIS PLAN NOR AN ASSUMPTION OF MAINTENANCE RESPONSIBILITY, NOR WILL THE SAME BE ACCEPTED OR MAINTAINED UNTIL CONSTRUCTED IN ACCORDANCE WITH ALL TOWNSHIP SPECIFICATIONS AND REQUIREMENTS AND OFFICIALLY ACCEPTED BY ACTION OF THE TOWNSHIP BOARD OF SUPERVISORS.

THE TOWNSHIP OF CENTER, BUTLER COUNTY, PENNSYLVANIA ON THIS 8th DAY OF August, 2018.

ATTEST:

SECRETARY, BOARD OF SUPERVISORS

CHAIRMAN, BOARD OF SUPERVISORS

TOWNSHIP PLANNING COMMISSION RECOMMENDATION FOR APPROVAL

THIS PLAT OF SUBDIVISION HAS BEEN RECOMMENDED FOR APPROVAL BY THE PLANNING COMMISSION OF THE TOWNSHIP OF CENTER, BUTLER COUNTY, COMMONWEALTH OF PENNSYLVANIA ON THIS 24th DAY July, 2018

ATTEST:

SECRETARY

CHAIRMAN

BUTLER COUNTY PLANNING COMMISSION ACKNOWLEDGMENT

REVIEWED/APPROVED BY THE BUTLER COUNTY PLANNING COMMISSION THIS 24TH DAY OF July, 2018.

SECRETARY

CHAIRMAN

SEE COMMENTS ON FILE AT THE BUTLER COUNTY PLANNING COMMISSION PLAN NUMBER 17231

UTILITY INFORMATION

SANITARY SEWERS	*GAS*
BUTLER AREA SEWER AUTHORITY 100 LITMAN ROAD BUTLER, PA 16001 JAMES TOMAZICH jtomazich@basapa.org	PEOPLES NATURAL GAS 375 N SHORE DRIVE #400 PITTSBURGH PA 15212 DON ZOMBEH don.zombeh@peoples-gas.com
WATER	*COMMUNICATION*
CENTER TOWNSHIP WATER AUTHORITY 150 HENRICKS ROAD BUTLER, PA 16001 GREGORY BREWSTER centwp@aol.com	ARMSTRONG CABLE 660 S. BENBROOK ROAD BUTLER, PA 16001 ROB WOLTHERS rwolthers@ogoc.com
ELECTRIC	CENTURYLINK 122 BALTIMORE STREET PO BOX 896 HANOVER, PA 17331 LEO HILBERT leo.c.hilbert@centurylink.com
WEST PENN POWER 9045 N. RIVER ROAD INDIANAPOLIS, PA 46240 USIC LOCATING SERVICE PERSONNEL	

COMMONWEALTH OF PENNSYLVANIA
REGISTERED PROFESSIONAL
JAMES A. DAY
ENGINEER PE-045099-E

James A. Day

HAMPTON TECHNICAL ASSOCIATES
ENGINEERING LAND SURVEYORS
ESTABLISHED 1960
www.hampton-technical.com

☒ Corporate Office
Etna Technical Center
35 Wilson Street, Suite 201
Pittsburgh, PA 15223
PHONE: (412) 781-9660
FAX: (412) 781-5904

☐ Mars Office
123 Ridge Road, Suite B
Valencia, PA 16059
PHONE: (724) 625-4544
FAX: (724) 625-4549

Serial Number: 20172502451
Issued: 09-08-2017

STOP !!!
CALL BEFORE YOU DIG!
PENNSYLVANIA LAW REQUIRES 3 WORKING DAYS NOTICE FOR CONSTRUCTION PHASE AND 10 WORKING DAYS NOTICE IN DESIGN STAGE
PENNSYLVANIA ONE CALL SYSTEM, INC. 1-800-242-1776

PLAN BOOK	PAGE
373	17

NO.	SUBMISSION	DATE

DATE ISSUED: 04-26-18

PROJECT NAME: New Parking Lot & Building

PROJECT # 18-12630-1

Z:\PROJECTS\18-XXXX\..\site\18-12630..\site\18-12630-1\dwg, Cover-Site Plan, 8/20/2018 9:40 AM, James Day

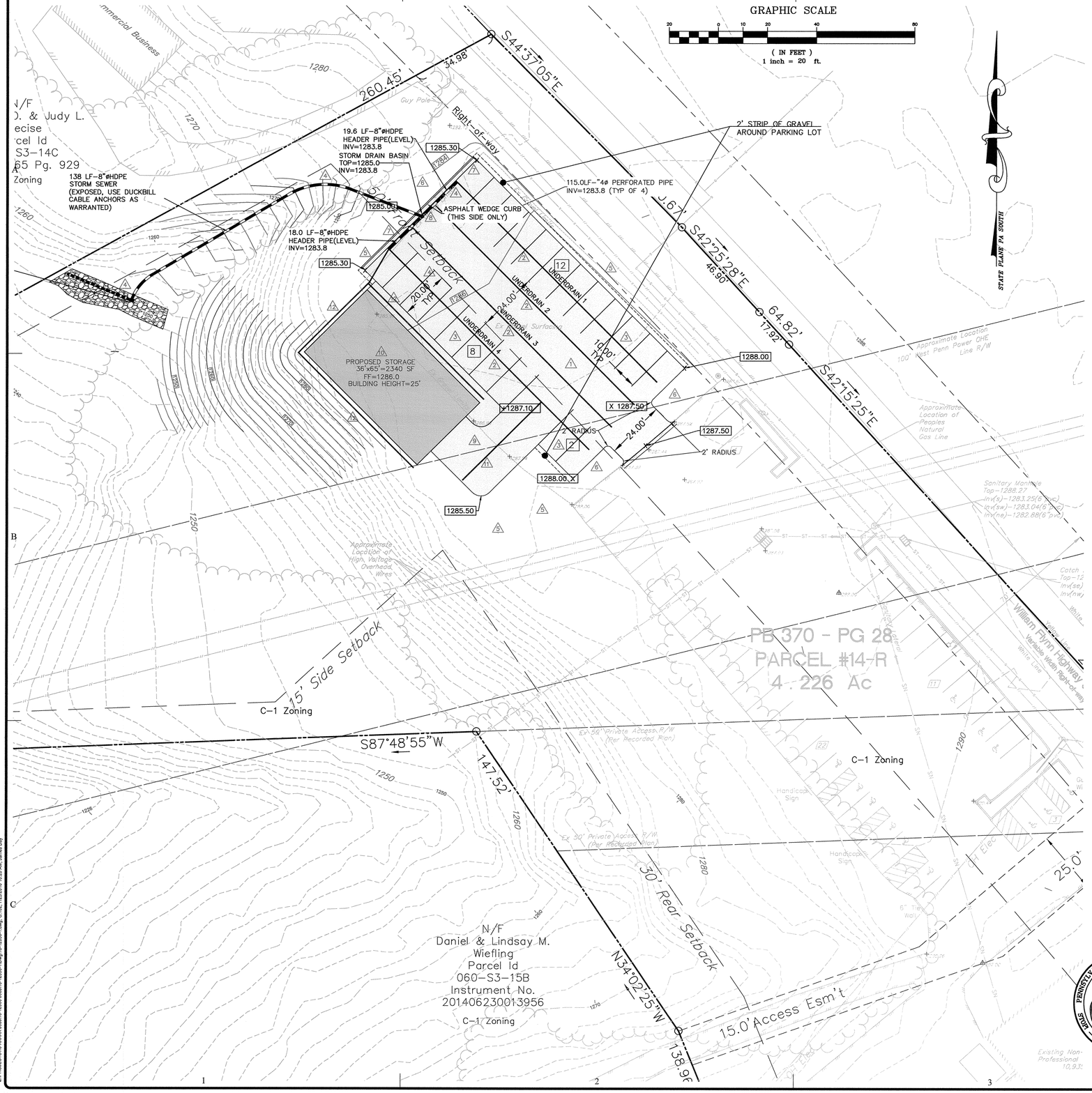

NOTES:
1. ALL DEED OR PLAN BEARINGS AND COORDINATES HAVE BEEN ROTATED AND CONVERTED TO PA STATE PLANE COORDINATE SYSTEM SOUTH ZONE, NORTH AMERICAN DATUM OF 1983. BEARINGS HAVE BEEN ROTATED 0°52'18" COUNTERCLOCKWISE FROM THE BEARINGS PROVIDED ON THE LOT LINE REVISION SUBDIVISION FOR MAC PROPERTIES(P.B.V. 276 PGS. 23) RECORDED IN BUTLER COUNTY RECORDER OF DEEDS.
2. TOPOGRAPHIC MAPPING IS BASED ON FIELD MEASUREMENTS. THE VERTICAL DATUM IS NORTH AMERICAN VERTICAL DATUM OF 1988 (NAVD88). FIELD MEASUREMENTS WERE OBTAINED ON AUGUST 14, 2017.
3. THE UNDERGROUND UTILITIES SHOWN HAVE BEEN LOCATED FROM FIELD SURVEY INFORMATION AND EXISTING DRAWINGS. THE SURVEYOR MAKES NO GUARANTEE THAT THE UNDERGROUND UTILITIES SHOWN COMPRISE ALL SUCH UTILITIES IN THE AREA, EITHER IN SERVICE OR ABANDONED. THE SURVEYOR FURTHER DOES NOT WARRANT THAT THE UNDERGROUND UTILITIES SHOWN ARE IN THE EXACT LOCATION INDICATED ALTHOUGH HE DOES CERTIFY THAT THEY ARE LOCATED AS ACCURATELY AS POSSIBLE FROM INFORMATION AVAILABLE. THE SURVEYOR HAS NOT PHYSICALLY LOCATED THE UNDERGROUND UTILITIES.
4. CONTRACTOR SHALL CONTACT PA. ONE CALL AT 1-800-242-1776 NOT LESS THAN 3-10 WORKING DAYS PRIOR TO DIGGING.
5. RIGHT OF WAY WAS ESTABLISHED USING PENNDOT HIGHWAY PLANS, ROUTE 0073, SECTION NO. R-4, SHEET 4 OF 28 AND 5 OF 28.

PROPOSED LEGEND

	POROUS PAVEMENT
1234.56 X	SPOT ELEVATION

LEGEND

OVERHEAD ELECTRIC LINE	EDGE OF PAVEMENT
GAS LINE	SURVEY MARKERS
SANITARY SEWER	LIGHT POLE
STORM SEWER	UTILITY POLE
GAS METER	CATCH BASIN
SANITARY MANHOLE	SIGNAL POLE
SIGN	WOOD LINE
1234.56 +	SPOT ELEVATION

PROPOSED CONSTRUCTION:

1. CONSTRUCT 64'WIDE x 120' LONG NOMINAL DIMENSION POROUS ASPHALT PAVEMENT, ATOP A 68'WIDE x 122'LONG AGGREGATE BED. EXISTING GRAVEL BED SHALL BE CUT/GRADED TO A NEAR-LEVEL PAD OF ELEVATION 1283.4. PRIOR TO PLACEMENT OF GEOFABRIC AT TOP OF SHAPED PAD, THE SURFACE SHALL BE SCORED CROSS-SLOPE, PERPENDICULAR TO LONG DIMENSION, AFTER PLACEMENT OF GEOTEXTILE, INITIALLY PLACE AN APPROXIMATE 0.4' LAYER OF AASHTO No.3 WASHED AGGREGATE BEDDING, UNIFORMLY TO LEVEL ELEVATION 1283.8.
2. INSTALL FOUR (4) RUNS OF 4"DIAMETER PERFORATED HDPE TUBING, OR SCH-40 PVC, AS UNDERDRAIN, PLACED LEVEL AT INVERT 1283.8. COVER WITH AASHTO No.3 AGGREGATE TO VARIABLE THICKNESS AS NEEDED FOR SLOPES OF PAVEMENT, AND TOP WITH CHOKER COURSE AS PER DETAIL BELOW. PERFORATED 4"ø PIPES SHALL BE CONNECTED TO A COMMON 12"DIAMETER SOLID HDPE PIPE. UPPER ENDS OF 4"PERFORATED PIPE SHALL BE CAPPED.
3. INSTALL 4"WIDE WHITE THERMOPLASTIC PARKING STALL LINES. PARKING STALLS ARE 20'x10'.
4. INSTALL 8"DIAMETER PERFORATED HDPE HEADER PIPE LEVEL SPREADER. OUTLET OF DISCHARGE PIPE SHALL BE COVERED WITH R-3 RIPRAP AS AN ENERGY DISSIPATER. SEE DETAIL BELOW.
5. ALL OTHER DISTURBED GRADING SHALL BE SMOOTH-GRADED, FINISH GRADE WITH 3" CLEAN TOPSOIL, SEEDED AND MULCHED. PERIMETER STONE EDGING SHALL BE EARTH BERMED AS WARRANTED TO ENSURE ALL PERIMETER STONE IS CONTAINED AND LEVEL WITH PAVEMENT EDGE.
6. REFER TO LANDSCAPING PLAN AND LIGHTING PLAN FOR FURTHER WORK ITEMS AND DETAILS.
7. INSTALL ASPHALT WEDGE CURB.
8. INSTALL ADS STORM SEWER BASIN AND GRATE TOP.
9. EXCAVATE DRIVEWAY FOOTPRINT TO A NEAR-LEVEL PAD OF ELEVATION 1283.4. PLACE OF GEOFABRIC AT TOP OF SHAPED PAD, AND THEN PLACE AN APPROXIMATE 0.4' LAYER OF AASHTO No.3 WASHED AGGREGATE BEDDING, UNIFORMLY TO LEVEL ELEVATION 1283.8. PLACE POROUS ASPHALT PAVEMENT AS FINAL COVER.
10. CONSTRUCT NEW WAREHOUSE, WITH PERIMETER FOOTER.
11. INSTALL 45 LF OF 4"DIAMETER PERFORATED HDPE TUBING, OR SCH-40 PVC, AS UNDERDRAIN, PLACED LEVEL AT INVERT 1283.8
12. INSTALL SOLID 6"DIAMETER ROOF DRAIN HEADER PIPES, WITH DOWN SPOUTS CONNECTED.

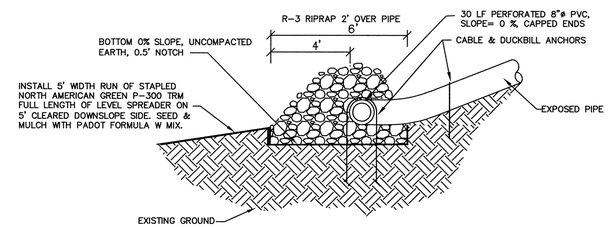

1 / C.102 LEVEL SPREADER DETAIL
Scale: N.T.S.

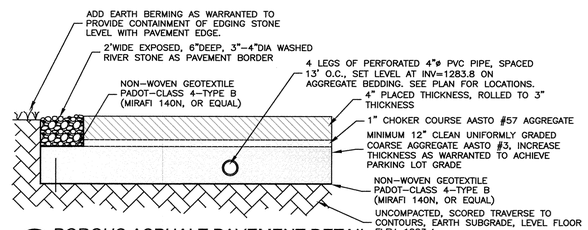

2 / C.102 POROUS ASPHALT PAVEMENT DETAIL
Scale: N.T.S.

NOTES:
1. BITUMINOUS BINDER DRAIN DOWN NOT TO EXCEED 0.3%, PER ASTM D6390.
2. USE ASPHALT BINDER MODIFIED WITH AN ELASTOMER POLYMER (SBS) APPLIED AT 3% WEIGHT OF TOTAL BINDER.
3. REFER TO PA STORMWATER BEST MANAGEMENT PRACTICES MANUAL – CHAPTER 6 – BMP 6.4.1 FOR ADDITIONAL SPECIFICATIONS THAT APPLY.
4. 4" BAND SEAL WITH PG 64-22 SHOULD BE APPLIED AT THE INTERFACE OF EXISTING PAVEMENT.

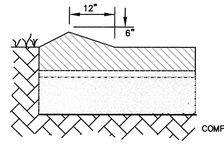

3 / C.102 ASPHALT WEDGE CURB DETAIL
Scale: N.T.S.

NOTES:
1. REFER TO DETAIL 2 THIS SHEET FOR MATERIAL SPECIFICATIONS.

PENNSYLVANIA ONE CALL SYSTEM, INC. — 1-800-242-1776 — CALL BEFORE YOU DIG
SERIAL NUMBER 20172502451 DATED 7-28-2017

PLAN BOOK	PAGE
373	18

COMMONWEALTH OF PENNSYLVANIA — REGISTERED PROFESSIONAL — JAMES A. DAY — ENGINEER PE-045099-E — SURVEYOR
X _____

HAMPTON TECHNICAL ASSOCIATES
ENGINEERING LAND SURVEYORS
ESTABLISHED 1960
www.hampton-technical.com
☒ Corporate Office
Etna Technical Center
35 Wilson Street, Suite 201
Pittsburgh, PA 15223
PHONE: (412) 781-9660
FAX: (412) 781-5904
☐ Mars Office
123 Ridge Road, Suite B
Valencia, PA 16059
PHONE: (724) 625-4544
FAX: (724) 625-4549

DATE ISSUED: 04-26-2018
PROJECT STATUS: Final
REVISIONS:

NO.	DESCRIPTION	DATE

DRAWING ORIENTATION

PROJECT TITLE:
New Parking Lot & Building
Site Development Plan
Center Township, Butler County, Pa

CLIENT ADDRESS: A&D Holding, Inc. 2861 Clearview Road, Allison Park, Pa 15101

PROJECT LOCATION: 1610 North Main Extension Butler, Pa 16001

DRAWN BY:	CHECKED BY:
DKL	JD
CAD FILE:	18-12630-1.dwg
HORZ. SCALE:	VERT. SCALE:
1"=20'	
SHEET:	OF
C.102	
PROJECT #:	18-12630-1

Z:\PROJECTS\18-XXXXX Jobs\18-12600 Jobs\18-12630-1\Dwg\18-12630-1.dwg, C.102, 7/25/2018 10:20 AM, James Day

MAP SYMBOL	SOIL NAME	HYDROLOGICAL CLASS	ERODIBLE	CUT BANKS CAVE	CORROSIVE TO CONCRETE OR STEEL	HIGH WATER TABLE	LOW STRENGTH	PIPING	POOR TOPSOIL	SHRINK-SWELL	PIPING	FROST ACTION
BrC	BRINKERTON SILT LOAM 8-15 % SLOPES	D	X	X	C/S	X	X	X	X	X	X	X
GoF	GILPIN-WEIKERT CHANNERY SILT LOAM 25-70% SLOPES	C	X	X	C		X	X	X		X	X
UeB	URBAN LAND - ERNEST COMPLEX 0-8 % SLOPES	C	X	X	C/S	X	X	X	X	X	X	X

SITE SOILS INFORMATION

PLAN BOOK	PAGE
373	19

GRAPHIC SCALE
20 0 10 20 40 80
(IN FEET)
1 inch = 20 ft.

STATE PLANE PA SOUTH

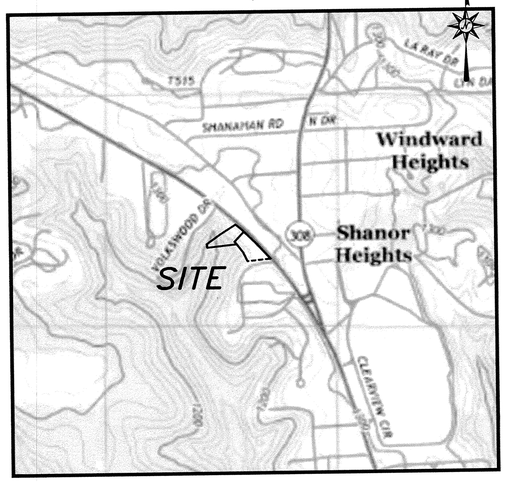

USGS Map

Mt Chestnut Quad - 2016
Scale - 1" = 1000'

LEGEND		PROPOSED LEGEND
OVERHEAD ELECTRIC LINE	EDGE OF PAVEMENT	POROUS PAVEMENT
GAS LINE	SURVEY MARKERS	SPOT ELEVATION
SANITARY SEWER	LIGHT POLE	SOIL TYPE DESIGNATION
STORM SEWER	UTILITY POLE	
GAS METER	CATCH BASIN	
SANITARY MANHOLE	SIGNAL POLE	
SIGN	SURVEY DELINEATION LINE	
SPOT ELEVATION	WOOD LINE	

CONSTRUCTION CRITICAL STAGES:

1. OBSERVE AND CONFIRM THE EXCAVATED PARKING LOT FLOOR IS RELATIVELY LEVEL AND SCORED CROSS-SLOPE.
2. OBSERVE AND CONFIRM THAT GEOTEXTILE AND PARTIAL LAYER OF BED AGGREGATE SHOULD BE PLACED IMMEDIATELY AFTER APPROVAL OF SUBGRADE PREPARATION. ENSURE THAT CLEAN WASHED AND UNIFORMLY GRADED AGGREGATE IS USED. REJECT THE AGGREGATE IF FINES, SAND AND SOIL IS OBSERVED.
3. OBSERVE AND CONFIRM THE PERFORATED UNDERDRAIN PIPING ARE INSTALLED LEVEL AND AT THE CORRECT ELEVATION, AS PER CONSTRUCTION PLAN.
4. OBSERVE AND CONFIRM THE UNDERDRAINS ARE CONNECTED TO A COMMON HEADER PIPE, AND THE HEADER PIPE IS CONNECTED TO LEVEL SPREADER PIPE.
5. OBSERVE THAT THE LEVEL SPREADER IS ANCHORED, ENDS-CAPPED , INSTALLED RELATIVELY LEVEL , AND PROTECTED WITH RIP RAP AT DISCHARGE.
6. OBSERVE AND CONFIRM THE PAVEMENT SUBGRADE AGGREGATE IS PLACED AT MINIMUM THICKNESS, OR GREATER.
7. OBSERVE THE PLACEMENT OF POROUS ASPHALT PAVEMENT, THAT ITS INITIAL LAYER THICKNESS IS CORRECT, AND ROLLED MINIMALLY FOR FINAL COMPACTED THICKNESS

STORMWATER MANAGEMENT PLAN NOTES:

1. AS A CONDITION OF APPROVAL OF THIS PLAN, AN INGRESS/EGRESS EASEMENT IS IMPLIED IN FAVOR OF THE MUNICIPALITY OR THEIR DESIGNEES FOR ACCESS TO AND AROUND THE STORMWATER MANAGEMENT FACILITIES.
2. THE PROPERTY OWNER, BY RECORDING OF THIS PLAN, ACKNOWLEGES THE STORMWATER MANAGEMENT FACILITIES ARE FIXTURES THAT CANNOT BE ALTERED OR REMOVED WITHOUT PRIOR APPROVAL BY THE MUNICIPALITY.
3. THE OPERATION AND MAINTENANCE (O&M) AGREEMENT IS A PART OF THIS STORMWATER MANAGEMENT PLAN.
4. THE PROPERTY OWNER IS RESPONSIBLE FOR THE OPERATION AND MAINTENANCE OF THE STORMWATER MANAGEMENT FACILITY.
5. RECORD DRAWINGS WILL BE PROVIDED FOR THE INSTALLED STORMWATER MANAGEMENT FACILITIES PRIOR TO RELEASE OF SURETY BOND.

STORMWATER MAINTENANCE PROGRAM

- THE PROPERTY OWNER SHALL MAINTENANCE ALL STORMWATER MANAGEMENT FACILITIES.
- THE MAINTENANCE REQUIREMENTS FOR THE PERVIOUS ASPHALT PAVEMENT REQUIRES ANNUAL VACUUM SWEEPING, TO REMOVE ANY ANTI-SKID AND SALTING MATERIALS.
- ANNUALLY, INSPECT THE LEVEL SPREADER, FOR EROSION PREVENTION, WITH APPLICATION OF ADDITIONAL R-3 RIPRAP ADDED AS WARRANTED TO AVOID RILLS AND GULLY EROSION POTENTIAL.

PROPOSED SWM CONSTRUCTION:

- CONSTRUCT 64'WIDE x 120' LONG NOMINAL DIMENSION POROUS ASPHALT PAVEMENT, ATOP A 68'WIDE x 122'LONG AGGREGATE BED. EXISTING GRAVEL BED SHALL BE CUT/GRADED TO A NEAR-LEVEL PAD OF ELEVATION 1283.4. PRIOR TO PLACEMENT OF GEOFABRIC AT TOP OF SHAPED PAD, THE SURFACE SHALL BE SCORED CROSS-SLOPE, PERPENDICULAR TO LONG DIMENSION, AFTER PLACEMENT OF GEOTEXTILE, INITIALLY PLACE AN APPROXIMATE 0.4' LAYER OF AASHTO No.3 WASHED AGGREGATE BEDDING, UNIFORMLY TO LEVEL ELEVATION 1283.8.
- INSTALL FOUR (4) RUNS OF 4"DIAMETER PERFORATED HDPE TUBING, OR SCH-40 PVC, AS UNDERDRAIN, PLACED LEVEL AT INVERT 1283.8. COVER WITH AASHTO No.3 AGGREGATE TO VARIABLE THICKNESS AS NEEDED FOR SLOPES OF PAVEMENT, AND TOP WITH CHOKER COURSE AS PER DETAIL BELOW. PERFORATED 4"ø PIPES SHALL BE CONNECTED TO A COMMON 12"DIAMETER SOLID HDPE PIPE. UPPER ENDS OF 4"PERFORATED PIPE SHALL BE CAPPED.
- INSTALL 12"DIAMETER PERFORATED HDPE HEADER PIPE LEVEL SPREADER. OUTLET OF DISCHARGE PIPE SHALL BE COVERED WITH R-3 RIPRAP AS AN ENERGY DISSIPATER. SEE DETAIL BELOW.
- ALL OTHER DISTURBED GRADING SHALL BE SMOOTH-GRADED, FINISH GRADE WITH 3" CLEAN TOPSOIL, SEEDED AND MULCHED. PERIMETER STONE EDGING SHALL BE EARTH BERMED AS WARRANTED TO ENSURE ALL PERIMETER STONE IS CONTAINED AND LEVEL WITH PAVEMENT EDGE.

STORMWATER MANAGEMENT PLAN CERTIFICATION:

I, JAMES DAY, P.E., HEREBY CERTIFY THAT THE STORMWATER MANAGEMENT PLAN MEETS ALL DESIGN STANDARDS AND CRITERIA OF THE CENTER TOWNSHIP'S STORMWATER MANAGEMENT ORDINANCE.

_____

I, _____, HAVE REVIEWED THIS STORMWATER MANAGEMENT PLAN IN ACCORDANCE WITH THE DESIGN STANDARDS AND CRITERIA OF THE CENTER TOWNSHIP'S STORMWATER MANAGEMENT ORDINANCE.

_____

PENNSYLVANIA ONE CALL SYSTEM, INC. 811 PA 1-800-242-1776 CALL BEFORE YOU DIG

SERIAL NUMBER 20172502451
DATED 7-26-2017

NOT FOR CONSTRUCTION USE - THIS PLAN
FOR STORMWATER MANAGEMENT GRAPHICAL USE ONLY

UNT TO SULLIVAN RUN, CONNOQUENESSING CREEK
CHAPTER 93 CLASSIFICATION: CWF

COMMONWEALTH OF PENNSYLVANIA REGISTERED PROFESSIONAL JAMES A. DAY ENGINEER PE-045599-E

HAMPTON TECHNICAL ASSOCIATES
ENGINEERING LAND SURVEYORS
ESTABLISHED 1960
www.hampton-technical.com

☒ Corporate Office
Etna Technical Center
35 Wilson Street, Suite 201
Pittsburgh, PA 15223
PHONE: (412) 781-9660
FAX: (412) 781-5904

☐ Mars Office
123 Ridge Road, Suite B
Valencia, PA 16059
PHONE: (724) 625-4544
FAX: (724) 625-4549

REVISIONS: NO.	DESCRIPTION	DATE

PROJECT STATUS: Final

DATE ISSUED: 04-26-18

DRAWING ORIENTATION

PROJECT TITLE:
New Parking Lot & Building
SWM Site Plan
Center Township. Butler County, Pa

CLIENT ADDRESS:
A&D Holding, Inc.
20661 Clearview Road, Allison Park, Pa 15101

PROJECT LOCATION:
1610 North Main Extension
Butler, Pa 16001

DRAWN BY:	CHECKED BY:
DKL	JD
CAD FILE:	18-12630-1.dwg
HORZ. SCALE: 1"=20'	VERT. SCALE:
SHEET:	OF
C.206	
PROJECT #:	18-12630-1

Z:\PROJECTS\18-XXXXX Jobs\18-12600 Jobs\18-12630-1\Dwg\18-12630-1.dwg, C.206, 7/25/2018 10:22 AM, James Day

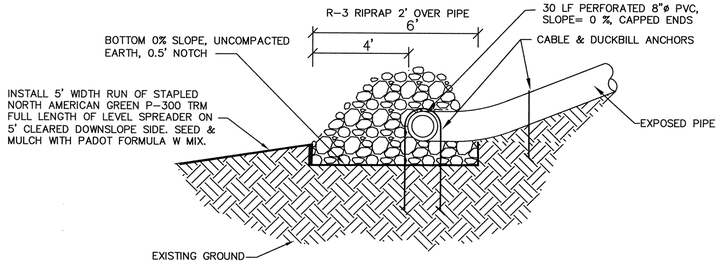

1 / C.205 **LEVEL SPREADER DETAIL**

Scale: N.T.S.

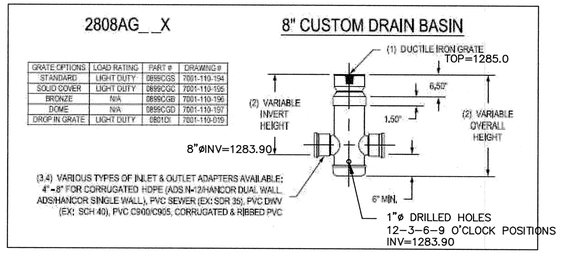

GRATE OPTIONS	LOAD RATING	PART #	DRAWING #
STANDARD	LIGHT DUTY	0895CGS	7001-110-104
SOLID COVER	LIGHT DUTY	0895CGC	7001-110-106
BRONZE	N/A	0895CGB	7001-110-196
DOME	N/A	0895CGD	7001-110-197
DROP IN GRATE	LIGHT DUTY	0801DI	7001-110-019

Nyloplast
3130 VERONA AVE
BUFORD, GA 30518
PHN (770) 932-2443
FAX (770) 932-2490
www.nyloplast-us.com

TITLE: DRAIN BASIN DESIGN DETAILS

DWG NO. 7001-110-045 REV G

3 / C.205 **DRAIN BASIN DETAIL**

Scale: N.T.S.

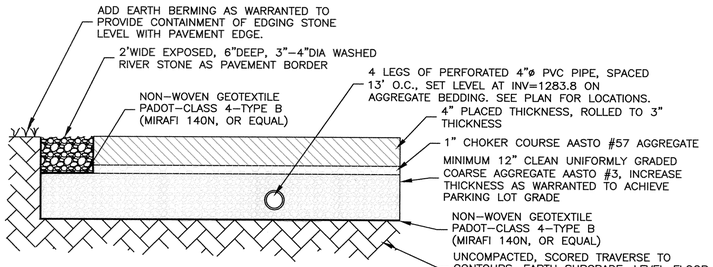

2 / C.206 **POROUS ASPHALT PAVEMENT DETAIL**

Scale: N.T.S.

NOTES:
1. BITUMINOUS BINDER DRAIN DOWN NOT TO EXCEED 0.3%, PER ASTM D6390.
2. USE ASPHALT BINDER MODIFIED WITH AN ELASTOMER POLYMER (SBS) APPLIED AT 3% WEIGHT OF TOTAL BINDER.
3. REFER TO PA STORMWATER BEST MANAGEMENT PRACTICES MANUAL – CHAPTER 6 – BMP 6.4.1 FOR ADDITIONAL SPECIFICATIONS THAT APPLY.
4. 4" BAND SEAL WITH PG 64-22 SHOULD BE APPLIED AT THE INTERFACE OF EXISTING PAVEMENT.

STORMWATER MANAGEMENT FACILITY
DETENTION BED- CONFIGURATION & SUMMARY

- 122' LONG X 68' WIDE MINIMUM OUTSIDE DIMENSIONS
- STONE BED FLOOR ELEVATION AT 1283.40 (LEVEL +/-2" OVER 100')
- INVERT FOUR LEGS OF 4"PERFORATED HDPE UNDERDRAINS = 1283.80
- MINIMUM TOP OF AASHTO #3 AGGREGATE= 1284.5 (SEE PLAN, USE PROPOSED SPOT ELEV MINUS 0.43')
- 1" CHOKE LAYER AGGREGATE ATOP #3 BED AGGREGATE
- FINISHED ROLLED POROUS ASPHALT ELEV = 1285.0 TO 1288.0 (SEE PLAN FOR PROPOSED ELEV SPOTS)

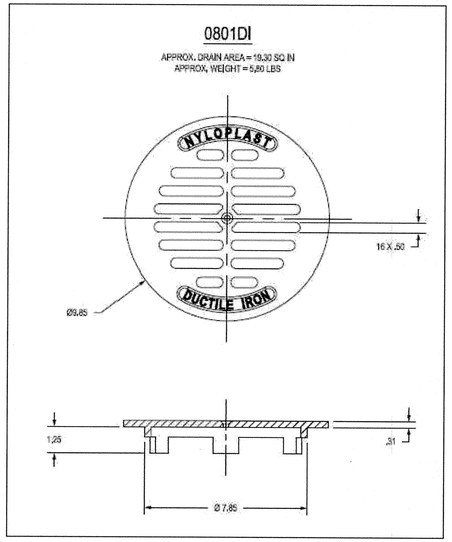

Nyloplast
3130 VERONA AVE
BUFORD, GA 30518
PHN (770) 932-2443
FAX (770) 932-2490
www.nyloplast-us.com

TITLE: 8 IN DROP IN

DWG NO. 7001-110-019 REV D

4 / C.205 **DRAIN BASIN GRATE DETAIL**

Scale: N.T.S.

PLAN BOOK	PAGE
373	20

COMMONWEALTH OF PENNSYLVANIA
REGISTERED PROFESSIONAL
JAMES A. DAY
ENGINEER
PE-040509-E

X _____

HAMPTON TECHNICAL ASSOCIATES
ENGINEERING LAND SURVEYORS
ESTABLISHED 1960
www.hampton-technical.com

☒ Corporate Office
Etna Technical Center
35 Wilson Street, Suite 201
Pittsburgh, PA 15223
PHONE: (412) 781-9660
FAX: (412) 781-5904

☐ Mars Office
123 Ridge Road, Suite B
Valencia, PA 16059
PHONE: (724) 625-4544
FAX: (724) 625-4549

NO.	DESCRIPTION	DATE

DATE ISSUED: 04-26-18
REVISIONS:
PROJECT STATUS: Final

DRAWING ORIENTATION

PROJECT TITLE:
New Parking Lot & Building
SWM Details & Notes
Center Township. Butler County, Pa

PROJECT LOCATION:
1610 North Main Extension
Butler, Pa 16001

CLIENT ADDRESS:
A&D Holding, Inc.
2861 Clearview Road, Allison Park, Pa 15101

DRAWN BY:	CHECKED BY:
DKL	JD
CAD FILE:	18-12630-1.dwg
HORZ. SCALE: As Noted	VERT. SCALE:
SHEET:	OF
C.207	
PROJECT #:	18-12630-1

Z:\PROJECTS\18-XXXXX Jobs\18-12600 Jobs\18-12630-1\Dwg\18-12630-1.dwg, C.207, 7/23/2018 10:22 AM, James Day

Instr:201809180019072 09/18/2018
Pages:1 F:$45.00 11:15PM
Michele Mustello T201800013697
Butler County Recorder PL

KNOW ALL MEN BY THESE PRESENTS; THAT JANET L. McKNIGHT, DO HEREBY ADOPT THIS PLAN AS ITS PLAN OF LOTS OF ITS PROPERTY SITUATE IN SLIPPERY ROCK TOWNSHIP, BUTLER COUNTY, PENNSYLVANIA, AND FOR DIVERS ADVANTAGES ACCRUING TO IT, DO HEREBY DEDICATE FOREVER, FOR PUBLIC USE FOR HIGHWAY PURPOSES ALL SLOPE AREAS AND ALL DRIVES, ROADS, STREETS, LANES, WAYS AND OTHER PUBLIC HIGHWAYS SHOWN UPON THE PLAN, WITH THE SAME FORCE AND EFFECT AS IF THE SAME HAD BEEN THROUGH LEGAL PROCEEDINGS, AND IN CONSIDERATION OF THE APPROVAL OF SAID PLAN, AND ANY FUTURE ACCEPTANCE OF SAID PUBLIC HIGHWAYS BY THE COMMONWEALTH OF PENNSYLVANIA, COUNTY OF BUTLER, AND TOWNSHIP OF SLIPPERY ROCK, JANET L. McKNIGHT, HEREBY COVENANTS AND AGREES TO AND BY THESE PRESENTS DOES RELEASE AND FOREVER DISCHARGE SAID COMMONWEALTH OF PENNSYLVANIA, COUNTY OF BUTLER, AND TOWNSHIP OF SLIPPERY ROCK, THEIR SUCCESSORS OR ASSIGNS FROM ANY LIABILITY FOR DAMAGES ARISING AND TO ARISE FROM THE APPROPRIATION OF SAID GROUND FOR PUBLIC HIGHWAYS AND THE PHYSICAL GRADING THEREOF TO ANY GRADES THAT MAY BE ESTABLISHED. THIS DEDICATION AND RELEASE SHALL BE BINDING UPON JANET L. McKNIGHT, OUR SUCCESSORS AND ASSIGNS AND PURCHASERS OF LOTS IN THIS PLAN.

IN WITNESS WHEREOF, WE, HEREUNTO SET OUR HAND AND SEAL OF 9-11 20 18.

Janet L. McKnight
OWNER

COMMONWEALTH OF PENNSYLVANIA) SS:
COUNTY OF BUTLER) MERCER

BEFORE ME, THE SUBSCRIBER, A NOTARY PUBLIC IN AND FOR SAID COMMONWEALTH AND COUNTY, PERSONALLY APPEARED ABOVED NAMED JANET L. McKNIGHT AND ACKNOWLEDGED THE FOREGOING RELEASE AND DEDICATION AND PLAN TO BE OUR ACT AND DEED AND DESIRE THE SAME TO BE RECORDED AS SUCH.

SWORN AND SUBSCRIBED BEFORE ME THIS DAY.

WITNESS MY HAND AND SEAL THIS 11th DAY OF SEPTEMBER 2018.

MY COMMISSION EXPIRES THE 21st DAY OF FEBRUARY 2019.

COMMONWEALTH OF PENNSYLVANIA
NOTARIAL SEAL
Constance A. Close, Notary Public
Pine Twp., Mercer County
My Commission Expires Feb. 21, 2019
MEMBER, PENNSYLVANIA ASSOCIATION OF NOTARIES

Constance A. Close
NOTARY PUBLIC

APPROVED BY THE SLIPPERY ROCK TOWNSHIP PLANNING COMMISSION THIS 14th DAY OF September, 20 18.

Vonnie J. Hogg
SECRETARY

CHAIRMAN

THE BOARD OF SUPERVISORS OF THE TOWNSHIP OF SLIPPERY ROCK HEREBY GIVES PUBLIC NOTICE THAT IN APPROVING THIS PLAN FOR RECORDING PURPOSES ONLY, THE TOWNSHIP OF SLIPPERY ROCK ASSUMES NO OBLIGATIONS, LEGAL OR OTHERWISE, EXPRESSED OR IMPLIED, EITHER TO ACCEPT SAID STREETS AS TOWNSHIP STREETS, OR ROADS, OR GRADES, PAVE AND CURB THE STREETS IN SAID PLAN, OR TO CONSTRUCT SEWERS THEREIN OR TO INSTALL ANY OTHER SUCH SERVICE ORDINARILY INSTALLED IN TOWNSHIP STREETS OR ROADS.

APPROVED BY THE BOARD OF SUPERVISORS OF THE TOWNSHIP OF SLIPPERY ROCK, THIS 14th DAY OF September, 20 18.

Karen Connell
SECRETARY

Paul A. Dick
CHAIRMAN, BOARD OF SUPERVISORS

SUPERVISOR

I, JEFFREY A. SHUTY, A PROFESSIONAL LAND SURVEYOR OF THE COMMONWEALTH OF PENNSYLVANIA, DO HEREBY CERTIFY, TO THE BEST OF MY KNOWLEDGE, INFORMATION AND BELIEF, THAT THIS PLAN CORRECTLY REPRESENTS THE LOTS, LANDS, STREETS, AND HIGHWAYS AS SURVEYED AND PLOTTED BY ME FOR THE OWNERS AND OR AGENTS.

9/11/18
DATE

REG. NO. SU075509

REVIEWED BY THE BUTLER COUNTY PLANNING COMMISSION THIS 17th DAY OF JAN. 2018.

SECRETARY

CHAIRMAN

BUTLER COUNTY PLANNING COMMISSION

COMMONWEALTH OF PENNSYLVANIA) SS:
COUNTY OF BUTLER)

RECORDED IN THE RECORDERS OFFICE FOR THE RECORDING OF DEEDS, PLANS, ETC. IN SAID COUNTY IN PLAN BOOK VOLUME 373 PAGE 21

GIVEN UNDER MY HAND AND SEAL THIS 18th DAY OF September 2018.

Michele M. Mustello

MICHELE M. MUSTELLO
RECORDER OF DEEDS
My Commission Expires First Monday in January 2020

RECORDER OF DEEDS
BUTLER COUNTY, PA.

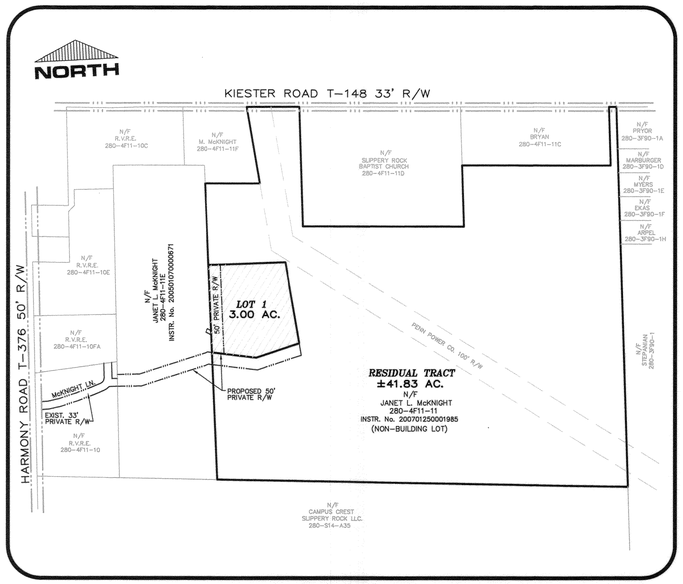

RESIDUAL MAP
1" = 300'

RIGHT-OF-WAY NOTE:

THE PRIVATE RIGHT-OF-WAY AS SHOWN ON THIS PLAN SHALL BE THE EXCLUSIVE MEANS OF VEHICULAR AND/OR PEDESTRIAN ENTRY, EGRESS AND REGRESS TO/FROM LOTS 1, AND TAX #280-4F11-11E AS PREVIOUSLY RECORDED, INCLUSIVE.

RESERVING UNTO THE GRANTOR THEIR HEIRS AND ASSIGNS THE RIGHT TO USE IN COMMON WITH THE GRANTEES, THEIR HEIRS AND ASSIGNS.

THE PRIVATE RIGHT-OF-WAY IS NOT INTENDED AS A PUBLIC ROAD/STREET, HAS NOT BEEN DEDICATED FOR PUBLIC USE AND HAS NOT BEEN ACCEPTED AS A PUBLIC ROAD/STREET BY SLIPPERY ROCK TWP.

The maintenance and/or repair of nonpublic streets shall be the full and sole responsibility of the owners of Lots 1, and Tax Parcel 280-4F11-11E and owners with access rights.

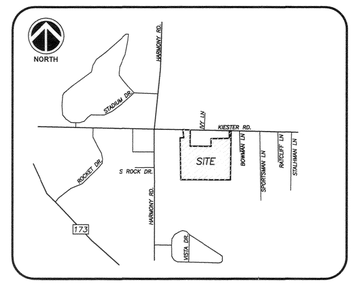

VICINITY MAP
NOT TO SCALE

NON-BUILDING WAIVER
RESIDUAL TRACT

"As of the date of this deed/plot plan recording, the property/subdivision described herein is and shall be dedicated for the express purpose of AGRICULTURAL use. No portion of the RESIDUAL TRACT of this property/subdivision has been approved by SLIPPERY ROCK TOWNSHIP (Municipality) or the Department of Environmental Protection (DEP) for the installation of sewage disposal facilities. No sewage permit will be issued for the installation, construction, connection to or use of any sewage collection, conveyance, treatment or disposal system (except for repairs to existing systems) unless the municipality and DEP have both approved sewage facilities planning for the property/subdivision described herein in accordance with the Pennsylvania Sewage Facilities Act (35 P.S. Sections 750.1 et seq.) and regulations promulgated thereunder. Prior to signing, executing, implementing or recording any sales contract or subdivision plan, any purchaser or subdivider of any portion of this property should contact appropriate officials of SLIPPERY ROCK TOWNSHIP (municipality), which is charged with administering the Sewage Facilities Act to determine what sewage facilities planning is required and the procedure and requirements for obtaining appropriate permits or approvals."

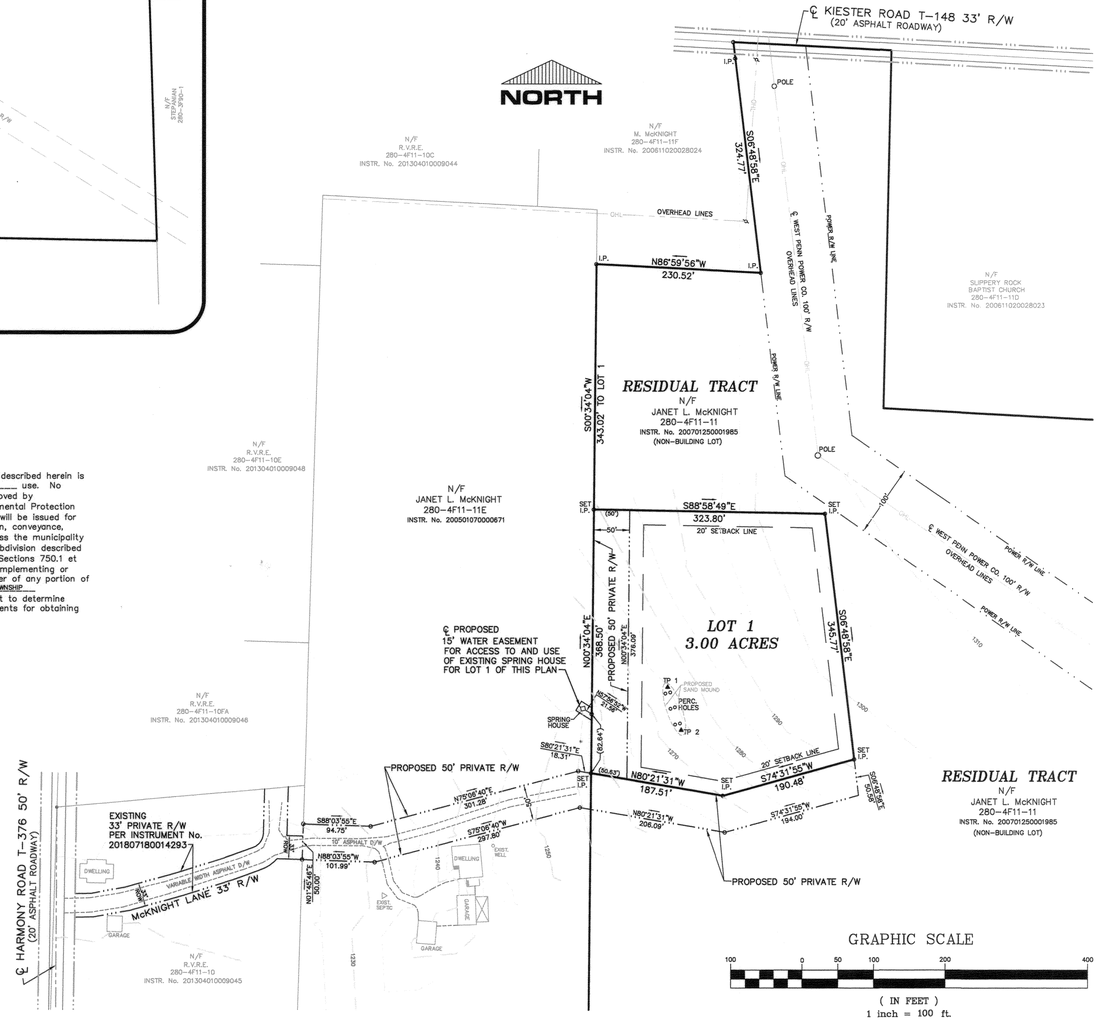

ZONING U-1	
ALL USES	
MIN. LOT AREA	25,000 SQ. FT
MIN. LOT WIDTH	100'
BUILDING SET BACKLINES:	
FRONT YARD	20'
SIDE YARD	20'
REAR YARD	20'
MAX. HEIGHT	45'
MAX. COVERAGE	25%

TOTAL PLAN AREA	±44.83 ACRES
RESIDUAL TRACT	±41.83 ACRES
LOT 1	3.00 ACRES

TAX PARCEL #280-4F11-11

DEED REF: 200701250001985
PBV 296 PG. 47

OWNER:
JANET L. McKNIGHT
200 McKNIGHT LANE
SLIPPERY ROCK, PA 16057
724-290-6938

PLAN BOOK	PAGE
373	21

COMMONWEALTH OF PENNSYLVANIA
REGISTERED PROFESSIONAL
JEFFREY A. SHUTY
LAND SURVEYOR (No. SU075509)

NORTHERN
SURVEYORS AND ASSOCIATES
137 LINK LANE
SLIPPERY ROCK, PA 16057
(724)530-6889

Scale 1" = 100'
Date DEC. 15, 2017
JAN. 19, 2018
AUG. 16, 2018

Job No. 2980

McKNIGHT SUBDIVISION

Situate in Slippery Rock Township
Butler County, Pa.

Prepared For
Janet L. McKnight

Sheet No. 1 of 1

BUTLER COUNTY PLANNING COMMISSION APPROVAL

APPROVED BY THE BUTLER COUNTY PLANNING COMMISSION THIS 18TH DAY OF July, 2018.

SECRETARY CHAIRMAN

SEE COMMENTS ON FILE AT THE BUTLER COUNTY PLANNING COMMISSION.

PLAN NUMBER: 18149

(SEAL)

MUNICIPAL APPROVAL

REVIEWED AND APPROVED (OR REVIEWED WITH COMMENTS) BY THE BOROUGH THIS 31 DAY OF July, 2018.

HARRISVILLE BOROUGH

SECRETARY CHAIRMAN

(SEAL)

OWNER CERTIFICATION

APPROVED BY THE PROPERTY OWNER THIS 30th DAY OF August, 2018.

OWNER

State of Pennsylvania

County of Mercer

This record was acknowledged before me on 8-30-18 [date] by

Mark Hartenbaugh [name of individual] as Trainer/Fac Mgr [title of individual] who

Represent that he/she is authorized to act on behalf of Mercer County State Bank [name of company].

Notary Signature

(Seal) COMMONWEALTH OF PENNSYLVANIA
NOTARIAL SEAL
Edith M. Bernarding, Notary Public
Sandy Lake Boro, Mercer County
My Commission Expires June 9, 2020
MEMBER, PENNSYLVANIA ASSOCIATION OF NOTARIES

BUTLER COUNTY
PENNSYLVANIA
Recorded in the Recorders office
of the said County on this 18 day
of September 2018
to ~~VOLUME~~ PLAN BOOK
No. 201809180019073 Book 373 pages 22-33
Witness my hand and the seal of said office.

RECORDER

MICHELE M. MUSTELLO
RECORDER OF DEEDS
My Commission Expires First Monday in January 2020

RECORDER OF DEEDS SEAL
BUTLER COUNTY, PA.

Instr:201809180019073 09/18/2018
Pages:12 F:$405.00 11:22am
Michele Mustello T20180013698
Butler County Recorder FL

FINAL LAND DEVELOPMENT PLAN

FOR

MERCER COUNTY STATE BANK
PROPOSED BANK SITE
PARCEL ID 430-S2-A21D-0000

BOROUGH OF HARRISVILLE
BUTLER COUNTY, PENNSYLVANIA

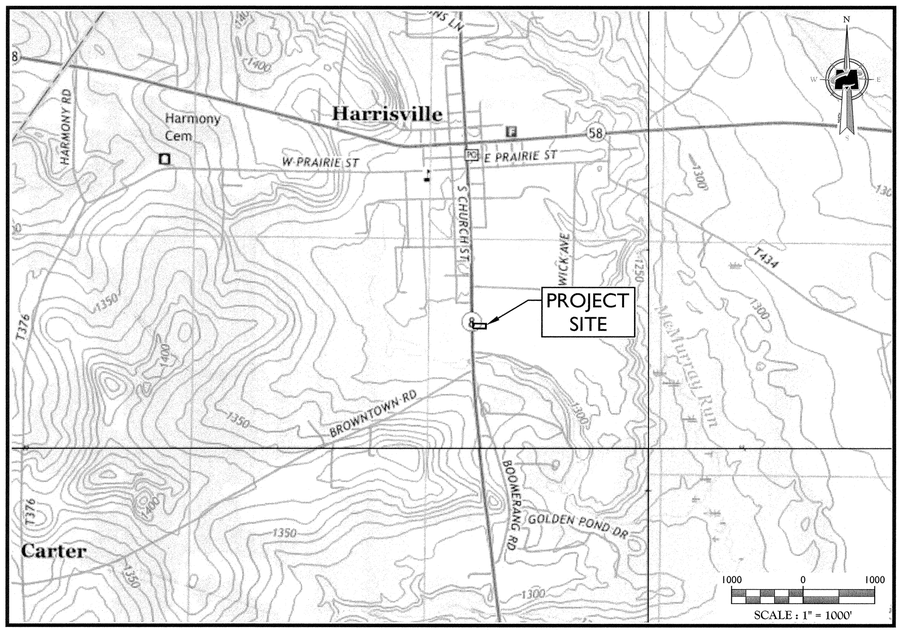

LOCATION MAP

BARKEYVILLE, GROVE CITY, SLIPPERY ROCK, & WEST SUNBURY
USGS QUADS

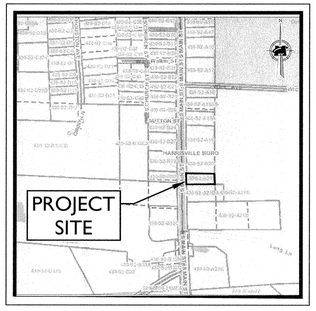

KEY MAP
NOT TO SCALE

INDEX OF SHEETS

SHT. No.	DESCRIPTION	LATEST REVISION
1	COVER SHEET	7/18/2018
2	SITE DEMOLITION PLAN	7/18/2018
3	DIMENSION PLAN	7/18/2018
4	GRADING PLAN	7/18/2018
5	UTILITY PLAN	7/18/2018
6	LANDSCAPE PLAN	7/18/2018
7	SOIL EROSION AND SEDIMENT CONTROL PLAN	7/18/2018
8-9	SOIL EROSION AND SEDIMENT CONTROL DETAILS	7/18/2018
10-11	CONSTRUCTION DETAILS	7/18/2018

20180001614\Engineering\Dsn Plans\C-CVER.dwg\C-01-COVER By: JCADWALLADER

GENERAL INFORMATION

1. PROPERTY IDENTIFICATION - BEING KNOWN AS TAX ID 430-S2-A21D IN THE BOROUGH OF HARRISVILLE, BUTLER COUNTY, PENNSYLVANIA. ADDRESS FOR THE SITE IS 549 SOUTH MAIN STREET (PA. ROUTE 8).
2. THE PROPERTY CONTAINS A TOTAL TRACT AREA OF 12,600 SQUARE FEET OR 0.2893 ACRES. THE PROPOSED USE IS ASSUMED TO BE PERMITTED, DUE TO THE BOROUGH HAVING NO ZONING ORDINANCE.

   APPLICANT/OWNER:
   MERCER COUNTY STATE BANK
   3279 SOUTH MAIN STREET,
   SANDY LAKE, PA 16145-0038
   TELEPHONE: 724.376.2100
3. STATEMENT OF INTENT - THE APPLICANT PROPOSES TO DEMOLISH THE EXISTING BUILDING/FACILITY AND CONSTRUCT A NEW BANK BUILDING WITH DRIVE-THRU, ASSOCIATED PARKING, ASSOCIATED UTILITY IMPROVEMENTS, AND PROPOSED ALTERATION TO THE CURB CUT TO PA. ROUTE 8.
4. BOUNDARY AND TOPOGRAPHIC INFORMATION SHOWN HEREON WAS OBTAINED FROM FIELD SURVEY PERFORMED ON MAY 8, 2018 AND PREPARED BY FIRST ORDER, LLC, PLAN DATED MAY 14, 2018.
5. MAP REFERENCES:
   a. A MAP ENTITLED: "BOUNDARY TOPOGRAPHIC SURVEY" PREPARED BY FIRST ORDER LLC, DATED MAY 14, 2018
6. THE EXISTENCE OF UNDERGROUND STORAGE TANKS, IF ANY, WAS NOT KNOWN AT THE TIME OF THIS SURVEY.
7. TOPOGRAPHIC INFORMATION SHOWN HEREON WAS TAKEN FROM GROUND SURVEY PERFORMED BY FIRST ORDER, LLC. THE LOCATION OF ALL UNDERGROUND UTILITIES AS SHOWN HEREON ARE APPROXIMATE AND ARE BASED ON VISIBLE SURFACE STRUCTURES AND ANY UTILITY MAPS PROVIDED BY UTILITY COMPANIES REFERENCED HEREON. NO EXCAVATIONS WERE MADE DURING THE PROGRESS OF THIS SURVEY TO LOCATE BURIED UTILITIES/STRUCTURES, ADDITIONAL BURIED UTILITIES/STRUCTURES MAY HAVE BEEN ENCOUNTERED, THE CONTRACTOR SHALL HAVE ALL UNDERGROUND UTILITIES FIELD-VERIFIED BY THE PROPER UTILITY COMPANIES BEFORE ANY CONSTRUCTION BEGINS.
8. HORIZONTAL DATUM: NORTH AMERICAN DATUM OF 1983 (NAD83) (PA. STATE PLAN COORDINATE SYSTEM - 3701 NORTH)
   VERTICAL DATUM: NORTH AMERICAN DATUM OF 1988 (NAVD88).
9. BENCHMARK: DOCK SPIKE ELEVATION = 1304.92'
10. CONCRETE MONUMENTS AND IRON PINS SHALL BE SET UPON APPROVAL OF THIS PLAN PRIOR TO RECORDING.
11. BULK REQUIREMENT PER BUTLER COUNTY SALDO:

	REQUIRED	EXISTING	PROPOSED
USE	PROFESSIONAL OFFICE/ BANK		
MINIMUM LOT SIZE	21,780 SF	12,600 SF 0.29 AC	12,600 SF 0.29 AC
MINIMUM YARD WIDTH @ BUILDING LINE	90 FT	70 FT	70 SF
BUILDING SETBACKS			
MINIMUM FRONT YARD	30 FT	52.59 FT	50.5 FT
MINIMUM REAR YARD	25 FT	21.69 FT	76 FT
MINIMUM SIDE YARD	15 FT	-0.90 FT	15.8 FT
MAX. BUILDING HEIGHT (FEET)	3 STORIES	2 STORIES	1 STORY
MAX. IMPERVIOUS COVERAGE	40% (5,040 SF)	52.97% (6,674 SF)	88.52% (11,154 SF)

12. PARKING CALCULATIONS:
    VEHICLE PARKING REQUIRED:
    1,323 SF @ 1 SPACE / 250 SF = 6 SPACES
    VEHICLE PARKING PROVIDED:
    PROPOSED SURFACE SPACES (INCLUDES ADA) = 9 SPACES
    ADA SPACES PROVIDED = 1 SPACES
13. THE SITE WILL BE SERVED BY A PRIVATE WELL AND PUBLIC SEWER.
14. THERE ARE NO KNOWN WETLANDS WITHIN THE PROPOSED DEVELOPMENT AREA.
15. BY GRAPHICAL REPRESENTATION ONLY THIS PROPERTY IS LOCATED IN FLOOD HAZARD ZONE X (UNSHADED) AS SHOWN ON FLOOD INSURANCE RATE MAPS, COMMUNITY PANEL NO. 42235 1B WHICH HAS AN EFFECTIVE DATE OF JUNE 30, 1976 AND IS NOT IN A SPECIAL FLOOD HAZARD AREA. FIELD SURVEYING WAS NOT PERFORMED TO DETERMINE THIS ZONE.
16. ALL SOILS ON SITE WERE TAKEN FROM THE USDA NATIONAL WEB SOIL SURVEY.
17. THE UNDERLYING ROCK FORMATION FOR THIS SITE IS THE ALLEGHENY FORMATION.
18. THE PROPOSED DEVELOPMENT IS LOCATED WITHIN THE CONNOQUENNESSING CREEK WATERSHED WITH AN ALLOWABLE RELEASE RATE OF 100%.
19. NO TOPSOIL SHALL BE REMOVED FROM THE SITE UNLESS AUTHORIZED BY THE BOROUGH OF HARRISVILLE, BUTLER COUNTY, AND/OR BUTLER COUNTY CONSERVATION DISTRICT.
20. EXCESS CONSTRUCTION WASTE AND DEBRIS SHALL BE REMOVED FROM THE SITE AT THE COMPLETION OF THE PROJECT. UNDER NO CIRCUMSTANCES SHALL SUCH MATERIAL BE ALLOWED TO BE BURIED OR USED AS BACKFILL MATERIAL.
21. MATERIALS, WORKMANSHIP, AND CONSTRUCTION FOR THE SITE IMPROVEMENTS SHOWN HEREON SHALL BE IN ACCORDANCE WITH:
    A. PENNSYLVANIA DEPARTMENT OF TRANSPORTATION "SPECIFICATIONS PUBLICATION 408", 2003: AS SUPPLEMENTED.
    B. CURRENT PREVAILING MUNICIPAL, COUNTY, AND/OR STATE AGENCY SPECIFICATIONS, STANDARDS, CONDITIONS, AND REQUIREMENTS.
    C. CURRENT PREVAILING UTILITY COMPANY/AUTHORITY SPECIFICATIONS, STANDARDS, AND REQUIREMENTS.
    D. CURRENT MANUFACTURER SPECIFICATIONS, STANDARDS, AND REQUIREMENTS.
22. UTILITY RELOCATIONS SHOWN HEREON, IF ANY, ARE FOR INFORMATIONAL PURPOSES ONLY AND MAY NOT REPRESENT ALL REQUIRED UTILITY RELOCATIONS. THE CONTRACTOR IS RESPONSIBLE FOR PERFORMING AND/OR COORDINATING ALL REQUIRED UTILITY RELOCATIONS IN COOPERATION WITH THE RESPECTIVE UTILITY COMPANY/ AUTHORITIES.
23. PROPER PIPE COVERAGE SHALL BE MAINTAINED DURING ALL PHASES OF CONSTRUCTION. PIPE LENGTHS SHOWN HEREON ARE FROM CENTER OF STRUCTURE TO CENTER OF STRUCTURE.
24. TRAFFIC SIGNAGE AND STRIPING SHALL CORRESPOND TO THE MANUAL ON UNIFORM TRAFFIC CONTROL DEVICES.
25. THIS IS A SITE DEVELOPMENT PLAN AND UNLESS SPECIFICALLY NOTED ELSEWHERE HEREON, IS NOT A SURVEY.
26. ALL STRUCTURES SHALL CONFORM TO THE APPROVED BULK SALDO REQUIREMENTS.
27. DO NOT SCALE DRAWINGS AS THEY PERTAIN TO ADJACENT AND SURROUNDING PHYSICAL CONDITIONS, BUILDINGS, STRUCTURES, ETC. THEY ARE SCHEMATIC ONLY, EXCEPT WHERE DIMENSIONS ARE SHOWN THERETO.
28. THIS SET OF PLANS HAS BEEN PREPARED FOR THE PURPOSES OF MUNICIPAL, COUNTY, AND AGENCY REVIEW AND APPROVAL. THIS SET OF PLANS SHALL NOT BE UTILIZED AS CONSTRUCTION DOCUMENTS UNTIL ALL APPROVALS REQUIRED HAVE BEEN OBTAINED, ALL CONDITIONS OF APPROVAL HAVE BEEN SATISFIED AND THE DRAWINGS HAVE BEEN STAMPED "ISSUED FOR CONSTRUCTION". THIS SHALL INCLUDE APPROVAL OF ALL CATALOG CUTS, SHOP DRAWINGS AND/OR DESIGN CALCULATIONS AS REQUIRED BY THE PROJECT OWNER AND/OR COUNTY ENGINEER.
29. EXISTING UTILITY INFORMATION SHOWN HEREON HAS BEEN COLLECTED FROM VARIOUS SOURCES AND IS NOT GUARANTEED AS TO ACCURACY OR COMPLETENESS. THE CONTRACTOR SHALL VERIFY ALL INFORMATION TO HIS SATISFACTION PRIOR TO EXCAVATION. WHERE EXISTING UTILITIES ARE TO BE CROSSED BY PROPOSED CONSTRUCTIONS, TEST PITS SHALL BE DUG BY THE CONTRACTOR PRIOR TO CONSTRUCTION TO ASCERTAIN EXISTING INVERTS, MATERIALS, AND SIZES. TEST PIT INFORMATION SHALL BE GIVEN TO THE ENGINEER PRIOR TO CONSTRUCTION TO PERMIT ADJUSTMENTS AS REQUIRED TO AVOID CONFLICTS. THE CONTRACTOR SHALL NOTIFY THE UNDERSIGNED PROFESSIONAL IMMEDIATELY IF ANY FIELD CONDITIONS ENCOUNTERED DIFFER MATERIALLY FROM THOSE REPRESENTED HEREON. SUCH CONDITIONS COULD RENDER THE DESIGNS HEREON INAPPROPRIATE OR INEFFECTIVE.
30. THE CONTRACTOR IS RESPONSIBLE FOR PROJECT SAFETY, INCLUDING PROVISION OF ALL APPROPRIATE SAFETY DEVICES AND TRAINING REQUIRED.
31. THE MAINTENANCE OF ON-SITE STORMWATER FACILITIES SHALL BE THE RESPONSIBILITY OF THE OWNER. THE MASTER DEED, AND THE DEED TO ANY SUBSEQUENT OWNER, SHALL NOTE THAT THE OWNER SHALL ACCEPT THE MAINTENANCE RESPONSIBILITIES. THE BOROUGH OF HARRISVILLE SHALL BE PERMITTED TO INSPECT THE STORMWATER FACILITIES ON AT LEAST AN ANNUAL SCHEDULE TO ENSURE THAT ANY NECESSARY CORRECTIVE WORK IS PERFORMED IN A TIMELY MANNER.
32. DRAINAGE EASEMENTS, IF ANY, MAY NOT BE ALTERED WITHOUT THE WRITTEN PERMISSION OF THE COUNTY ENGINEER. NO OBSTRUCTIONS SUCH AS PLANTED BERMS OR FENCES MAY BE INSTALLED IN THE DRAINAGE EASEMENT AREAS WITHOUT SUFFICIENT PROVISION FOR THE PASSAGE OF STORMWATER, AND ANY SUCH PROPOSED PROVISION SHALL BE APPROVED IN WRITING BY THE COUNTY ENGINEER.
33. ALL ROADWAYS, CURBS, PARKING LOTS, SANITARY SEWERS, STORM SEWERS, STORMWATER MANAGEMENT DEVICES, AND APPURTENANCES SHALL BE CONSTRUCTED IN ACCORDANCE WITH THE APPROVED PLANS AND TO THE STANDARDS AND SPECIFICATIONS OF BUTLER COUNTY, THE BOROUGH OF HARRISVILLE, AND THE PENNSYLVANIA DEPARTMENT OF TRANSPORTATION.
34. THE DEVELOPER SHALL BE RESPONSIBLE FOR PROVIDING ALL PAVEMENT MARKINGS, STREET SIGNS, TRAFFIC DIRECTIONAL AND CONTROL SIGNS SHOWN ON THIS PLAN IN ACCORDANCE WITH THE BUTLER COUNTY STANDARDS. ALL SIGNAGE SHALL BE CONSISTENT WITH EXISTING SIGNAGE WITHIN THE BOROUGH OF HARRISVILLE.
35. THE BOROUGH OF HARRISVILLE SHALL NOT BE RESPONSIBLE FOR THE MAINTENANCE OF ANY AREA NOT DEDICATED TO THE BOROUGH.
36. THERE SHALL BE NO CHANGES OR DEVIATION FROM THESE PLANS UNLESS APPROVED BY THE ENGINEER. SUCH PLAN CHANGES, SHOULD THEY BECOME NECESSARY, ARE SUBJECT TO BUTLER COUNTY SALDO ORDINANCES.
37. THE CONTRACTOR SHALL NOTIFY ALL APPROPRIATE UTILITIES AT LEAST SEVENTY-TWO (72) HOURS PRIOR TO THE START OF ANY CONSTRUCTION. ALL UTILITIES HAVE BEEN IDENTIFIED BASED ON THE BEST AVAILABLE INFORMATION AND LISTED ON THESE PLANS IN ACCORDANCE WITH ACT 287 REQUIREMENTS. THE CONTRACTOR SHALL VERIFY THE LOCATIONS OF EXISTING UTILITIES AND ALL EFFORTS SHALL BE UNDERTAKEN TO PROTECT EXISTING UTILITIES AND MAINTAIN UNINTERRUPTED SERVICE. ANY DAMAGE TO UTILITIES BY THE CONTRACTOR SHALL BE REPAIRED IMMEDIATELY AT THE CONTRACTOR'S EXPENSE. RESTORATION OF ALL EXISTING SURFACE IMPROVEMENTS DAMAGED OR ALTERED DURING CONSTRUCTION, INCLUDING LANDSCAPING, SHALL ALSO BE THE RESPONSIBILITY OF THE CONTRACTOR.
38. THE CONTRACTOR SHALL MAKE PROVISIONS FOR MAINTAINING THE SAFE FLOW OF TRAFFIC DURING CONSTRUCTION WITHIN THE EXISTING ROAD RIGHTS-OF-WAY WHILE ENTERING AND LEAVING THE SITE.
39. THE CONTRACTOR SHALL BE RESPONSIBLE FOR OBTAINING ANY PERMITS RELATIVE TO THE CONSTRUCTION PROPOSED ON THE PLANS.
40. APPROVAL OF THESE PLANS DOES NOT IN ANY WAY CONSTITUTE A COMMITTMENT OF WASTEWATER COLLECTION, CONVEYANCE, OR TREATMENT CAPACITY.
41. ENGINEERING PERMITS: PRIOR TO ANY WORK WITHIN THE RIGHT OF WAY, PERMITS MUST BE OBTAINED FROM PENNDOT AND/OR THE BOROUGH AS REQUIRED.
42. THIS LAND DEVELOPMENT PLAN WAS PREPARED IN ACCORDANCE WITH REQUIREMENTS ESTABLISHED IN THE SUBDIVISION AND LAND DEVELOPMENT ORDINANCES OF BUTLER COUNTY.
43. ALL CROSSWALKS, STOP BARS, ARROWS, AND "ONLY"S WITHIN THE PUBLIC RIGHT-OF-WAY SHALL BE HOT THERMOPLASTIC. ALL CROSSWALKS SHALL BE PLACED IN A 'PIANO KEY' STYLE.
44. ALL SHEETS INCLUDED IN THIS LAND DEVELOPMENT PLAN SET ARE TO BE CONSIDERED AS IF RECORDED WITH THE RECORD PLAN.
45. THIS SET OF PLANS IS NOT DEPICTING ENVIRONMENTAL CONDITIONS OR A CERTIFICATION/ WARRANTY REGARDING THE PRESENCE OR ABSENCE OF ENVIRONMENTALLY IMPACTED SITE CONDITIONS. MASER CONSULTING HAS PERFORMED NO EXPLORATORY OR TESTING SERVICES, INTERPRETATIONS, CONCLUSIONS, OR OTHER SITE ENVIRONMENTAL SERVICES RELATED TO THE DETERMINATION OF THE POTENTIAL FOR CHEMICAL, TOXIC, RADIOACTIVE, OR OTHER TYPE OF CONTAMINANTS AFFECTING THE PROPERTY AND THE UNDERSIGNED PROFESSIONAL IS NOT QUALIFIED TO DETERMINE THE EXISTENCE OF THE SAME. SHOULD ENVIRONMENTAL CONTAMINATION OR WASTE BE DISCOVERED, THE OWNER AND CONTRACTOR SHALL BE RESPONSIBLE FOR COMPLYING WITH ALL APPLICABLE LAWS AND REGULATIONS.
46. THESE GENERAL NOTES APPLY TO ALL SHEETS IN THE SET.

PLAN BOOK	PAGE
373	22

MASER CONSULTING P.A.
Customer Loyalty through Client Satisfaction
www.maserconsulting.com
Engineers ■ Planners ■ Surveyors
Landscape Architects ■ Environmental Scientists
Office Locations:
■ Red Bank, NJ ■ Clinton, NJ ■ Hamilton, NJ ■ Egg Harbor, NJ ■ Monroe, NJ ■ Mt. Arlington, NJ ■ Mt. Laurel, NJ ■ Albany, NY ■ New Windsor, NY ■ Westchester, NY ■ Charlotte, NC ■ Raleigh, NC
■ Lehigh Valley, PA ■ Exton, PA ■ Philadelphia, PA ■ Pittsburgh, PA ■ Tampa, FL ■ Orlando, FL ■ Miami, FL ■ Jacksonville, FL ■ Sterling, VA ■ Norfolk, VA ■ Albuquerque, NM ■ Columbia, MD

Copyright © 2018. Maser Consulting. All Rights Reserved. This drawing and all the information contained herein is authorized for use only by the party for whom the services were contracted or to whom it is certified. This drawing may not be copied, reused, disclosed, distributed or relied upon for any other purpose without the express written consent of Maser Consulting, P.A.

811 Know what's below. Call before you dig.
PROTECT YOURSELF
ALL STATES REQUIRE NOTIFICATION OF EXCAVATORS, DESIGNERS, OR ANY PERSON PREPARING TO DISTURB THE EARTH'S SURFACE ANYWHERE IN ANY STATE
20181272405
FOR STATE SPECIFIC DIRECT PHONE NUMBERS VISIT: WWW.CALL811.COM

REV	DATE	DRAWN BY	DESCRIPTION
1	7/18/18	MD	REVISED PER COUNTY PLANNING COMMISSION COMMENTS AT 7/18/18 MTG

COMMONWEALTH OF PENNSYLVANIA
REGISTERED
PROFESSIONAL
C. RICHARD ROSEBERRY
ENGINEER
No. 46162

C. RICHARD ROSEBERRY
PENNSYLVANIA REGISTERED PROFESSIONAL ENGINEER - LICENSE NUMBER: PE46162-R

FINAL
LAND DEVELOPMENT
PLAN
FOR
MERCER COUNTY
STATE BANK
PROPOSED BANK
SITE
PARCEL ID 430-S2-A21D-0000
549 SOUTH MAIN STREET
BOROUGH OF HARRISVILLE
BUTLER COUNTY
PENNSYLVANIA

PITTSBURGH OFFICE
North Shore Place II
322 Northshore Drive,
Building 1B, Suite 200
Pittsburgh, PA 15212
Phone: 877.627.3772

SCALE:	DATE:	DRAWN BY:	CHECKED BY:
AS SHOWN	07/10/18	MD	CRR
PROJECT NUMBER: 18001614A		DRAWING NAME: C-CVER	

SHEET TITLE: COVER SHEET

SHEET NUMBER: 1 of 11

LEGAL DESCRIPTION

---------- TEMPORARY USE ONLY ----------

ALL that certain lot, piece or parcel of land situated in the City of Wilkes-Bane, County of Luzerne, and Commonwealth of Pennsylvania bounded and described as follows:

BEGINNING at a point on the northwesterly right-of-way line of Wilkes-Barre Boulevard, said point being the southwesterly corner of Disposition Parcel "N" as shown on survey Map No. A-696, by G.R. Fisher Surveying & Mapping Co., dated February 27, 1986. THENCE along said line of Wilkes-Barre Boulevard, South 58°b0 35' 00" West 275 feet, more or less, to a point on the northeasterly right-of-way line of the proposed Coal Street Extension (as shown on a Preliminary drawing dated November 14, 2001 by the Pennsylvania Department of Transportation). THENCE along said proposed right-of-way line, North 34° 54' 15" West 372 feet, more or less, to a point on the southeasterly right-of-way line of the former Lehigh Valley Railroad. THENCE along said Railroad right-of-way line, North 58°b0 01' 53" East 337 feet, more or less, to a point on the southwesterly line of Parcel 42, as shown on the aforesaid Map No. 696. Said point also being in line of Final Lot
2 as shown on the survey map of Luzerne Optical Laboratories Ltd., Minor Subdivision Final Plan as recorded on December 3rd, 1998 in Luzerne County Map Book 119 at page 62. THENCE along said line, South 31°b0 25' 00" East 225.05 feet to a point on line of the aforesaid Parcel "N".
THENCE along said Parcel "N" by the following two (2) lines:
1. South 58°b0 35' 00" West 40.00 feet.
2. South 31°b0 25' 00" East 150.00 feet to the point of beginning.

EXCEPTING THEREOUT AND THEREFROM from the above all that certain tract of land as described in Record
Book 3010 page 126043 .

Being the same tract of land described in a Title Report provided by Fidelity National Title Insurance Company, Commitment No. MSA-23649, dated July 5, 2018.

SCHEDULE B EXCEPTIONS

Fidelity National Title Insurance Company, .Commitment No. MSA-23649, dated July 5, 2018

8. Declaration of Taking arising out of CP 1972 No. 2475, recorded 12/22/1972 as in Deed Book 1770 page 834 Declaration of Taking arising out of CP 1977 No. 7291, recorded 8/10/1977 as in Deed Book 1930 page 503 - DOCUMENT NOT PROVIDED -

9. Easement as in Deed Book 2186 page 166 and Deed Book 3001 page 134010 - DOCUMENT NOT PROVIDED -

10. Right of Way Agreement (as to telephone facilities) between City of Wilkes-Barre Industrial Development Authority and Jewelcor Inc and Commonwealth Communications Inc, D/B/A Commonwealth Telephone, dated 10/14/1997 and recorded 3/2/1998 as in Record Book 2630 page 700 - DOCUMENT NOT PROVIDED -

11. Easement Agreement (as to light poles) between Seymour Holtzman and Evelyn Holtzman and Eruv of Wyoming Valley Inc., dated 7/27/2005 and recorded 7/29/2005 as in Record Book 3005 page 189141 - DOCUMENT NOT PROVIDED -

12. Declaration of Taking arising out of CP No. 18388 of 2009 (Coal Street Extension), recorded 12/29/2009 as in Record Book 3009 page 254198 . Amendment to Declaration of Taking, recorded 2/12/2010 as in record Book 3010 page 24155 . - DOCUMENT NOT PROVIDED -

13. Temporary Construction Easement Agreement between The City of Wilkes Barre and Seymour Holtzman and Evelyn Holtzman, dated 7/15/2014 and recorded 5/15/2015 as in Record Book 3015 page 84307 . (NOTE: Exhibit A and Exhibit B not attached to instrument) - DOCUMENT NOT PROVIDED -

14. Covenant (Exclusive Use) between Seymour Holtzman and Evelyn Holtzman "Sellers" and Turkey Hill LP "Purchasers", dated 4/27/2015 and recorded 5/15/2015 as in Record Book 3015 page 84327 . - DOCUMENT NOT PROVIDED -

15. Declaration of Access and Utility Easement Agreement between Seymour Holtzman and Evelyn Holtzman "Grantor" and Turkey Hill LP "Grantee", dated 9/30/2014 and recorded 5/15/2015 as in Record Book 3015 page 84331 . - DOCUMENT NOT PROVIDED -

16. Deed of Easement and Right of Way (as to water lines) between Seymour Holtzman and Evelyn Holtzman and Pennsylvania-American Water Company, dated 6/22/2015 and recorded 8/13/2015 as in Record Book 3015 page 148059 - DOCUMENT NOT PROVIDED -

17. Public Utility Right of Way Grant (as to gas pipeline) between Seymour Holtzman and Evelyn Holtzman and UGI Penn Natural Gas Inc., dated 6/22/2015 and recorded 12/11/2015 as in Record Book 3015 page 231086 . - DOCUMENT NOT PROVIDED -

ZONING

The surveyor was not provided with zoning information by the insurer pursuant to Table A item 6 (a)(b.)

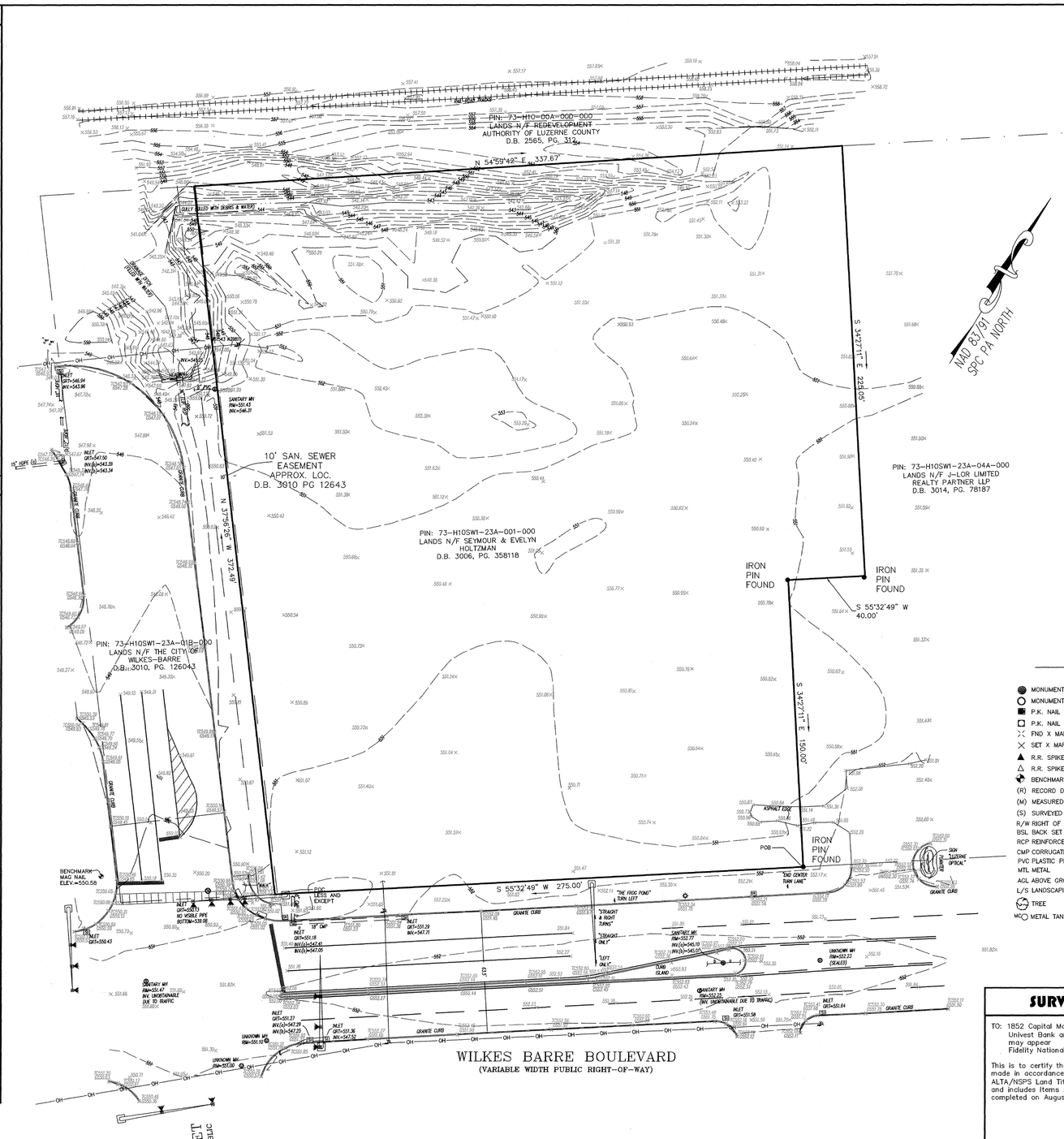

SYMBOLS

- MONUMENT FOUND
- MONUMENT SET
- P.K. NAIL FOUND
- P.K. NAIL SET
- FND X MARK
- SET X MARK
- R.R. SPIKE FOUND
- R.R. SPIKE SET
- BENCHMARK
- (R) RECORD DATA
- (M) MEASURED DATA
- (S) SURVEYED DATA
- R/W RIGHT OF WAY
- BSL BACK SET LINE
- RCP REINFORCED CONC PIPE
- CMP CORRUGATED METAL PIPE
- PVC PLASTIC PIPE
- MTL METAL
- AGL ABOVE GROUND LEVEL
- L/S LANDSCAPING
- TREE
- MC METAL TANK COVER
- POWERPOLE
- GUY WIRE
- LIGHT POLE
- STREET LIGHT POLE
- ELEC. TRANSFORMER
- AIR CONDITIONER
- BURIED ELECTRIC
- OVERHEAD ELECTRIC
- ELEC. MANHOLE
- ELECTRIC METER
- WATER LINE
- WATER MANHOLE
- WATER VALVE
- WATER METER
- HYDRANT
- BACK FLOW PREVENTOR
- GAS VALVE
- GAS METER
- UNDERGROUND GAS MARKER
- GAS MANHOLE
- GAS LINE
- BOLLARD
- BORE HOLE
- MONITORING WELL
- MAIL BOX
- UNKNOWN MANHOLE
- SQUARE METAL LID
- FUEL TANK LID
- FLAG POLE
- SEWER MANHOLE
- CLEAN OUT
- STORM DRAIN MANHOLE
- STORM INLET
- CURB INLET
- PAY PHONE
- TELEPHONE BOX
- TELEPHONE MANHOLE
- TELEPHONE POLE
- TELEPHONE LINE
- UNDERGROUND TELEPHONE MARKER
- CABLE TELEVISION
- CABLE BOX
- UNDERGROUND CABLE MARKER
- TRAFFIC POLES
- TRAFFIC SIGNAL
- TRAFFIC MANHOLE
- TRAFFIC SIGNAL BOX
- STOP SIGN
- SIGN

UTILITY NOTES

ONE CALL SERIAL NUMBER 20182083167 CALL DATE 07/27/2018

UTILITIES SHOWN ARE BASED ON LIMITED DATA. THERE IS NO GUARANTEE AS TO THEIR LOCATION OR SIZE. PLEASE CONTACT RESPECTIVE UTILITY COMPANIES PRIOR TO CONSTRUCTION. POSSIBLE CONTACTS IN THIS AREA ARE:

WILKES BARRE	570 821-1111
PENNSYLVANIA AMERICAN WATER	1800 565-7292
PP&L	1800 342-5775
UGI	800 276-2722
FRONTIER	1 800 921-8101
SERVICE ELECTRIC	570 825-8508
VERIZON	1 800 837-4966

PLAN BOOK	PAGE
373	23

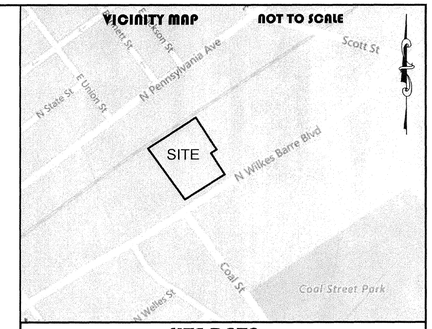

SITE DATA

1. PROPERTY IS KNOWN AS LOT 001 BLOCK 23A IN THE CITY OF WILKES BARRE, LUZERNE COUNTY, PENNSYLVANIA.

2. LOT AREA = 115,877 S.F. OR 2.6602 AC.

3. NO CHANGES IN STREET RIGHT OF WAY LINES EITHER COMPLETED OR PROPOSED KNOWN TO THIS SURVEYOR. NO OBSERVABLE EVIDENCE OF RECENT STREET OR SIDEWALK CONSTRUCTION OR REPAIRS.

4. VERTICAL DATUM = NAVD 88 . BENCHMARK MAG NAIL ELEV.= 550.58

5. LOCATION OF ALL UNDERGROUND UTILITIES ARE APPROXIMATE. ALL LOCATIONS AND SIZES ARE BASED ON UTILITY MARK-OUTS, ABOVE GROUND STRUCTURES THAT WERE VISIBLE & ACCESSIBLE IN THE FIELD, AND THE MAPS LISTED IN THE REFERENCES AVAILABLE AT THE TIME OF THE SURVEY. AVAILABLE AS-BUILT PLANS AND UTILITY MARK-OUT DOES NOT ENSURE MAPPING OF ALL UNDERGROUND UTILITIES AND STRUCTURES. BEFORE ANY EXCAVATION IS TO BEGIN, ALL UNDERGROUND UTILITIES SHOULD BE VERIFIED AS TO THEIR LOCATION, SIZE AND TYPE BY THE PROPER UTILITY COMPANIES.

6. THE EXISTENCE OF UNDERGROUND STORAGE TANKS, IF ANY, WAS NOT KNOWN AT THE TIME OF THIS SURVEY.

7. TOPOGRAPHIC INFORMATION SHOWN HEREON TAKEN FROM GROUND SURVEY PERFORMED BY FIRST ORDER, LLC. DATE OF FIELD SURVEY = AUGUST 9, 2018

8. THIS PLAN IS VALID ONLY WHEN SIGNED IN COLORED INK AND EMBOSSED WITH A RAISED IMPRESSION SEAL AND WAS PREPARED IN ACCORDANCE WITH THE MINIMUM STANDARD OF ACCURACY OF THE STATE IN WHICH THE PROJECT IS LOCATED.

9. THE WORD "CERTIFY" OR "CERTIFICATE" AS SHOWN AND USED HEREON MEANS AN EXPRESSION OF PROFESSIONAL OPINION REGARDING THE FACTS OF THIS SURVEY AND DOES NOT CONSTITUTE A WARRANTY OR GUARANTEE, EXPRESSED OR IMPLIED.

10. COPYRIGHT ©2018, FIRST ORDER, LLC. ALL RIGHTS RESERVED. NO PART OF THIS DRAWING MAY BE REPRODUCED BY PHOTOCOPYING, RECORDING OR BY ANY OTHER MEANS, OR STORED, PROCESSED, OR TRANSMITTED IN OR BY ANY COMPUTER OR OTHER SYSTEMS WITHOUT THE PRIOR WRITTEN PERMISSION OF THE SURVEYOR. COPIES OF THIS PLAN WITHOUT A RAISED IMPRESSION SEAL ARE NOT VALID.

11. THE SURVEYOR WAS NOT PROVIDED WITH ZONING INFORMATION BY THE CLIENT PURSUANT TO TABLE A ITEM 6 (A)(B).

12. PARKING PROVIDED –
NO STRIPING OBSERVED AT TIME OF SURVEY
TOTAL SPACES PROVIDED = 0

FLOOD NOTE

BY GRAPHICAL REPRESENTATION ONLY THIS PROPERTY IS LOCATED IN FLOOD HAZARD ZONE X SHADED AND "PROTECTED FROM THE 1 PERCENT ANNUAL CANCE OF GREATER FLOOD HAZARD BY A LEVEE SYSTEM THAT AS BEEN PROVISIONALLY ACCREDITED." AS SHOWN ON FLOOD INSURANCE RATE MAP, COMMUNITY PANEL No. WHICH HAS AN EFFECTIVE DATE OF NOVEMBER 2 2012 AND IS NOT IN A SPECIAL FLOOD HAZARD AREA. FIELD SURVEYING WAS NOT PERFORMED TO DETERMINE THIS ZONE. AN ELEVATION CERTIFICATE MAY BE NEEDED TO VERIFY THIS DETERMINATION OR APPLY FOR AN AMENDMENT FROM THE FEDERAL EMERGENCY MANAGEMENT AGENCY

SURVEYOR'S CERTIFICATION

TO: 1852 Capital Management, LLC
Univest Bank and Trust Co., its successors and/or assigns as their interests may appear
Fidelity National Title Insurance Company

This is to certify that this map or plat and the survey on which it is based were made in accordance with the 2016 Minimum Standard Detail Requirements for ALTA/NSPS Land Title Surveys, jointly established and adopted by ALTA and NSPS, and includes Items 2, 3, 4, 5, 8, 9, 11 & 13 of Table A thereof. The field work was completed on August 09, 2018.

[Surveyor's Signature]
Gregory C. Noll
Professional Land Surveyor SU075048
In the Commonwealth of Pennsylvania
Date of Survey: August 13, 2018
Date of Last Revision: August 13, 2018
Network Project No. 18004216A

Survey Performed By:
First Order, LLC
4383 Hecktown Road, Suite B
Bethlehem, PA 18020
Phone 610-365-2907
Fax 610-365-2958
Email: jshoemaker@firstorderllc.net
Project No. V18-0042

THIS CERTIFICATION IS MADE TO ONLY NAMED PARTIES FOR PURCHASE AND/OR MORTGAGE OF HEREIN DELINEATED PROPERTY BY THE NAMED PURCHASER. NO RESPONSIBILITY OR LIABILITY IS ASSUMED BY SURVEYOR FOR THE USE OF SURVEY FOR ANY OTHER PURPOSE INCLUDING, BUT NOT LIMITED TO, USE OF SURVEY AFFIDAVIT, RESALE OF PROPERTY, OR TO ANY OTHER PERSON NOT LISTED IN CERTIFICATION, EITHER DIRECTLY OR INDIRECTLY.

Preliminary

VALLEY LAND SERVICES, LLC
4383 HECKTOWN ROAD
BETHLEHEM, PA 18020
Phone (610) 365-2907
Fax (610) 365-2958

TYPE OF SURVEY: ALTA / NSPS SURVEY

SITE ADDRESS: 150 N WILKES BARRE BOULEVARD
CITY OF WILKES BARRE
LUZERNE COUNTY, PENNSYLVANIA

CLIENT: MASER
#18004216A

JOB NO: V18-0042

DATE: AUGUST 13 2018
REVISIONS:

No.	DATE	DESCRIPTION

0' 30' 60' 90'
SCALE: 1" = 30'

SHEET 1 OF 1

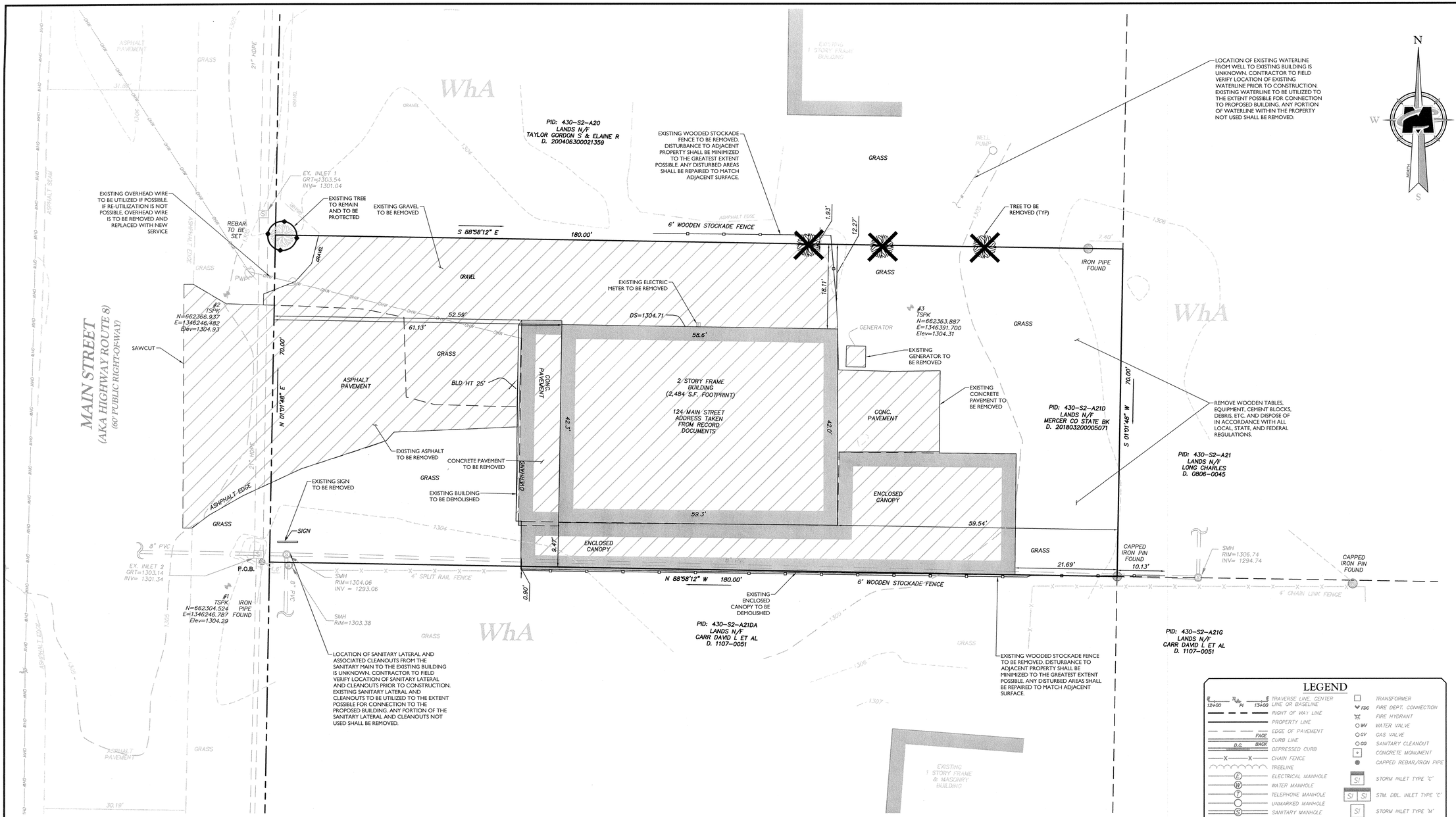

DEMOLITION NOTES:

1. ALL DEMOLITION ACTIVITIES ARE TO BE PERFORMED IN STRICT ADHERENCE TO ALL FEDERAL STATE AND LOCAL REGULATIONS.
2. CONDUCT DEMOLITION SERVICES IN SUCH A MANNER TO INSURE MINIMUM INTERFERENCE WITH ROADS, STREETS, WALKS AND OTHER ADJACENT FACILITIES. DO NOT CLOSE OR OBSTRUCT STREETS, WALKS OR OTHER OCCUPIED FACILITIES WITHOUT PRIOR WRITTEN PERMISSION OF OWNER AND ANY APPLICABLE GOVERNMENTAL AUTHORITIES. PROVIDE ALTERNATE ROUTES AROUND CLOSED OR OBSTRUCTED TRAFFIC WAYS, IF REQUIRED BY APPLICABLE GOVERNMENTAL REGULATIONS.
3. USE WATERING, TEMPORARY ENCLOSURES AND OTHER SUITABLE METHODS, AS NECESSARY TO LIMIT THE AMOUNT OF DUST AND DIRT RISING AND SCATTERING IN THE AIR. CLEAN ADJACENT STRUCTURES AND IMPROVEMENTS OF ALL DUST AND DEBRIS CAUSED BY THE DEMOLITION OPERATIONS. RETURN ALL ADJACENT AREAS TO THE CONDITIONS EXISTING PRIOR TO THE START OF WORK.
4. ACCOMPLISH AND PERFORM THE DEMOLITION IN SUCH A MANNER AS TO PREVENT THE UNAUTHORIZED ENTRY OF PERSONS AT ANY TIME.
5. COMPLETELY FILL BELOW GRADE AREAS AND VOIDS RESULTING FROM THE DEMOLITION OF STRUCTURES AND FOUNDATIONS WITH SOIL MATERIALS CONSISTING OF STONE, GRAVEL AND SAND, FREE FROM DEBRIS, TRASH, FROZEN MATERIALS, ROOTS AND OTHER ORGANIC MATTER. STONES USED WILL NOT BE LARGER THAN 6 INCHES IN DIMENSION. MATERIAL FROM DEMOLITION MAY NOT BE USED AS FILL. PRIOR TO PLACEMENT OF FILL MATERIALS, UNDERTAKE ALL NECESSARY ACTION IN ORDER TO INSURE THAT AREAS TO BE FILLED ARE FREE OF STANDING WATER, FROST, FROZEN MATERIAL, TRASH, DEBRIS. PLACE FILL MATERIALS IN HORIZONTAL LAYERS NOT EXCEEDING 6 INCHES IN LOOSE DEPTH AND COMPACT EACH LAYER AT PLACEMENT TO 95% OPTIMUM DENSITY. GRADE THE SURFACE TO MEET ADJACENT CONTOURS AND TO PROVIDE SURFACE DRAINAGE.
6. REMOVE FROM THE DESIGNATED SITE, AT THE EARLIEST POSSIBLE TIME, ALL DEBRIS, RUBBISH, SALVAGEABLE ITEMS, HAZARDOUS AND COMBUSTIBLE SERVICES. REMOVED MATERIALS MAY NOT BE STORED, SOLD OR BURNED ON THE SITE. REMOVAL OF HAZARDOUS AND COMBUSTIBLE MATERIALS SHALL BE ACCOMPLISHED IN ACCORDANCE WITH THE PROCEDURES AS AUTHORIZED BY THE FIRE DEPARTMENT OR OTHER APPROPRIATE REGULATORY AGENCIES AND AUTHORITIES.
7. BEFORE THE COMMENCEMENT OF THE DESIGNATED DEMOLITION, MARK FOR POSITION ALL UTILITIES AND PROTECT ALL ACTIVE LINES. CLEARLY IDENTIFY BEFORE THE COMMENCEMENT OF DEMOLITION SERVICES THE REQUIRED INTERRUPTION OF ACTIVE SYSTEMS THAT MAY AFFECT OTHER PARTIES, AND NOTIFY ALL APPLICABLE UTILITY COMPANIES TO INSURE THE CONTINUATION OF SERVICE.
8. THIS DEMOLITION PLAN IS INTENDED TO IDENTIFY THOSE EXISTING CONDITIONS WHICH ARE TO BE REMOVED. IT IS NOT INTENDED TO PROVIDE DIRECTION OTHER THAN THAT ALL PROCEDURES ARE TO BE IN ACCORDANCE WITH STATE, FEDERAL, LOCAL AND JURISDICTIONAL REQUIREMENTS. THE CONTRACTOR SHALL BE RESPONSIBLE FOR ALL SAFETY PRECAUTIONS NECESSARY.

DEMO LEGEND

EXISTING FEATURE TO BE REMOVED

TREE TO BE REMOVED

SOILS SCHEDULE					
TAKEN FROM USDA NATURAL RESOURCE CONSERVATION SERVICE(NRCS)					
MAP SYMBOL	SOIL	HYDROLOGIC SOILS GROUP	DEPTH TO BEDROCK (FT. BELOW GRADE)	DEPTH TO SEASONAL WATER TABLE (FT. BELOW GRADE)	FLOOD HAZARD POTENTIAL
WhA	WHEELING SILT LOAM, 0 TO 3% SLOPES	B	> 6.67	> 6.67	N/A

SCALE : 1" = 10'

PLAN BOOK	PAGE
373	24

LEGEND

- TRAVERSE LINE, CENTER LINE OR BASELINE (124-00 TL PI 134-00)
- RIGHT OF WAY LINE
- PROPERTY LINE
- EDGE OF PAVEMENT (FACE)
- CURB LINE (BACK)
- DEPRESSED CURB (D.C.)
- CHAIN FENCE
- TREELINE
- ELECTRICAL MANHOLE (E)
- WATER MANHOLE (W)
- TELEPHONE MANHOLE (T)
- UNMARKED MANHOLE
- SANITARY MANHOLE (S)
- DRAINAGE MANHOLE (D)
- MAJOR CONTOUR (75)
- MINOR CONTOUR (74)
- SPOT ELEVATION (G 29.0)
- TOP OF CURB ELEV. (TC 29.0)
- BOTTOM OF CURB ELEV. (BC 29.0)
- OVERHEAD WIRE (OHW)
- WATER LINE (W)
- SAN. SEWER
- STORM PIPE
- TREE
- ROADWAY SIGNS
- TRAFFIC FLOW
- MAILBOX
- TRAFFIC SIGNAL POLE
- POLE MOUNTED LIGHT
- UTILITY POLE
- GUY WIRE
- TRANSFORMER
- FDC FIRE DEPT. CONNECTION
- FIRE HYDRANT
- WV WATER VALVE
- GV GAS VALVE
- CO SANITARY CLEANOUT
- CONCRETE MONUMENT
- CAPPED REBAR/IRON PIPE
- SI STORM INLET TYPE "C"
- SI SI STM. DBL. INLET TYPE "C"
- SI STORM INLET TYPE "M"
- SI SI STM. DBL. INLET TYPE "M"
- FLARED END SECTION
- HEADWALL
- TREE PROTECTION FENCE

ABBREVIATIONS

D.C. = DEPRESSED CURB	FF = FINISH FLOOR	MHWL = MEAN HIGH WATERLINE
BC = BOTTOM OF CURB	UW = UNKNOWN VALVE	
TC = TOP OF CURB	MH = MANHOLE	MLWL= MEAN LOW WATERLINE
BOL = BOLLARD	DEP. = DEPRESSED	
GRT = GRATE	CL = CENTERLINE	TW = TOP OF WALL
MB = MAILBOX	PM = PARKING METER	BW = BOTTOM WALL

MASER CONSULTING P.A.
Customer Loyalty through Client Satisfaction
www.maserconsulting.com
Engineers ■ Planners ■ Surveyors
Landscape Architects ■ Environmental Scientists
Office Locations:
■ Red Bank, NJ ■ Clinton, NJ ■ Hamilton, NJ ■ Egg Harbor, NJ ■ Montvale, NJ ■ Mt. Arlington, NJ ■ Mt. Laurel, NJ ■ Albany, NY ■ New Windsor, NY ■ Westchester, NY ■ Charlotte, NC ■ Raleigh, NC ■ Lehigh Valley, PA ■ Exton, PA ■ Philadelphia, PA ■ Pittsburgh, PA ■ Tampa, FL ■ Orlando, FL ■ Miami, FL ■ Jacksonville, FL ■ Sterling, VA ■ Norfolk, VA ■ Albuquerque, NM ■ Columbia, MD

Copyright © 2018. Maser Consulting. All Rights Reserved. This drawing and all the information contained herein is authorized for use only by the party for whom the services were contracted or to whom it is certified. This drawing may not be copied, reused, disclosed, distributed or relied upon for any other purpose without the express written consent of Maser Consulting, P.A.

811 PROTECT YOURSELF
ALL STATES REQUIRE NOTIFICATION OF EXCAVATORS, DESIGNERS, OR ANY PERSON PREPARING TO DISTURB THE EARTH'S SURFACE ANYWHERE IN ANY STATE
Know what's below. Call before you dig. 20181273405
FOR STATE SPECIFIC DIRECT PHONE NUMBERS VISIT: WWW.CALL811.COM

REV	DATE	DRAWN BY	DESCRIPTION
1	7/18/18	MD	REVISED PER COUNTY PLANNING COMMISSION COMMENTS AT 7/18/18 PTG

COMMONWEALTH OF PENNSYLVANIA
REGISTERED PROFESSIONAL
C. RICHARD ROSEBERRY
ENGINEER
No. 46162

C. RICHARD ROSEBERRY
PENNSYLVANIA REGISTERED PROFESSIONAL ENGINEER - LICENSE NUMBER: PE46162-R

FINAL
LAND DEVELOPMENT PLAN
FOR
MERCER COUNTY STATE BANK
PROPOSED BANK SITE
PARCEL ID 430-S2-A21D-0000
549 SOUTH MAIN STREET
BOROUGH OF HARRISVILLE
BUTLER COUNTY
PENNSYLVANIA

PITTSBURGH OFFICE
North Shore Place II
322 Northshore Drive,
Building 1B, Suite 200
Pittsburgh, PA 15212
Phone: 877.627.3772

SCALE:	DATE:	DRAWN BY:	CHECKED BY:
AS SHOWN	07/10/18	MD	CRR
PROJECT NUMBER:	DRAWING NAME:		
18001614A	C-DEMO		

SHEET TITLE:
SITE DEMOLITION PLAN

SHEET NUMBER:
2 of 11

2018\18001614A\Engineering\Dwg Plots\C-DEMO.dwg 07-10-18 By: MDEBOR

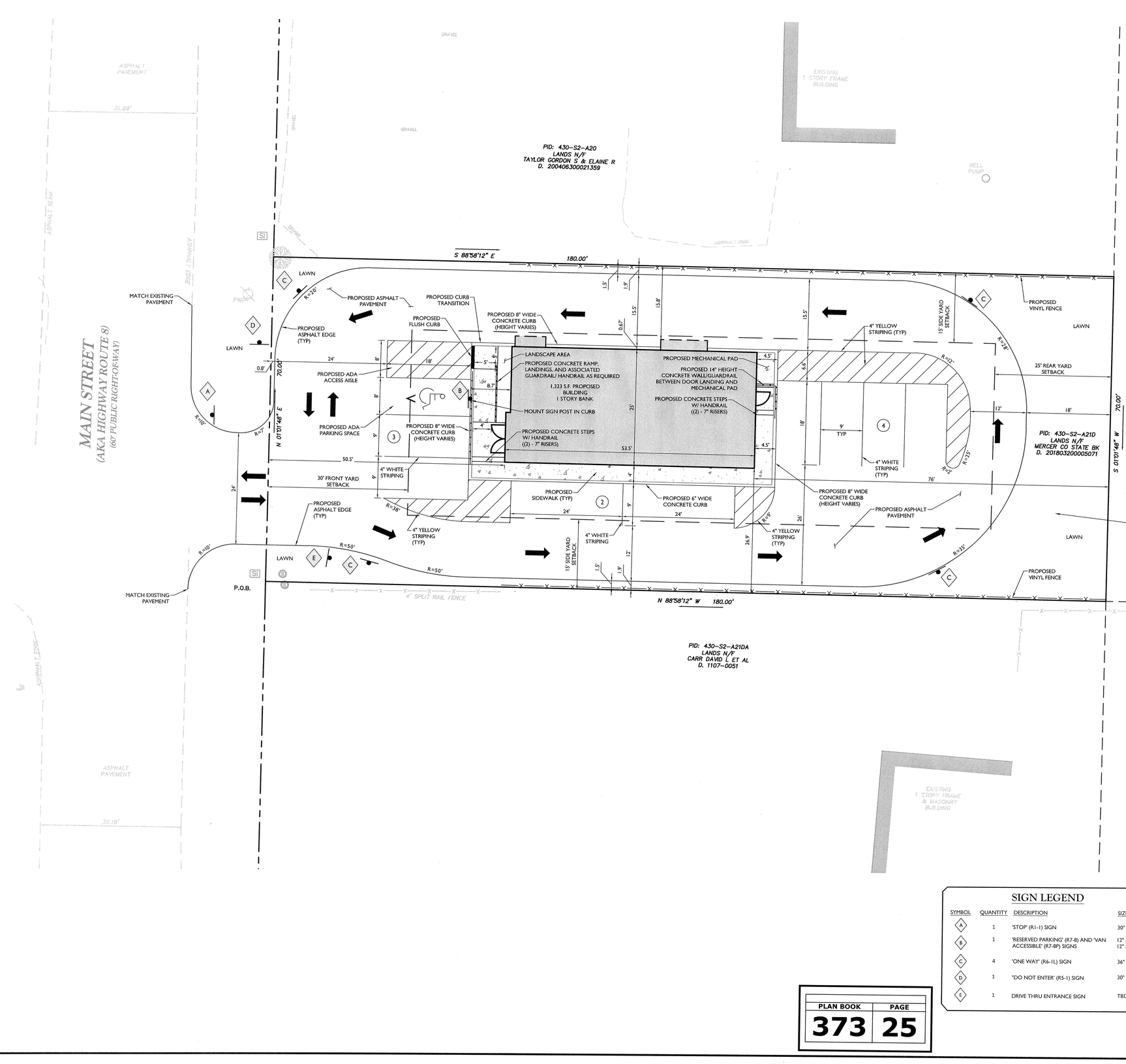

SIGN LEGEND

SYMBOL	QUANTITY	DESCRIPTION	SIZE (IN)
A	1	'STOP' (R1-1) SIGN	30" X 30"
B	1	'RESERVED PARKING' (R7-8) AND 'VAN ACCESSIBLE' (R7-8P) SIGNS	12" X 18" 12" X 6"
C	4	'ONE WAY' (R6-1L) SIGN	36" X 12"
D	1	"DO NOT ENTER' (R5-1) SIGN	30" X 30"
E	1	DRIVE THRU ENTRANCE SIGN	TBD

LEGEND

EXISTING		PROPOSED
	TRAVERSE LINE, CENTER LINE OR BASELINE (LABEL AS SUCH)	12+00 13+00
	RIGHT OF WAY LINE	
	PROPERTY LINE	
	EDGE OF PAVEMENT	
FACE BACK	CURB	FACE BACK
	DEPRESSED CURB	
	SIDEWALK	
	FENCES	
	TREELINE	
	ROADWAY SIGNS	
	STALL COUNT	10
	ADA ACCESSIBLE STALL	
	DEPRESSED CURB AND ADA RAMP	HC
	DIRECTION OF TRAFFIC FLOW	

PLAN BOOK	PAGE
373	25

10 0 10 20

SCALE : 1" = 10'

MASER CONSULTING P.A.
Customer Loyalty through Client Satisfaction
www.maserconsulting.com
Engineers ■ Planners ■ Surveyors
Landscape Architects ■ Environmental Scientists
Office Locations:
■ Red Bank, NJ ■ Clinton, NJ ■ Hamilton, NJ ■ Egg Harbor, NJ ■ Montvale, NJ ■ Mt. Arlington, NJ ■ Mt. Laurel, NJ ■ Albany, NY ■ New Windsor, NY ■ Westchester, NY ■ Charlotte, NC ■ Raleigh, NC
■ Lehigh Valley, PA ■ Exton, PA ■ Philadelphia, PA ■ Pittsburgh, PA ■ Tampa, FL ■ Orlando, FL ■ Miami, FL ■ Jacksonville, FL ■ Sterling, VA ■ Norfolk, VA ■ Albuquerque, NM ■ Columbia, MD

Copyright © 2018, Maser Consulting. All Rights Reserved. This drawing and all the information contained herein is authorized for use only by the party for whom the services were contracted or to whom it is certified. This drawing may not be copied, reused, disclosed, distributed or relied upon for any other purpose without the express written consent of Maser Consulting, P.A.

PROTECT YOURSELF
ALL STATES REQUIRE NOTIFICATION OF EXCAVATORS, DESIGNERS, OR ANY PERSON PREPARING TO DISTURB THE EARTH'S SURFACE ANYWHERE IN ANY STATE
Know what's below. Call before you dig. 20181273405
FOR STATE SPECIFIC DIRECT PHONE NUMBERS VISIT: WWW.CALL811.COM

REV.	DATE	DRAWN BY	DESCRIPTION
1	7/18/18	MD	REVISED PER COUNTY PLANNING COMMISSION COMMENTS AT 7/18/18 MTG

COMMONWEALTH OF PENNSYLVANIA REGISTERED PROFESSIONAL
C. RICHARD ROSEBERRY
ENGINEER No. 46162

C. RICHARD ROSEBERRY
PENNSYLVANIA REGISTERED PROFESSIONAL ENGINEER - LICENSE NUMBER: PE46162-R

FINAL LAND DEVELOPMENT PLAN

FOR

MERCER COUNTY STATE BANK PROPOSED BANK SITE

PARCEL ID 430-S2-A21D-0000

549 SOUTH MAIN STREET

BOROUGH OF HARRISVILLE
BUTLER COUNTY
PENNSYLVANIA

PITTSBURGH OFFICE
North Shore Place II
322 Northshore Drive, Building 1B, Suite 200
Pittsburgh, PA 15212
Phone: 877.627.3772

SCALE:	DATE:	DRAWN BY:	CHECKED BY:
AS SHOWN	07/10/18	MD	CRR

PROJECT NUMBER:	DRAWING NAME:
18001614A	C-LAYT

SHEET TITLE:
DIMENSION PLAN

SHEET NUMBER:
3 of 11

2018\18001614A\Engineering\Site Plan\C-LAYT.dwg C-0 LAYOUT By: MDEBUS

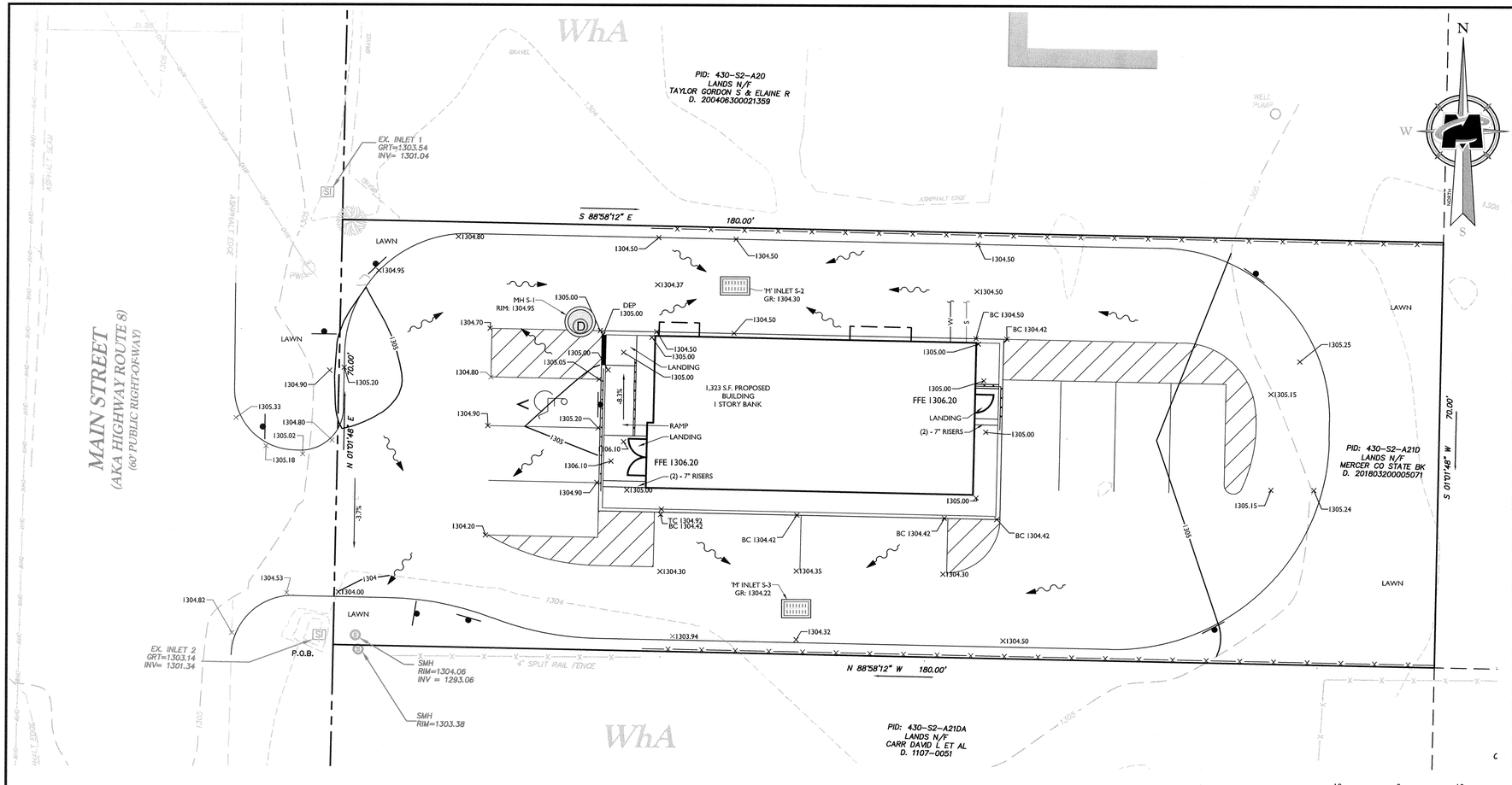

ADA INSTRUCTIONS TO CONTRACTOR:

1. CONTRACTOR SHALL EXERCISE APPROPRIATE CARE AND PRECISION IN CONSTRUCTION OF ADA (HANDICAPPED) ACCESSIBLE COMPONENTS FOR THE SITE. THESE COMPONENTS, AS CONSTRUCTED, MUST COMPLY WITH THE LATEST ADA STANDARDS FOR ACCESSIBLE DESIGN. FINISHED SURFACES ALONG THE ACCESSIBLE ROUTE OF TRAVEL FROM PARKING SPACE, PUBLIC TRANSPORTATION, PEDESTRIAN ACCESS, INTER-BUILDING ACCESS, TO POINTS OF ACCESSIBLE BUILDING ENTRANCE/EGRESS, SHALL COMPLY WITH THESE ADA CODE REQUIREMENTS. THESE INCLUDE, BUT ARE NOT LIMITED TO THE FOLLOWING:

   (NOTE: THIS LIST IS NOT INTENDED TO CAPTURE EVERY APPLICABLE FEDERAL, STATE AND LOCAL RULE AND REGULATION. THE CONTRACTOR IS RESPONSIBLE FOR COMPLIANCE WITH THE LAW, WHETHER OR NOT STATED SPECIFICALLY HEREIN):

   A. PARKING SPACES AND PARKING AISLES - SLOPE SHALL NOT EXCEED 1:48 (l/4" PER FOOT OR NOMINALLY 2.0%) IN ANY DIRECTION.

   B. CURB RAMPS- SLOPES SHALL NOT EXCEED 1:12 (8.3%).

   C. LANDINGS -SHALL BE PROVIDED AT EACH END OF RAMPS. SHALL PROVIDE POSITIVE DRAINAGE. AND SHALL NOT EXCEED 1:48 (1/4" PER FOOT OR NOMINALLY 2.0%) IN ANY DIRECTION.

   D. PATH OF TRAVEL ALONG ACCESSIBLE ROUTE - SHALL PROVIDE A 36 INCH OR GREATER UNOBSTRUCTED WIDTH OF TRAVEL. (CAR OVERHANGS CANNOT REDUCE THIS MINIMUM WIDTH). THE SLOPE SHALL BE NO GREATER THAN 1 :20 (5.0%) IN THE DIRECTION OF TRAVEL, AND SHALL NOT EXCEED 1:48 (1/4" PER FOOT OR NOMINALLY 2.0%) IN CROSS SLOPE.

   E. WHERE PATH OF TRAVEL WILL BE GREATER THAN 1:20 (5.0%), AN ADA RAMP WITH A MAXIMUM SLOPE OF 1:12 (8.3%), FOR A MAXIMUM DISTANCE OF 30 FEET, SHALL BE PROVIDED, THE RAMP SHALL HAVE ADA HAND RAILS AND "LEVEL" LANDINGS ON EACH END THAT ARE SLOPED NO MORE THAN 1:48 (l/4" PER FOOT OR NORMALLY 2.0%) FOR POSITIVE DRAINAGE.

   F. DOORWAYS - SHALL HAVE A "LEVEL" LANDING AREA ON THE EXTERIOR SIDE OF THE DOOR THAT IS SLOPED NO MORE THAN 1:48 (1/4" PER FOOT OR NORMALLY 2.0%) FOR POSITIVE DRAINAGE. THIS LANDING AREA SHALL BE NO LESS THAN 60 INCHES (5 FEET) LONG, EXCEPT WHERE OTHER WISE PERMITTED BY ADA STANDARDS FOR ALTERNATIVE DOORWAY OPENING CONDITIONS (SEE APPLICABLE CODE SECTIONS).

2. IT IS RECOMMENDED THAT THE CONTRACTOR REVIEW THE INTENDED CONSTRUCTION WITH THE LOCAL BUILDING CODE OFFICIAL PRIOR TO COMMENCING WORK.

3. A DETAILED DRAWING OF THE PROPOSED ADA RAMPS MUST BE SUBMITTED FOR REVIEW PRIOR TO CONSTRUCTION.

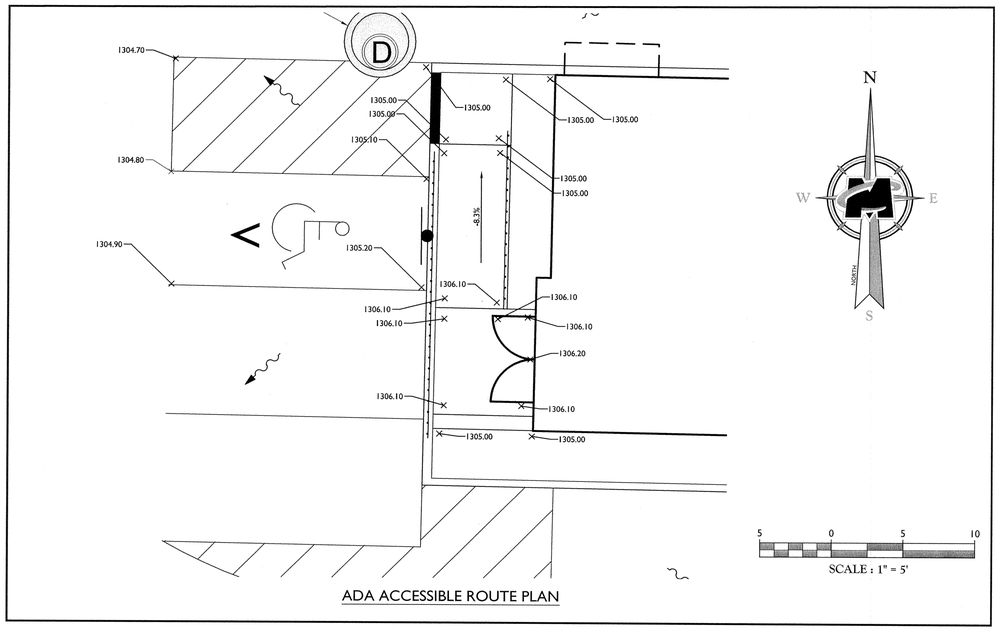

ADA ACCESSIBLE ROUTE PLAN

PLAN BOOK	PAGE
373	26

LEGEND

EXISTING		PROPOSED
12+00 PI 13+00	TRAVERSE LINE, CENTER LINE OR BASELINE (LABEL AS SUCH)	12+00 13+00
	RIGHT OF WAY LINE	
	PROPERTY LINE	
	EDGE OF PAVEMENT	
FACE / BACK	CURB	FACE / BACK
	DEPRESSED CURB	
	SIDEWALK	
X X	FENCES	X X
	TREELINE	
	ROADWAY SIGNS	
	WETLAND LINE	
	MUNICIPAL BOUNDARY LINE	
	'C' INLET	
	'M' INLET	
D	STORM MANHOLE	D
S	SANITARY MANHOLE	S
	FLARED END SECTION	
	HEADWALL	
	HYDRANT	
	POLE MOUNTED LIGHT	
75 / 74	CONTOURS	75 / 74
× G 29.0	SPOT ELEVATION	× G 29.0
	DIRECTION OF OVERLAND FLOW	
× TC 28.0	TOP OF CURB ELEVATION	× TC 29.0
× BC 28.0	BOTTOM OF CURB ELEVATION	× BC 29.0
	TOP OF DEPRESSED CURB ELEVATION	× TDC 29.0

MASER CONSULTING P.A.
Customer Loyalty through Client Satisfaction
www.maserconsulting.com
Engineers ■ Planners ■ Surveyors
Landscape Architects ■ Environmental Scientists
Office Locations:
■ Red Bank, NJ ■ Clinton, NJ ■ Hamilton, NJ ■ Egg Harbor, NJ ■ Montvale, NJ ■ Mt. Arlington, NJ ■ Mt. Laurel, NJ ■ Albany, NY ■ New Windsor, NY ■ Westchester, NY ■ Charlotte, NC ■ Raleigh, NC ■ Lehigh Valley, PA ■ Exton, PA ■ Philadelphia, PA ■ Pittsburgh, PA ■ Tampa, FL ■ Orlando, FL ■ Miami, FL ■ Jacksonville, FL ■ Sterling, VA ■ Norfolk, VA ■ Albuquerque, NM ■ Columbia, MD

Copyright © 2018. Maser Consulting. All Rights Reserved. This drawing and all the information contained herein is authorized for use only by the party for whom the services were contracted or to whom it is certified. This drawing may not be copied, reused, disclosed, distributed or relied upon for any other purpose without the express written consent of Maser Consulting, P.A.

PROTECT YOURSELF
ALL STATES REQUIRE NOTIFICATION OF EXCAVATORS, DESIGNERS, OR ANY PERSON PREPARING TO DISTURB THE EARTH'S SURFACE ANYWHERE IN ANY STATE
Know what's below. Call before you dig. 20181273405
FOR STATE SPECIFIC DIRECT PHONE NUMBERS VISIT: WWW.CALL811.COM

REV	DATE	DRAWN BY	DESCRIPTION
1	7/18/18	MD	REVISED PER COUNTY PLANNING COMMISSION COMMENTS AT 7/18/18 MTG

COMMONWEALTH OF PENNSYLVANIA
REGISTERED PROFESSIONAL
C. RICHARD ROSEBERRY
ENGINEER No. 46162

C. RICHARD ROSEBERRY
PENNSYLVANIA REGISTERED PROFESSIONAL ENGINEER - LICENSE NUMBER: PE46162-R

FINAL LAND DEVELOPMENT PLAN

FOR

MERCER COUNTY STATE BANK PROPOSED BANK SITE

PARCEL ID 430-S2-A21D-0000

549 SOUTH MAIN STREET

BOROUGH OF HARRISVILLE
BUTLER COUNTY
PENNSYLVANIA

PITTSBURGH OFFICE
North Shore Place II
322 Northshore Drive,
Building 1B, Suite 200
Pittsburgh, PA 15212
Phone: 877.627.3772

SCALE:	DATE:	DRAWN BY:	CHECKED BY:
AS SHOWN	07/10/18	MD	CRR
PROJECT NUMBER: 18001614A	DRAWING NAME: C-GRAD		

SHEET TITLE: GRADING PLAN

SHEET NUMBER: 4 of 11

2018 I 8001614 I A I Engineering\Site Plans\C-GRAD.dwg\C-04-GRADING By: JCHOWALLADER

MAIN STREET
(AKA HIGHWAY ROUTE 8)
(60' PUBLIC RIGHT-OF-WAY)

PID: 430-S2-A20
LANDS N/F
TAYLOR GORDON S & ELAINE R
D. 200406300021359

EXISTING 1 STORY FRAME BUILDING

EX. INLET 1
GRT=1303.54
INV= 1301.04

'M' INLET S-2
GR: 1304.30
INV.(OUT): 1301.80 (P-2)

ROUTING OF PROPOSED WATER AND SANITARY UTILITIES TO BE DETERMINED IN FIELD UPON INSPECTION AND VERIFICATION OF THE CONDITION OF THE EXISTING WATER AND SANITARY PIPES.

LOCATION OF EXISTING WATERLINE FROM WELL TO EXISTING BUILDING IS UNKNOWN. CONTRACTOR TO FIELD VERIFY LOCATION OF EXISTING WATERLINE PRIOR TO CONSTRUCTION. EXISTING WATERLINE TO BE UTILIZED TO THE EXTENT POSSIBLE FOR CONNECTION TO PROPOSED BUILDING. ANY PORTION OF WATERLINE WITHIN THE PROPERTY NOT USED SHALL BE REMOVED. NEW WATERLINE TO BE INSTALLED AS REQUIRED TO PROVIDE WATER SERVICE FROM THE EXISTING WELL TO THE PROPOSED BUILDING. MATERIAL AND SIZE TO MATCH EXISTING AND TO CONFORM WITH ALL LOCAL, STATE, AND FEDERAL REGULATIONS AS APPLICABLE.

WELL PUMP

S 88°58'12" E 180.00'

CONTRACTOR TO COORDINATE WITH LOCAL UTILITY COMPANY FOR INSTALLATION OF PROPOSED POLE MOUNTED TRANSFORMER

MH S-1
RIM: 1304.95
INV.(IN): 1301.67 (P-2)
INV.(OUT): 1301.67 (P-1)

26 L.F. 15" HDPE @ 0.50% (P-2)

EXISTING OVERHEAD WIRE TO BE UTILIZED IF POSSIBLE. IF RE-UTILIZATION IS NOT POSSIBLE, INSTALL PROPOSED OVERHEAD WIRE

PROPOSED MECHANICAL ROOM/ MECHANICAL PAD. REFER TO MEP PLANS FOR UTILITY CONNECTIONS TO BUILDING

1,323 S.F. PROPOSED BUILDING
1 STORY BANK

LANDING
RAMP
LANDING
(2) - 7" RISERS
LANDING
(2) - 7" RISERS

N 01°01'48" E 70.00'

S 01°01'48" W 70.00'

PID: 430-S2-A21D
LANDS N/F
MERCER CO STATE BK
D. 201803200005071

PID: 430-S2-A21
LANDS N/F
LONG CHARLES
D. 0806-0045

66 L.F. 15" HDPE @ 0.50% (P-1)

PROPOSED STORM PIPES TO CONNECT TO EX. INLET 2

IF PROPOSED ROUTING OF PIPE P-3 CONFLICTS WITH EXISTING SANITARY SYSTEM, CONTRACTOR TO PROVIDE PRICING FOR A 48" MANHOLE TO BE INSTALLED ALONG STORM PIPE P-1. STORM PIPE P-3 TO BE REALIGNED TO CONNECT TO 48" MANHOLE.

'M' INLET S-3
GR: 1304.22
INV.(OUT): 1301.75 (P-3)

78 L.F. 15" HDPE @ 0.53% (P-3)

8" PVC

EX. INLET 2
GRT=1303.14
INV= 1301.34

P.O.B.

SMH
RIM=1304.06
INV = 1293.06

SMH
RIM=1303.38

4' SPLIT RAIL FENCE

N 88°58'12" W 180.00'

SMH
RIM=1306.74
INV= 1294.74

LOCATION OF SANITARY LATERAL AND ASSOCIATED CLEANOUTS FROM THE SANITARY MAIN TO THE EXISTING BUILDING IS UNKNOWN. CONTRACTOR TO FIELD VERIFY LOCATION OF SANITARY LATERAL AND CLEANOUTS PRIOR TO CONSTRUCTION. EXISTING SANITARY LATERAL AND CLEANOUTS TO BE UTILIZED TO THE EXTENT POSSIBLE FOR CONNECTION TO THE PROPOSED BUILDING. ANY PORTION OF THE SANITARY LATERAL AND CLEANOUTS NOT USED SHALL BE REMOVED. NEW SANITARY LATERAL/ CLEANOUTS TO BE INSTALLED AS REQUIRED TO PROVIDE SERVICE FROM THE PROPOSED BUILDING TO THE EXISTING SANITARY MAIN WITH A MINIMUM OF 2% SLOPE. MATERIAL AND SIZE TO MATCH EXISTING AND TO CONFORM WITH ALL LOCAL, STATE, AND FEDERAL REGULATIONS AS APPLICABLE.

PID: 430-S2-A21DA
LANDS N/F
CARR DAVID L ET AL
D. 1107-0051

PID: 430-S2-A21G
LANDS N/F
CARR DAVID L ET AL
D. 1107-0051

EXISTING 1 STORY FRAME & MASONRY BUILDING

ASPHALT PAVEMENT
GRASS
LAWN
GRAVEL
WhA
ASPHALT EDGE
ASPHALT SEAM
CURB
OHW
BHD
21" HDPE
12" CMP
8" PVC
31.8'
30.19'

LEGEND

EXISTING		PROPOSED
12+00 PI 13+00	TRAVERSE LINE, CENTER LINE OR BASELINE (LABEL AS SUCH)	12+00 13+00
	RIGHT OF WAY LINE	
	PROPERTY LINE	
	EDGE OF PAVEMENT	
FACE / BACK	CURB	FACE / BACK
	DEPRESSED CURB	
	SIDEWALK	
X X	FENCES	X X
	TREELINE	
	ROADWAY SIGNS	
	WETLAND LINE	
	MUNICIPAL BOUNDARY LINE	
	'C' INLET	
	'M' INLET	
	STORM MANHOLE	
	SANITARY MANHOLE	
	FLARED END SECTION	
	HEADWALL	
	HYDRANT	
	POLE MOUNTED LIGHT	
CATV	CABLE TV CONDUIT	CATV
W	WATER MAIN	W
G	GAS MAIN	G
T	TELEPHONE CONDUIT	T
E	ELECTRIC CONDUIT	E
	SANITARY PIPE	
	STORM PIPE	

10 0 10 20
SCALE : 1" = 10'

PLAN BOOK	PAGE
373	27

N
W E
S
NORTH

MASER CONSULTING P.A
Customer Loyalty through Client Satisfaction
www.maserconsulting.com
Engineers ■ Planners ■ Surveyors
Landscape Architects ■ Environmental Scientists

Office Locations:
■ Red Bank, NJ ■ Lehigh Valley, PA
■ Clinton, NJ ■ Exton, PA
■ Hamilton, NJ ■ Philadelphia, PA
■ Egg Harbor, NJ ■ Pittsburgh, PA
■ Montvale, NJ ■ Tampa, FL
■ Mt. Arlington, NJ ■ Orlando, FL
■ Mt. Laurel, NJ ■ Miami, FL
■ Albany, NY ■ Jacksonville, FL
■ New Windsor, NY ■ Sterling, VA
■ Westchester, NY ■ Norfolk, VA
■ Charlotte, NC ■ Albuquerque, NM
■ Raleigh, NC ■ Columbia, MD

Copyright © 2018. Maser Consulting. All Rights Reserved. This drawing and all the information contained herein is authorized for use only by the party for whom the services were contracted or to whom it is certified. This drawing may not be copied, reused, disclosed, distributed or relied upon for any other purpose without the express written consent of Maser Consulting, P.A.

811 PROTECT YOURSELF
ALL STATES REQUIRE NOTIFICATION OF EXCAVATORS, DESIGNERS, OR ANY PERSON PREPARING TO DISTURB THE EARTH'S SURFACE ANYWHERE IN ANY STATE
Know what's below. Call before you dig.
20181273405
FOR STATE SPECIFIC DIRECT PHONE NUMBERS VISIT: WWW.CALL811.COM

REV	DATE	DRAWN BY	DESCRIPTION
1	7/18/18	MD	REVISED PER COUNTY PLANNING COMMISSION COMMENTS AT 7/18/18 MTG

COMMONWEALTH OF PENNSYLVANIA
REGISTERED PROFESSIONAL
C. RICHARD ROSEBERRY
ENGINEER No. 46162

C. RICHARD ROSEBERRY
PENNSYLVANIA REGISTERED PROFESSIONAL ENGINEER - LICENSE NUMBER: PE46162-R

FINAL LAND DEVELOPMENT PLAN FOR MERCER COUNTY STATE BANK PROPOSED BANK SITE

PARCEL ID 430-S2-A21D-0000

549 SOUTH MAIN STREET

BOROUGH OF HARRISVILLE
BUTLER COUNTY
PENNSYLVANIA

PITTSBURGH OFFICE
North Shore Place II
322 Northshore Drive,
Building 1B, Suite 200
Pittsburgh, PA 15212
Phone: 877.627.3772

SCALE:	DATE:	DRAWN BY:	CHECKED BY:
AS SHOWN	07/10/18	MD	CRR

PROJECT NUMBER:	DRAWING NAME:
18001614A	C-UTIL

SHEET TITLE:
UTILITIES PLAN

SHEET NUMBER:
5 of 11

2018.1800.1614A\Engineering\Site Plans\C-UTIL.dwg C-05 UTILITIES By: MDIBERNARDUS

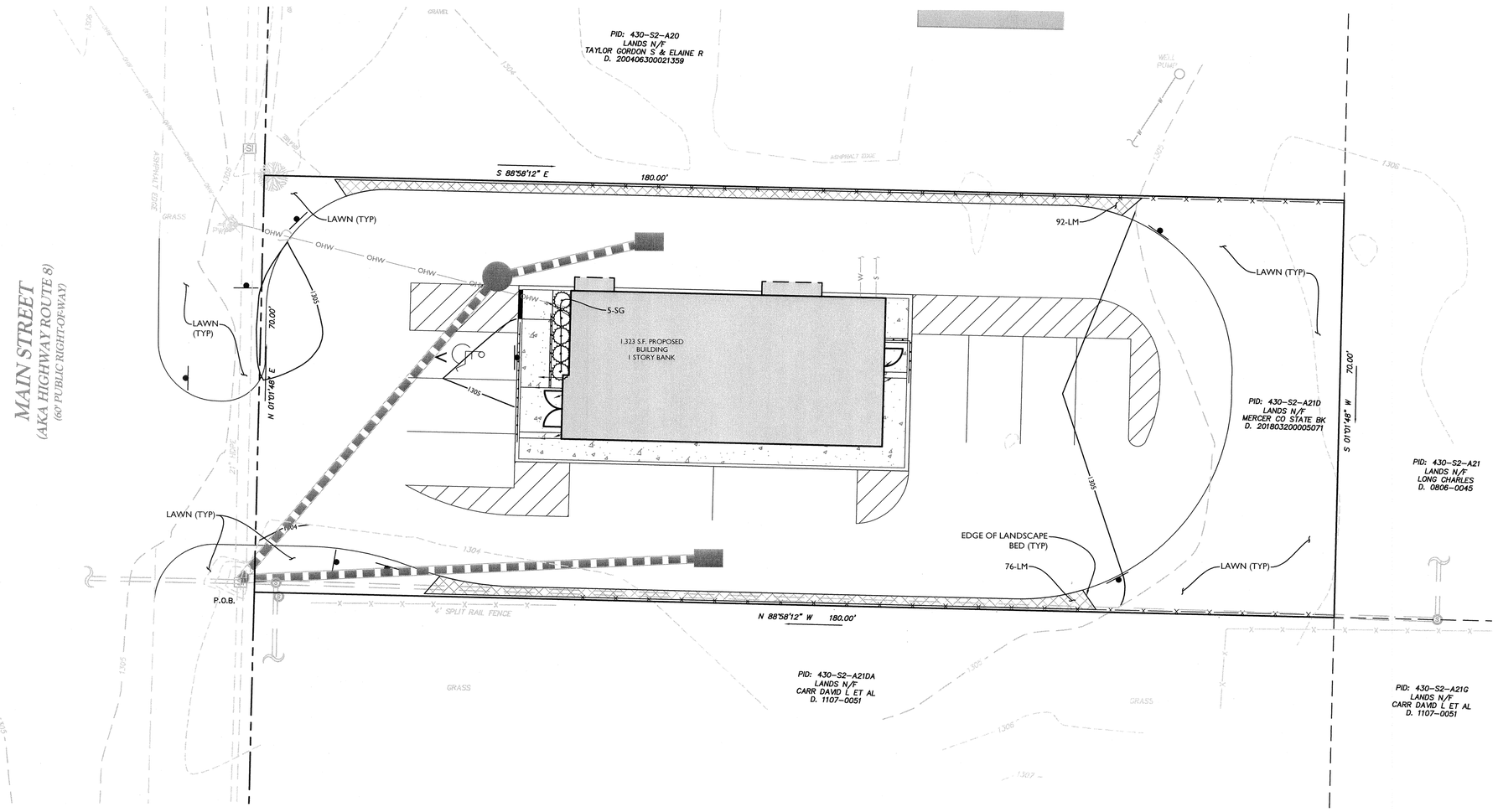

NOTE:
A LIGHTING PLAN HAS BEEN DESIGNED BY OTHERS AND HAS BEEN SUBMITTED FOR APPROVAL TO THE COUNTY PLANNING COMMISSION.

PLAN BOOK	PAGE
373	28

PLANT SCHEDULE						
Key	Qty	Scientific Name	Common Name	Size	Root	Spacing
Shrubs / Groundcover						
LM	168	Liriope muscari 'Big Blue'	Big Blue Lily Turf	1 Gal	Cont	18" o.c.
SG	5	Spirea japonica 'Goldmound'	Goldmound Spirea	18-24"	#3 Cont	36" o.c.

NOTE:
BALL OF ALL PLANTS TO BE KEPT MOIST AND PROTECTED FROM DAMAGE PRIOR TO PLANTING

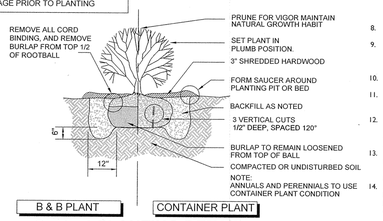

SHRUB PLANTING DETAIL
N.T.S.

EXISTING TREE PROTECTION NOTES:
1. NO SOIL DISTURBANCE OR COMPACTION, CONSTRUCTION MATERIALS, TRAFFIC, BURIAL PITS, TRENCHING OR OTHER LAND DISTURBANCE IS ALLOWED IN THE TREE PROTECTION ZONE UNLESS INDICATED ON THE PLAN.
2. TREE PROTECTION FENCE MUST BE INSTALLED PRIOR TO ANY DESTRUCTION AND/OR CONSTRUCTION ACTIVITY.
3. THE ROOT PROTECTION ZONE SHALL BE THE AREA ENCOMPASSED BY A CIRCLE WITH A RADIUS EXTENDING 1.25 FT. FROM THE TRUNK OF THE TREE FOR EVERY INCH DBH (DIAMETER AT BREAST HEIGHT) OF THE TREE.

PLANTING NOTES:
1. THIS PLAN SHALL BE USED FOR LANDSCAPE PLANTING PURPOSES ONLY. EXAMINE ALL ENGINEERING DRAWINGS AND FIELD CONDITIONS FOR SPECIFIC LOCATION OF UTILITIES AND STRUCTURES, AND NOTIFY THE LANDSCAPE ARCHITECT OF ANY DISCREPANCIES OR LOCATION CONFLICTS PRIOR TO PLANTING INSTALLATION.
2. THE CONTRACTOR IS RESPONSIBLE TO LOCATE AND VERIFY LOCATION OF ALL UTILITIES ON SITE PRIOR TO CONSTRUCTION.
3. ALL PLANT MATERIAL SHALL CONFORM TO THE STANDARDS OF THE AMERICAN ASSOCIATION OF NURSERYMEN AND THE AMERICAN STANDARD FOR NURSERY STOCK, LATEST EDITION, AMERICAN NURSERY AND LANDSCAPE ASSOCIATION OR THE PLANT MATERIAL WILL BE UNACCEPTABLE. ALL PLANT MATERIAL SHALL BE TRUE TO SPECIES, VARIETY, SIZE AND BE CERTIFIED DISEASE AND INSECT FREE. THE OWNER AND/OR THE LANDSCAPE ARCHITECT RESERVES THE RIGHT TO APPROVE ALL PLANT MATERIAL ON SITE PRIOR TO INSTALLATION.
4. NO PLANT SUBSTITUTIONS SHALL BE PERMITTED WITH REGARD TO SIZE, SPECIES, OR VARIETY WITHOUT WRITTEN PERMISSION OF THE LANDSCAPE ARCHITECT OR MUNICIPAL/COUNTY OFFICIALS. WRITTEN PROOF OF PLANT MATERIAL UNAVAILABILITY MUST BE DOCUMENTED.
5. THE LOCATION OF ALL PLANT MATERIAL INDICATED ON THE LANDSCAPE PLANS ARE APPROXIMATE. THE FINAL LOCATION OF ALL PLANT MATERIAL AND PLANTING BED LINES SHALL BE DETERMINED IN THE FIELD UNDER THE DIRECTION OF THE LANDSCAPE ARCHITECT. NO SHADE TREE, STREET TREE, ORNAMENTAL FLOWERING TREE OR EVERGREEN TREE SHALL BE PLANTED CLOSER THAN 10' FROM ANY DRIVEWAY, SIDEWALK, CURB, OR UTILITY LOCATION UNLESS SPECIFICALLY DIMENSIONED ON THE LANDSCAPE PLAN.
6. THE PLANTING PLAN SHALL TAKE PRECEDENCE OVER THE PLANT SCHEDULE SHOULD ANY PLANT QUANTITY DISCREPANCIES OCCUR.
7. ALL PLANT MATERIAL SHALL BE PROPERLY GUYED, STAKED, WRAPPED AND PLANTED IN CONFORMANCE WITH THE TYPICAL PLANTING DETAILS. GUY WIRES SHALL BE ATTACHED TO THE TREE AT A HEIGHT OF 2/3 THE HEIGHT OF THE TREE AND SHOULD BE LOCATED AT POINTS SO AS NOT TO SPLIT THE TRUNKS OF MULTI-STEMMED TREES. PROVIDE THREE TREE STAKES PER TREE. UNLESS NOTED OTHERWISE, INSTALL ALL PLAN MATERIAL ON UNDISTURBED GRADE. PROVIDE BURLAP WRAPPING WITH A 50% OVERLAP. CUT AND REMOVE BURLAP FROM THE TOP ONE-THIRD OF THE ROOT BALL.
8. BRANCHES OF DECIDUOUS TREES SHALL BE PRUNED TO PRESERVE THEIR CHARACTER AND SHAPE. THE CENTRAL LEADER OF THE TREE SHALL NOT BE PRUNED.
9. PROVIDE PLANTING PITS AS INDICATED ON PLANTING DETAILS. BACKFILL PLANTING PITS WITH ONE PART EACH OF TOPSOIL, PEAT MOSS AND PARENT MATERIAL. IF WET SOIL CONDITIONS EXIST, THEN PLANTING PITS SHALL BE EXCAVATED AN ADDITIONAL 12" AND FILLED WITH CRUSHED STONE.
10. ALL PLANT MATERIAL SHALL BEAR THE SAME RELATION TO FINISHED GRADE AS IT BORE TO EXISTING GRADE AT NURSERY.
11. NEWLY INSTALLED PLANT MATERIAL SHALL BE WATERED AT THE TIME OF INSTALLATION. REGULAR WATERING SHALL BE PROVIDED TO ENSURE THE ESTABLISHMENT, GROWTH AND SURVIVAL OF ALL PLANTS.
12. ALL PLANT MATERIAL SHALL BE GUARANTEED FOR ONE YEAR AFTER THE DATE OF FINAL ACCEPTANCE. ANY PLANT MATERIAL THAT DIES WITHIN THAT TIME PERIOD SHALL BE REMOVED, INCLUDING THE STUMP, AND REPLACED BY A TREE OF SIMILAR SIZE AND SPECIES AT THE EXPENSE OF THE CONTRACTOR.
13. THE LANDSCAPE CONTRACTOR SHALL PROVIDE A MINIMUM 6" LAYER OF TOPSOIL IN ALL LAWN AREAS AND A MINIMUM OF 12" OF TOPSOIL IN ALL PLANTING AREAS. A FULL SOIL ANALYSIS SHALL BE CONDUCTED AFTER CONSTRUCTION AND PRIOR TO PLANTING TO DETERMINE THE EXTENT OF SOIL AMENDMENT REQUIRED.
14. ALL DISTURBED LAWN AREAS SHALL BE STABILIZED WITH SEED AS INDICATED ON THE LANDSCAPE PLANS. SEED SHALL BE IN ACCORDANCE WITH THE LOCAL CONSERVATION DISTRICT'S SEED SPECIFICATIONS AS NOTED ON THE SOIL EROSION AND SEDIMENT CONTROL PLAN. ALL DISTURBED LAWN AREAS SHALL BE TOPSOILED, LIMED, FERTILIZED AND FINE GRADED PRIOR TO LAWN INSTALLATION.
15. UNLESS SPECIFIED, ALL PLANTING BEDS SHALL RECEIVE 3" OF SHREDDED HARDWOOD BARK.
16. ALL SHRUB MASSES SHALL BE PLANTED IN CONTINUOUS MULCHED BEDS.
17. ALL EXISTING TREES AND SHRUBS TO BE PRESERVED ON SITE SHALL BE PROTECTED AGAINST CONSTRUCTION DAMAGE BY SNOW FENCING. ALL FENCING SHALL BE PLACED OUTSIDE THE INDIVIDUAL TREE CANOPY. ALL TREES TO REMAIN SHALL BE IDENTIFIED IN THE FIELD PRIOR TO COMMENCEMENT OF CONSTRUCTION. TREE PROTECTION FENCING SHALL BE INSTALLED PRIOR TO COMMENCEMENT OF CONSTRUCTION, GRADING OR CLEARING. ALL EXISTING VEGETATION BEING PRESERVED AND LOCATED AT THE EDGE OF THE NEW TREELINE, SHALL BE PRUNED AND TRIMMED TO REMOVE ALL DEAD, DISEASED, OR DAMAGED BRANCHES.
18. ALL PLANTING DEBRIS (WIRE, TWINE, RUBBER HOSE, BACKFILL ETC.) SHALL BE REMOVED FROM THE SITE AFTER PLANTING IS COMPLETE. PROPERTY IS TO BE LEFT IN A NEAT, ORDERLY CONDITION IN ACCORDANCE WITH ACCEPTED PLANTING PRACTICES.
19. ALL TREE PLANTINGS SHALL BE INSTALLED A MINIMUM OF 10' FROM WATER LINES.

10 0 10 20
SCALE : 1" = 10'

MASER CONSULTING P.A.
Customer Loyalty through Client Satisfaction
www.maserconsulting.com
Engineers ■ Planners ■ Surveyors
Landscape Architects ■ Environmental Scientists
Office Locations:
■ Red Bank, NJ ■ Clinton, NJ ■ Hamilton, NJ ■ Egg Harbor, NJ ■ Montvale, NJ ■ Mt. Arlington, NJ ■ Mt. Laurel, NJ ■ Albany, NY ■ New Windsor, NY ■ Westchester, NY ■ Charlotte, NC ■ Raleigh, NC
■ Lehigh Valley, PA ■ Exton, PA ■ Philadelphia, PA ■ Pittsburgh, PA ■ Tampa, FL ■ Orlando, FL ■ Miami, FL ■ Jacksonville, FL ■ Sterling, VA ■ Norfolk, VA ■ Albuquerque, NM ■ Columbia, MD

Copyright © 2018 Maser Consulting. All Rights Reserved. This drawing and all the information contained herein is authorized for use only by the party for whom the services were contracted or to whom it is certified. This drawing may not be copied, reused, disclosed, distributed or relied upon for any other purpose without the express written consent of Maser Consulting, P.A.

PROTECT YOURSELF
ALL STATES REQUIRE NOTIFICATION OF EXCAVATORS, DESIGNERS, OR ANY PERSON PREPARING TO DISTURB THE EARTH'S SURFACE ANYWHERE IN ANY STATE
Know what's below. Call before you dig. 20181273405
FOR STATE SPECIFIC DIRECT PHONE NUMBERS VISIT: WWW.CALL811.COM

REV	DATE	DRAWN BY	DESCRIPTION
1	7/18/18	MD	REVISED PER COUNTY PLANNING COMMISSION COMMENTS AT 7/18/18 MTG

COMMONWEALTH OF PENNSYLVANIA
JENNIFER R. CADWALLADER
REGISTERED LANDSCAPE ARCHITECT
REGISTRATION NUMBER LA002871
JENNIFER R. CADWALLADER
PENNSYLVANIA REGISTERED
LANDSCAPE ARCHITECT - LICENSE NUMBER: LA002871

FINAL LAND DEVELOPMENT PLAN
FOR
MERCER COUNTY STATE BANK PROPOSED BANK SITE
PARCEL ID 430-S2-A21D-0000
549 SOUTH MAIN STREET
BOROUGH OF HARRISVILLE
BUTLER COUNTY
PENNSYLVANIA

PITTSBURGH OFFICE
North Shore Place II
322 Northshore Drive,
Building 1B, Suite 200
Pittsburgh, PA 15212
Phone: 877.627.3772

SCALE:	DATE:	DRAWN BY:	CHECKED BY:
AS SHOWN	07/10/18	MD	CRR
PROJECT NUMBER:	DRAWING NAME:		
I8001614A	C-LAND		

SHEET TITLE:
LANDSCAPE PLAN

SHEET NUMBER:
6 of 11

20181800161144/Engineering/Site Plans/C-LAND.dwg/C-06-LAND By: JCADWALLADER

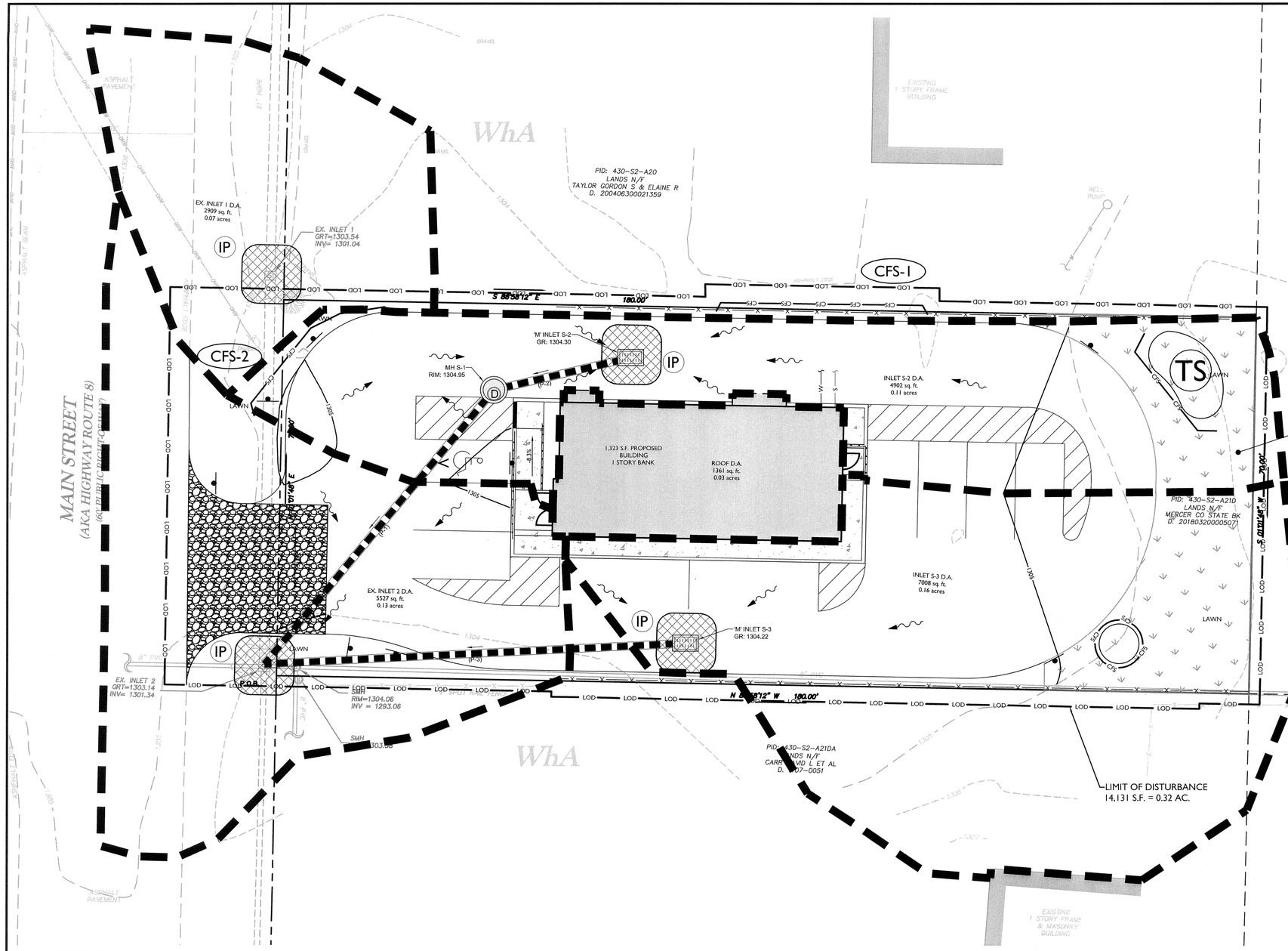

EROSION CONTROL LEGEND

	PROPOSED
INLET PROTECTION	IP
LIMIT OF DISTURBANCE	LOD
COMPOST FILTER SOCK & LABEL	CFS CFS-#
ROCK CONSTRUCTION ENTRANCE	
CONCRETE WASHOUT	CW
TOPSOIL STOCKPILE & 24" CFS	TS CFS
SOIL ID	WhA
SOIL AMENDMENTS	
INLET DRAINAGE AREA BOUNDARY	

COMPOST FILTER SOCK CHART

NUMBER	SIZE (INCHES)
CFS-1	18
CFS-2	18

INLET PROTECTION TABLE

INLET ID	MAXIMUM DRAINAGE AREA (ACRES)	INLET PROTECTION TYPE
EX. INLET 1	0.07	FILTER BAG
EX. INLET 2	0.13	FILTER BAG
S-2	0.11	FILTER BAG
S-3	0.16	FILTER BAG

- THE LIMIT OF DISTURBANCE BOUNDARY IS SHOWN OUTSIDE OF THE PROPERTY BOUNDARY FOR CLARITY. ALL DISTURBANCE WILL BE LOCATED WITHIN THE PROPERTY BOUNDARY AND LEGAL RIGHT-OF-WAY OF MAIN STREET (AKA ROUTE 8), EXCEPT WHERE OTHERWISE NOTED IN THE PLANS.
- CONSTRUCTION FENCE TO BE INSTALLED AT THE DISCRETION OF THE CONSTRUCTION MANAGER. THE CONSTRUCTION FENCE MUST BE INSTALLED TO MAINTAIN SAFE VEHICULAR AND PEDESTRIAN TRAFFIC PATTERNS AT ALL TIMES THROUGHOUT CONSTRUCTION.
- DO NOT INSTALL COMPOST FILTER SOCKS ON EROSION CONTROL MATTING.

E&S CONSTRUCTION TIMING & SEQUENCE

1. CONTACT BUTLER COUNTY CONSERVATION DISTRICT AT LEAST 48 HOURS PRIOR TO BEGINNING CONSTRUCTION.
2. ALL EARTH DISTURBANCE ACTIVITIES SHALL PROCEED IN ACCORDANCE WITH THE FOLLOWING SEQUENCE. EACH STAGE SHALL BE COMPLETED BEFORE ANY FOLLOWING STAGE IS INITIATED. CLEARING AND GRUBBING SHALL BE LIMITED ONLY TO THOSE AREAS DESCRIBED IN EACH STAGE.
3. ALL EXISTING UTILITIES SHOWN ON THE PLAN ARE SHOWN AT APPROXIMATE LOCATIONS. THE ENGINEER DOES NOT GUARANTEE ALL EXISTING UTILITIES ON SITE ARE SHOWN ON THE PLAN. IT IS THE RESPONSIBILITY OF THE CONTRACTOR TO VERIFY THE EXISTENCE OF ALL UTILITIES AND TO CALL THE PENNSYLVANIA ONE CALL SYSTEM (1-800-242-1776) BEFORE DIGGING.
4. INSTALL ROCK CONSTRUCTION ENTRANCE. NO CONSTRUCTION EQUIPMENT MAY LEAVE THE SITE PRIOR TO THE INSTALLATION OF THE ROCK CONSTRUCTION ENTRANCE.
5. INSTALL COMPOST FILTER SOCKS AT LOCATIONS SHOWN ON DRAWINGS. ADD INLET PROTECTION TO THE EXISTING INLETS AS SHOW IN THE PLANS.
6. REMOVE ALL ITEMS LISTED AS TO BE REMOVED IN THE SITE DEMOLITION PLAN INCLUDING THE EXISTING BUILDING AND CANOPY, FENCING, SHRUBS, ASPHALT PAVEMENT, GRAVEL, UTILITIES, AND CONCRETE PAVEMENT. ENSURE ALL DEMOLITION IS UPSLOPE OF ADEQUATE EROSION AND SEDIMENT POLLUTION CONTROL BMPS. DURING THE REMOVAL OF THE EXISTING FENCES AND CANOPY, DISTURBANCE TO ADJACENT PROPERTY SHALL BE MINIMIZED TO THE GREATEST EXTENT POSSIBLE. ANY DISTURBANCE SHALL BE REPAIRED AFTER REMOVAL OF THESE ITEMS.
7. STRIP TOPSOIL AND STOCKPILE. APPLY TEMPORARY SEEDING/MULCHING AS NECESSARY. 24" COMPOST FILTER SOCK MUST BE PLACED DOWNSLOPE FROM ALL STOCKPILES. IMMEDIATELY APPLY TEMPORARY SEEDING TO ALL STOCKPILES THAT WILL BE IN PLACE FOR 4 DAYS OR MORE.
8. ROUGH GRADE THE BUILDING PAD, DRIVEWAY, AISLES, AND PARKING LOT. ADJUST COMPOST FILTER SOCKS AS NEEDED TO FIT PROPOSED IMPROVEMENTS. PLACE EROSION CONTROL MATTING NAG S75 ON ANY STEEP SLOPES (OVER 2:1 SLOPE).
9. EXCAVATE AND CONSTRUCT BUILDING PAD. MAINTAIN E&S CONTROLS.
10. INSTALL UNDERGROUND WATERLINE AND SANITARY SEWER TO BUILDING. CONTRACTOR MUST BACKFILL TRENCH AS WORK PROCEEDS AND NOT LEAVE TRENCH OPEN. RESTORE E&S MEASURES AS WORK PROCEEDS. ALL EXCAVATED MATERIAL SHALL BE DEPOSITED UPHILL OF THE TRENCH.
11. INSTALL THE PROPOSED UNDERGROUND STORM SYSTEM, WORKING UPSLOPE FROM THE EXISTING INLET 2 TO THE PROPOSED INLET S-2 AND THE PROPOSED INLET S-3. INSTALL PROPOSED STORM LEADERS FROM BUILDING. LIMIT DAILY TRENCH EXCAVATION TO THE LENGTH OF PIPE PLACEMENT AND BACKFILLING THAT CAN BE COMPLETED IN THE SAME DAY. ALL OPEN TRENCHES MUST BE PROTECTED. WATER, WHICH ACCUMULATES IN THE OPEN TRENCH, WILL BE COMPLETELY REMOVED BY FILTER BAG PUMPING, BEFORE PIPE PLACEMENT AND/OR BACKFILLING BEGINS. INSTALL INLET PROTECTION AT THE PROPOSED INLET AFTER CONSTRUCTION, AS SHOWN ON THE PLANS.
12. REMOVE ANY EXCESS EXCAVATED MATERIALS FROM THE SITE AND DISPOSE OF IN AN APPROVED MANNER.
13. FINISH GRADE SITE WITH A MINIMUM THICKNESS OF 4" TO 8" OF TOPSOIL AND APPLY PERMANENT STABILIZATION. EROSION CONTROL MATTING SHALL BE INSTALLED ON ALL SLOPES 3H:1V OR STEEPER WITHIN THE DISTURBED AREAS.
14. PAVE DRIVEWAY. ONCE PAVING IS COMPLETED, ADD PAVEMENT MARKINGS.
15. INSTALL PROPOSED SIGNS, LIGHT POLES/FIXTURES AND PROPOSED PLANTS.
16. ONCE THE ABOVE IMPROVEMENTS ARE COMPLETED AND THE SITE IS STABILIZED, CONTACT THE COUNTY/BOROUGH FOR FINAL INSPECTION. UNTIL THE SITE IS STABILIZED ALL EROSION AND SEDIMENT CONTROLS MUST BE MAINTAINED PROPERLY. MAINTENANCE MUST INCLUDE INSPECTIONS OF ALL EROSION AND SEDIMENT CONTROLS AFTER EACH RUNOFF EVENT AND ON A WEEKLY BASIS. ALL PREVENTIVE AND REMEDIAL MAINTENANCE WORK, INCLUDING CLEAN OUT, REPAIR, REPLACEMENT, RE-GRADING, RESEEDING, RE-MULCHING, AND RE-NETTING, MUST BE PERFORMED IMMEDIATELY. CONTACT THE BUTLER COUNTY CONSERVATION DISTRICT PRIOR TO REMOVING E&S BMPS.
17. UPON THE RE-ESTABLISHMENT OF VEGETATION ON ALL DENUDED AREAS, ALL THE REMAINING TEMPORARY E&S CONTROLS SHOULD BE REMOVED. ALL AREAS DISTURBED DURING THE REMOVAL PROCESS SHOULD BE IMMEDIATELY STABILIZED.
18. AN AREA SHALL BE CONSIDERED TO HAVE ACHIEVED FINAL STABILIZATION WHEN IT HAS A MINIMUM UNIFORM 70% PERENNIAL VEGETATIVE COVER OR OTHER PERMANENT NON-VEGETATIVE COVER WITH A DENSITY SUFFICIENT TO RESIST ACCELERATED SURFACE EROSION AND SUBSURFACE CHARACTERISTICS SUFFICIENT TO RESIST SLIDING AND OTHER MOVEMENTS. IMMEDIATELY AFTER EARTH DISTURBANCE ACTIVITIES CEASE, THE OPERATOR SHALL STABILIZE ANY AREAS DISTURBED BY THE ACTIVITIES. DURING NON-GERMINATING PERIODS, MULCH MUST BE APPLIED AT THE SPECIFIED RATES.

THIS SITE FLOWS TO MCMURRAY RUN, WHICH IS PART OF THE CONNOQUENNESSING CREEK WATERSHED . THE PENNSYLVANIA CODE, TITLE 25, CHAPTER 93, WATER QUALITY STANDARDS LISTS A DESIGNATED USE OF COLD WATER FISHERY (CWF).

10 0 10 20
SCALE : 1" = 10'

PLAN BOOK 373 PAGE 29

MASER CONSULTING P.A.
Customer Loyalty through Client Satisfaction
www.maserconsulting.com
Engineers ■ Planners ■ Surveyors
Landscape Architects ■ Environmental Scientists
Office Locations:
■ Red Bank, NJ ■ Clinton, NJ ■ Hamilton, NJ ■ Egg Harbor, NJ ■ Montvale, NJ ■ Mt. Arlington, NJ ■ Mt. Laurel, NJ ■ Albany, NY ■ New Windsor, NY ■ Westchester, NY ■ Charlotte, NC ■ Raleigh, NC
■ Lehigh Valley, PA ■ Exton, PA ■ Philadelphia, PA ■ Pittsburgh, PA ■ Tampa, FL ■ Orlando, FL ■ Miami, FL ■ Jacksonville, FL ■ Sterling, VA ■ Norfolk, VA ■ Albuquerque, NM ■ Columbia, MD

Copyright © 2018 Maser Consulting. All Rights Reserved. This drawing and all the information contained herein is authorized for use only by the party for whom the services were contracted or to whom it is certified. This drawing may not be copied, reused, disclosed, distributed or relied upon for any other purpose without the express written consent of Maser Consulting, P.A.

811 Know what's below. Call before you dig.
PROTECT YOURSELF
ALL STATES REQUIRE NOTIFICATION OF EXCAVATORS, DESIGNERS, OR ANY PERSON PREPARING TO DISTURB THE EARTH'S SURFACE ANYWHERE IN ANY STATE
20181273405
FOR STATE SPECIFIC DIRECT PHONE NUMBERS VISIT: WWW.CALL811.COM

REV	DATE	DRAWN BY	DESCRIPTION
1	7/18/18	MD	REVISED PER COUNTY PLANNING COMMISSION COMMENTS AT 7/18/18 PTG

COMMONWEALTH OF PENNSYLVANIA
REGISTERED PROFESSIONAL
C. RICHARD ROSEBERRY
ENGINEER No. 46162

C. RICHARD ROSEBERRY
PENNSYLVANIA REGISTERED PROFESSIONAL ENGINEER - LICENSE NUMBER: PE46162-R

FINAL LAND DEVELOPMENT PLAN

FOR

MERCER COUNTY STATE BANK PROPOSED BANK SITE

PARCEL ID 430-S2-A21D-0000

549 SOUTH MAIN STREET

BOROUGH OF HARRISVILLE
BUTLER COUNTY
PENNSYLVANIA

PITTSBURGH OFFICE
North Shore Place II
322 Northshore Drive,
Building 1B, Suite 200
Pittsburgh, PA 15212
Phone: 877.627.3772

SCALE:	DATE:	DRAWN BY:	CHECKED BY:
AS SHOWN	07/10/18	MD	CRR
PROJECT NUMBER: 18001614A		DRAWING NAME: C-5ESC	

SHEET TITLE:
SOIL EROSION & SEDIMENT CONTROL PLAN

SHEET NUMBER:
7 of 11

2018\18001614A\Engineering\Site Plan\C-5ESC.dwg,C-07-LOA, 8/9/2018 By: JCADWALLADER

STANDARD EROSION AND SEDIMENT CONTROL NOTES

1) ALL EARTH DISTURBANCES, INCLUDING CLEARING AND GRUBBING AS WELL AS CUTS AND FILLS SHALL BE DONE IN ACCORDANCE WITH THE APPROVED E&S PLAN. A COPY OF THE APPROVED DRAWINGS (STAMPED, SIGNED AND DATED BY THE REVIEWING AGENCY) MUST BE AVAILABLE AT THE PROJECT SITE AT ALL TIMES. THE REVIEWING AGENCY SHALL BE NOTIFIED OF ANY CHANGES TO THE APPROVED PLAN PRIOR TO IMPLEMENTATION OF THOSE CHANGES. THE REVIEWING AGENCY MAY REQUIRE A WRITTEN SUBMITTAL OF THOSE CHANGES FOR REVIEW AND APPROVAL AT ITS DISCRETION.

2) AT LEAST 7 DAYS PRIOR TO STARTING ANY EARTH DISTURBANCE ACTIVITIES, INCLUDING CLEARING AND GRUBBING, THE OWNER AND/OR OPERATOR SHALL INVITE ALL CONTRACTORS, THE LANDOWNER, APPROPRIATE MUNICIPAL OFFICIALS, THE E&S PLAN PREPARER, AND A REPRESENTATIVE FROM THE LOCAL CONSERVATION DISTRICT TO AN ON-SITE PRECONSTRUCTION MEETING.

3) AT LEAST 3 DAYS PRIOR TO STARTING ANY EARTH DISTURBANCE ACTIVITIES, OR EXPANDING INTO AN AREA PREVIOUSLY UNMARKED, THE PENNSYLVANIA ONE CALL SYSTEM INC. SHALL BE NOTIFIED AT 1-800-242-1776 FOR THE LOCATION OF EXISTING UNDERGROUND UTILITIES.

4) ALL EARTH DISTURBANCE ACTIVITIES SHALL PROCEED IN ACCORDANCE WITH THE SEQUENCE PROVIDED ON THE PLAN DRAWINGS. DEVIATION FROM THAT SEQUENCE MUST BE APPROVED IN WRITING FROM THE LOCAL CONSERVATION DISTRICT OR BY THE DEPARTMENT PRIOR TO IMPLEMENTATION.

5) AREAS TO BE FILLED ARE TO BE CLEARED, GRUBBED, AND STRIPPED OF TOPSOIL TO REMOVE TREES, VEGETATION, ROOTS AND OTHER OBJECTIONABLE MATERIAL.

6) CLEARING, GRUBBING, AND TOPSOIL STRIPPING SHALL BE LIMITED TO THOSE AREAS DESCRIBED IN EACH STAGE OF THE CONSTRUCTION SEQUENCE. GENERAL SITE CLEARING, GRUBBING AND TOPSOIL STRIPPING MAY NOT COMMENCE IN ANY STAGE OR PHASE OF THE PROJECT UNTIL THE E&S BMPS SPECIFIED BY THE BMP SEQUENCE FOR THAT STAGE OR PHASE HAVE BEEN INSTALLED AND ARE FUNCTIONING AS DESCRIBED IN THIS E&S PLAN.

7) AT NO TIME SHALL CONSTRUCTION VEHICLES BE ALLOWED TO ENTER AREAS OUTSIDE THE LIMIT OF DISTURBANCE BOUNDARIES SHOWN ON THE PLAN MAPS. THESE AREAS MUST BE CLEARLY MARKED AND FENCED OFF BEFORE CLEARING AND GRUBBING OPERATIONS BEGIN.

8) TOPSOIL REQUIRED FOR THE ESTABLISHMENT OF VEGETATION SHALL BE STOCKPILED AT THE LOCATION(S) SHOWN ON THE PLAN MAP(S) IN THE AMOUNT NECESSARY TO COMPLETE THE FINISH GRADING OF ALL EXPOSED AREAS THAT ARE TO BE STABILIZED BY VEGETATION. EACH STOCKPILE SHALL BE PROTECTED IN THE MANNER SHOWN ON THE PLAN DRAWINGS. STOCKPILE HEIGHTS SHALL NOT EXCEED 35 FEET. STOCKPILE SLOPES SHALL BE 2H:1V OR FLATTER.

9) IMMEDIATELY UPON DISCOVERING UNFORESEEN CIRCUMSTANCES POSING THE POTENTIAL FOR ACCELERATED EROSION AND/OR SEDIMENT POLLUTION, THE OPERATOR SHALL IMPLEMENT APPROPRIATE BEST MANAGEMENT PRACTICES TO MINIMIZE THE POTENTIAL FOR EROSION AND SEDIMENT POLLUTION AND NOTIFY THE LOCAL CONSERVATION DISTRICT AND/OR THE REGIONAL OFFICE OF THE DEPARTMENT.

10) ALL BUILDING MATERIALS AND WASTES SHALL BE REMOVED FROM THE SITE AND RECYCLED OR DISPOSED OF IN ACCORDANCE WITH THE DEPARTMENT'S SOLID WASTE MANAGEMENT REGULATIONS AT 25 PA. CODE 260.1 ET SEQ., 271.1, AND 287.1 ET. SEQ. NO BUILDING MATERIALS OR WASTES OR UNUSED BUILDING MATERIALS SHALL BE BURNED, BURIED, DUMPED, OR DISCHARGED AT THIS SITE.

11) RECYCLING AND DISPOSAL OF MATERIALS: OPERATOR/PERMITTEE SHALL INSURE THAT PROPER MECHANISMS ARE IN PLACE TO CONTROL WASTE MATERIALS. CONSTRUCTION WASTES INCLUDE, BUT ARE NOT LIMITED TO, EXCESS SOIL MATERIALS, BUILDING MATERIALS, CONCRETE WASH WATER, SANITARY WASTES, ETC. THAT COULD ADVERSELY IMPACT WATER QUALITY. MEASURES SHOULD BE PLANNED AND IMPLEMENTED FOR HOUSEKEEPING, MATERIALS MANAGEMENT, AND LITTER CONTROL. WHEREVER POSSIBLE, RECYCLING OF EXCESS MATERIALS IS PREFERRED RATHER THAN DISPOSAL. OFF-SITE TRANSPORT OF MATERIALS REQUIRES THAT THE RECEIVING FACILITY HAVE ITS OWN APPROVED, ACTIVE PERMIT TO RECEIVE SUCH MATERIALS.

12) ALL OFF-SITE WASTE AND BORROW AREAS MUST HAVE AN E&S PLAN APPROVED BY THE LOCAL CONSERVATION DISTRICT OR THE DEPARTMENT FULLY IMPLEMENTED PRIOR TO BEING ACTIVATED.

13) THE CONTRACTOR IS RESPONSIBLE FOR ENSURING THAT ANY MATERIAL BROUGHT ON SITE IS CLEAN FILL. FORM FP-001 MUST BE RETAINED BY THE PROPERTY OWNER FOR ANY FILL MATERIAL AFFECTED BY A SPILL OR RELEASE OF A REGULATED SUBSTANCE BUT QUALIFYING AS CLEAN FILL DUE TO ANALYTICAL TESTING.

14) ALL PUMPING OF WATER FROM ANY WORK AREA SHALL BE DONE ACCORDING TO THE PROCEDURE DESCRIBED IN THIS PLAN, OVER UNDISTURBED VEGETATED AREAS. ALL PUMPING OF SEDIMENT LADEN WATER SHALL BE THROUGH A SEDIMENT CONTROL BMP, SUCH AS A PUMPED WATER FILTER BAG DISCHARGING OVER NON-DISTURBED AREAS.

15) VEHICLES AND EQUIPMENT MAY NEITHER ENTER DIRECTLY NOR EXIT DIRECTLY FROM MAIN STREET (AKA ROUTE 8). VEHICLES AND EQUIPMENT MAY ONLY ENTER AND EXIT THE CONSTRUCTION SITE VIA A STABILIZED ROCK CONSTRUCTION ENTRANCE.

16) UNTIL THE SITE IS STABILIZED, ALL EROSION AND SEDIMENT BMPS SHALL BE MAINTAINED PROPERLY. MAINTENANCE SHALL INCLUDE INSPECTIONS OF ALL EROSION AND SEDIMENT BMPS AFTER EACH RUNOFF EVENT AND ON A WEEKLY BASIS. THE OPERATOR WILL MAINTAIN AND MAKE AVAILABLE TO BUTLER COUNTY CONSERVATION DISTRICT COMPLETE, WRITTEN INSPECTION LOGS OF ALL THOSE INSPECTIONS. ALL PREVENTATIVE AND REMEDIAL MAINTENANCE WORK, INCLUDING CLEAN OUT, REPAIR, REPLACEMENT, REGRADING, RESEEDING, REMULCHING AND RENETTING MUST BE PERFORMED IMMEDIATELY. IF THE E&S BMPS FAIL TO PERFORM AS EXPECTED, REPLACEMENT BMPS, OR MODIFICATIONS OF THOSE INSTALLED WILL BE REQUIRED.

17) A LOG SHOWING DATES THAT E&S BMPS WERE INSPECTED AS WELL AS ANY DEFICIENCIES FOUND AND THE DATE THEY WERE CORRECTED SHALL BE MAINTAINED ON THE SITE AND BE MADE AVAILABLE TO REGULATORY AGENCY OFFICIALS AT THE TIME OF INSPECTION.

18) SEDIMENT TRACKED ONTO ANY PUBLIC ROADWAY OR SIDEWALK SHALL BE RETURNED TO THE CONSTRUCTION SITE BY THE END OF EACH WORK DAY AND DISPOSED IN THE MANNER DESCRIBED IN THIS PLAN. IN NO CASE SHALL THE SEDIMENT BE WASHED, SHOVELED, OR SWEPT INTO ANY ROADSIDE DITCH, STORM SEWER, OR SURFACE WATER.

19) ALL SEDIMENT REMOVED FROM BMPS SHALL BE DISPOSED OF IN THE MANNER DESCRIBED ON THE PLAN DRAWINGS. SEDIMENT REMOVED FROM BMPS SHALL BE DISPOSED OF IN LANDSCAPED AREAS OUTSIDE OF STEEP SLOPES, WETLANDS, FLOODPLAINS OR DRAINAGE SWALES AND IMMEDIATELY STABILIZED, OR PLACED IN TOPSOIL STOCKPILES.

20) AREAS WHICH ARE TO BE TOPSOILED SHALL BE SCARIFIED TO A MINIMUM DEPTH OF 3 TO 5 INCHES - 6 TO 12 INCHES ON COMPACTED SOILS - PRIOR TO PLACEMENT OF TOPSOIL. AREAS TO BE VEGETATED SHALL HAVE A MINIMUM 4 INCHES OF TOPSOIL IN PLACE PRIOR TO SEEDING AND MULCHING. FILL OUTSLOPES SHALL HAVE A MINIMUM OF 2 INCHES OF TOPSOIL.

21) ALL FILLS SHALL BE COMPACTED AS REQUIRED TO REDUCE EROSION, SLIPPAGE, SETTLEMENT, SUBSIDENCE OR OTHER RELATED PROBLEMS. FILL INTENDED TO SUPPORT BUILDINGS, STRUCTURES AND CONDUITS, ETC. SHALL BE COMPACTED IN ACCORDANCE WITH LOCAL REQUIREMENTS OR CODES.

22) ALL EARTHEN FILLS SHALL BE PLACED IN COMPACTED LAYERS NOT TO EXCEED 9 INCHES IN THICKNESS.

23) FILL MATERIALS SHALL BE FREE OF FROZEN PARTICLES, BRUSH, ROOTS, SOD, OR OTHER FOREIGN OR OBJECTIONABLE MATERIALS THAT WOULD INTERFERE WITH OR PREVENT CONSTRUCTION OF SATISFACTORY FILLS.

24) FROZEN MATERIALS OR SOFT, MUCKY, OR HIGHLY COMPRESSIBLE MATERIALS SHALL NOT BE INCORPORATED INTO FILLS.

25) FILL SHALL NOT BE PLACED ON SATURATED OR FROZEN SURFACES.

26) SEEPS OR SPRINGS ENCOUNTERED DURING CONSTRUCTION SHALL BE HANDLED IN ACCORDANCE WITH THE STANDARD AND SPECIFICATION FOR SUBSURFACE DRAIN OR OTHER APPROVED METHOD.

27) ALL GRADED AREAS SHALL BE PERMANENTLY STABILIZED IMMEDIATELY UPON REACHING FINISHED GRADE. CUT SLOPES IN COMPETENT BEDROCK AND ROCK FILLS NEED NOT BE VEGETATED. SEEDED AREAS WITHIN 50 FEET OF A SURFACE WATER, OR AS OTHERWISE SHOWN ON THE PLAN DRAWINGS, SHALL BE BLANKETED ACCORDING TO THE STANDARDS OF THIS PLAN.

28) IMMEDIATELY AFTER EARTH DISTURBANCE ACTIVITIES CEASE IN ANY AREA OR SUBAREA OF THE PROJECT, THE OPERATOR SHALL STABILIZE ALL DISTURBED AREAS. DURING NON-GERMINATING MONTHS, MULCH OR OTHER PROTECTIVE BLANKETING SHALL BE APPLIED AS DESCRIBED IN THE PLAN. AREAS NOT AT FINISHED GRADE, WHICH WILL BE REACTIVATED WITHIN 1 YEAR, MAY BE STABILIZED IN ACCORDANCE WITH THE TEMPORARY STABILIZATION SPECIFICATIONS. THOSE AREAS WHICH WILL NOT BE REACTIVATED WITHIN 1 YEAR SHALL BE STABILIZED IN ACCORDANCE WITH THE PERMANENT STABILIZATION SPECIFICATIONS.

29) PERMANENT STABILIZATION IS DEFINED AS A MINIMUM UNIFORM, PERENNIAL 70% VEGETATIVE COVER OR OTHER PERMANENT NON-VEGETATIVE COVER WITH A DENSITY SUFFICIENT TO RESIST ACCELERATED EROSION. CUT AND FILL SLOPES SHALL BE CAPABLE OF RESISTING FAILURE DUE TO SLUMPING, SLIDING, OR MOTHER MOVEMENTS.

30) EROSION AND SEDIMENT BMPS MUST BE CONSTRUCTED, STABILIZED, AND FUNCTIONAL BEFORE SITE DISTURBANCE BEGINS WITHIN THE TRIBUTARY AREAS OF THOSE BMPS. E&S BMPS SHALL REMAIN FUNCTIONAL AS SUCH UNTIL ALL AREAS TRIBUTARY TO THEM ARE PERMANENTLY STABILIZED OR UNTIL THEY ARE REPLACED BY ANOTHER BMP APPROVED BY THE LOCAL CONSERVATION DISTRICT OR THE DEPARTMENT.

31) UPON COMPLETION OF ALL EARTH DISTURBANCE ACTIVITIES AND PERMANENT STABILIZATION OF ALL DISTURBED AREAS, THE OWNER AND/OR OPERATOR SHALL CONTACT THE LOCAL CONSERVATION DISTRICT FOR AN INSPECTION PRIOR TO REMOVAL/CONVERSION OF THE E&S BMPS.

32) AFTER FINAL SITE STABILIZATION HAS BEEN ACHIEVED, TEMPORARY EROSION AND SEDIMENT BMPS MUST BE REMOVED OR CONVERTED TO PERMANENT POST CONSTRUCTION STORMWATER MANAGEMENT BMPS. AREAS DISTURBED DURING REMOVAL OR CONVERSION OF THE BMPS SHALL BE STABILIZED IMMEDIATELY. IN ORDER TO ENSURE RAPID REVEGETATION OF DISTURBED AREAS, SUCH REMOVAL/CONVERSIONS ARE TO BE DONE ONLY DURING THE GERMINATING SEASON.

33) UPON COMPLETION OF ALL EARTH DISTURBANCE ACTIVITIES AND PERMANENT STABILIZATION OF ALL DISTURBED AREAS, THE OWNER AND/OR OPERATOR SHALL CONTACT THE LOCAL CONSERVATION DISTRICT TO SCHEDULE A FINAL INSPECTION.

34) FAILURE TO CORRECTLY INSTALL E&S BMPS, FAILURE TO PREVENT SEDIMENT-LADEN RUNOFF FROM LEAVING THE CONSTRUCTION SITE OR FAILURE TO TAKE IMMEDIATE CORRECTIVE ACTION TO RESOLVE FAILURE OF E&S BMPS MAY RESULT IN ADMINISTRATIVE, CIVIL, AND/OR CRIMINAL PENALTIES BEING INSTITUTED BY THE DEPARTMENT AS DEFINED IN SECTION 602 OF THE CLEAN STREAMS LAW. THE CLEAN STREAMS LAW PROVIDES FOR UP TO $10,000 PER DAY IN CIVIL PENALTIES, UP TO $10,000 IN SUMMARY CRIMINAL PENALTIES, AND UP TO $25,000 IN MISDEMEANOR CRIMINAL PENALTIES FOR EACH VIOLATION.

35) IN THE EVENT OF SINKHOLE DISCOVERY A PROFESSIONAL GEOLOGIST OR ENGINEER WILL BE CONTACTED CONCERNING MITIGATION. ADDITIONALLY, THE BUTLER COUNTY CONSERVATION DISTRICT WILL BE MADE AWARE OF THE SINKHOLE DISCOVERY IMMEDIATELY.

36) THE OPERATOR SHALL ASSURE THAT THE APPROVED EROSION AND SEDIMENT CONTROL PLAN IS PROPERLY AND COMPLETELY IMPLEMENTED.

37) THE CONTRACTOR IS ADVISED TO BECOME THOROUGHLY FAMILIAR WITH THE PROVISIONS OF THE APPENDIX 64, EROSION CONTROL RULES AND REGULATIONS, TITLE 25, PART 1, DEPARTMENT OF ENVIRONMENTAL PROTECTION, SUBPART C, PROTECTION OF NATURAL RESOURCES, ARTICLE III, WATER RESOURCES, CHAPTER 102, EROSION CONTROL.

38) STRAW MULCH SHALL BE APPLIED IN LONG STRANDS, NOT CHOPPED OR FINELY BROKEN.

39) CONCRETE WASH WATER SHALL BE HANDLED IN THE MANNER DESCRIBED ON THE PLAN DRAWINGS. IN NO CASE SHALL IT BE ALLOWED TO ENTER ANY SURFACE WATERS OR GROUNDWATER SYSTEMS.

40) EROSION CONTROL MATTING SHALL BE INSTALLED ON ALL SLOPES 3H:1V OR STEEPER, WITHIN 50 FEET OF A SURFACE WATER AND ON ALL OTHER DISTURBED AREAS SPECIFIED ON THE PLAN MAPS AND/OR DETAIL SHEETS.

2018\18001614A\Engineering\Site Plans\C-SESC.dwg\C-08-E&S DETAILS By: MDEJESUS

SEEDING AND SOIL SUPPLEMENTS

THE FOLLOWING SPECIFICATIONS ARE IN ACCORDANCE WITH PENNDOT PUBLICATION 408, SECTION 804.

TEMPORARY SEED MIXTURES

SEED TYPE	% BY WEIGHT	PURITY	MAX. WEED SEED
(PENNDOT FORMULA E)			
ANNUAL RYEGRASS	100	95%	0.10%

APPLY SEED AT A RATE OF 10 LBS. PER 1,000 SY.
APPLY STRAW MULCH (SEE MULCH APPLICATION RATES TABLE)
SEEDING SEASON DATES: MARCH 15 TO OCTOBER 15

PERMANENT SEED MIXTURES

SEED TYPE	% BY WEIGHT	PURITY	MAX. WEED SEED
(PENNDOT FORMULA B)			
PERENNIAL RYEGRASS MIXTURE *	20	97%	0.10%
(LOLIUM PERENNE)			
CREEPING RED FESCUE	30	97%	0.10%
KENTUCKY BLUEGRASS MIXTURE **	50	97%	0.15%
(POA PRATENSIS)			

APPLY SEED AT A RATE OF 42 LBS. PER 1,000 SY.
APPLY STRAW OR HAY MULCH (SEE MULCH APPLICATION RATES TABLE)
APPLY PULVERIZED AGRICULTURAL LIMESTONE AT A RATE OF 2 TONS/ACRE UNLESS TESTING HAS BEEN PERFORMED.
APPLY 10-20-20 ANALYSIS COMMERCIAL FERTILIZER AT A RATE OF 678 LBS./ACRE UNLESS TESTING HAS BEEN PERFORMED.
SEEDING SEASON DATES: MARCH 15 TO JUNE 1; AUGUST 1 TO OCTOBER 15
APPLY FLEXTERRA FGM (OR EQUAL) ACCORDING TO MANUFACTURER'S SPECIFICATIONS.

* A COMBINATION OF IMPROVED CERTIFIED VARIETIES WITH NO ONE VARIETY EXCEEDING 50% OF THE TOTAL RYEGRASS COMPONENT.
** A COMBINATION OF IMPROVED CERTIFIED VARIETIES WITH NO ONE VARIETY EXCEEDING 50% OF THE TOTAL BLUEGRASS COMPONENT.

PERMANENT SEED MIXTURES ON STEEP SLOPES (SLOPES EXCEEDING 3:1)

SEED TYPE	% BY WEIGHT	PURITY	MAX. WEED SEED
(PENNDOT FORMULA L)			
HARD FESCUE	55	97%	0.10%
(FESTUCA LONGIFOLIA***)			
CREEPING RED FESCUE	35	97%	0.10%
(FESTUCA RUBRA)			
ANNUAL RYEGRASS			
(LOLIUM MULTIFLORUM)	10	95%	0.10%

APPLY SEED AT A RATE OF 48 LBS / 1,000 SY.
MULCH WITH MULCH CONTROL NETTING OR EROSION CONTROL BLANKETS MUST BE INSTALLED. APPLY PULVERIZED AGRICULTURAL LIMESTONE AT A RATE OF 2 TONS/ACRE UNLESS TESTING HAS BEEN PERFORMED.
APPLY 10-20-20 ANALYSIS COMMERCIAL FERTILIZER AT A RATE OF 678 LBS./ACRE UNLESS TESTING HAS BEEN PERFORMED.
SEEDING SEASON DATES: MARCH 15 TO JUNE 1; AUGUST 1 TO OCTOBER 15

*** A COMBINATION OF IMPROVED CERTIFIED VARIETIES WITH NO ONE VARIETY EXCEEDING 50% OF THE TOTAL HARD FESCUE COMPONENT.

MULCH APPLICATION RATE				
MULCH TYPE	APPLICATION RATE (MIN)			NOTES
	PER ACRE	PER 1,000 SF	PER 1,000 SY	
STRAW	3 TONS	134 LB	1,200 LB	EITHER WHEAT OR OAT STRAW, FREE OF WEEDS, NOT CHOPPED OR FINELY BROKEN
HAY	3 TONS	134 LB	1,200 LB	TIMOTHY, MIXED CLOVER AND TIMOTHY OR OTHER NATIVE FORAGE GRASSES

RECYCLING OR DISPOSAL OF MATERIALS

THE CONTRACTOR SHALL REMOVE FROM THE SITE, RECYCLE, OR DISPOSE OF ALL BUILDING MATERIALS AND WASTES IN ACCORDANCE WITH PENNSYLVANIA DEPARTMENT OF ENVIRONMENTAL PROCTECTION'S SOLID WASTE MANAGEMENT REGULATIONS AT 25 PA CODE 260.1 ET SEQ., 271.1 ET SEQ., AND 287.1 ET SEQ. THE CONTRACTOR SHALL NOT LEGALLY BURY, DUMP OR DISCHARGE ANY BUILDING MATERIAL OR WASTES AT THE SITE.

ENVIRONMENTAL DUE DILIGENCE

IF THE SITE WILL NEED TO IMPORT OR EXPORT MATERIAL FROM THE SITE, THE RESPONSIBILITY FOR PERFORMING ENVIRONMENTAL DUE DILIGENCE AND DETERMINATION OF CLEAN FILL WILL REST WITH THE PROPERTY OWNER/PERMITEE.

PROCEDURE FOR MANAGING SOIL, GROUNDWATER, AND OTHER POTENTIALLY CONTAMINATED MATERIALS GENERATED OR EXPOSED DURING CONSTRUCTION AND FOR THE REUSE AND/OR OFF-SITE DISPOSAL OF GENERATED MATERIALS

1. ANY EXCAVATED SOIL WHICH IS CONFIRMED TO BE CONTAMINATED AT CONCENTRATIONS WHICH EXCEED THE PADEP CLEAN FILL STANDARDS FOR RESIDENCES SHOULD BE DISPOSED OFF-SITE AT A PERMITTED FACILITY. DISPOSAL MANIFESTS SHOULD BE MAINTAINED. EXCAVATED SOILS SHOULD BE PLACED IMMEDIATELY INTO TRUCKS FOR OFF-SITE DISPOSAL. SOIL AWAITING OFF-SITE DISPOSAL SHALL BE PLACED ON AND COVERED BY POLYETHYLENE SHEETING.
2. IF THE SITE WILL NEED TO IMPORT OR EXPORT MATERIAL FROM THE SITE, THE RESPONSIBILITY FOR PERFORMING ENVIRONMENTAL DUE DILIGENCE AND DETERMINATION OF CLEAN FILL WILL REST WITH THE CONTRACTOR.
3. IF THE FILL MAY HAVE BEEN AFFECTED BY A SPILL OR RELEASE OF A REGULATED SUBSTANCE, IT MUST BE TESTED TO DETERMINE IF IT QUALIFIES AS CLEAN FILL. TESTING SHOULD BE PERFORMED IN ACCORDANCE WITH APPENDIX A OF THE DEPARTMENT'S POLICY "MANAGEMENT OF FILL".
4. FILL MATERIAL THAT DOES NOT QUALIFY AS CLEAN FILL IS REGULATED FILL. REGULATED FILL IS WASTE AND MUST BE MANAGED IN ACCORDANCE WITH THE DEPARTMENT'S MUNICIPAL OR RESIDUAL WASTE REGULATIONS BASED ON 25 PA CODE CHAPTERS 287 RESIDUAL WASTE MANAGEMENT OR 271 MUNICIPAL WASTE MANAGEMENT, WHICHEVER IS APPLICABLE. THIS REGULATIONS ARE AVAILABLE ON-LINE AT WWW.PACODE.COM .

STORMSEWER PIPE TRENCH EXCAVATION NOTES

1. LIMIT ADVANCED CLEARING AND GRUBBING OPERATIONS TO A DISTANCE EQUAL TO TWO TIMES THE LENGTH OF PIPE INSTALLATION THAT CAN BE COMPLETED IN ONE DAY.
2. WORK CREWS AND EQUIPMENT FOR TRENCHING, PLACEMENT OF PIPE, PLUG CONSTRUCTION AND BACKFILLING WILL BE SELF CONTAINED AND SEPARATE FROM CLEARING AND GRUBBING AND SITE RESTORATION AND STABILIZATION OPERATIONS.
3. ALL SOIL EXCAVATED FROM THE TRENCH WILL BE PLACED ON THE UPHILL SIDE OF THE TRENCH.
4. LIMIT DAILY TRENCH EXCAVATION TO THE LENGTH OF PIPE PLACEMENT, PLUG INSTALLATION AND BACKFILLING THAT CAN BE COMPLETED THE SAME DAY.
5. WATER WHICH ACCUMULATES IN THE OPEN TRENCH WILL BE COMPLETELY REMOVED BY PUMPING BEFORE PIPE PLACEMENT AND / OR BACKFILLING BEGINS. WATER REMOVED FROM THE TRENCH SHALL BE PUMPED THROUGH A FILTRATION DEVICE.
6. ON THE DAY FOLLOWING PIPE PLACEMENT AND TRENCH BACKFILLING, THE DISTURBED AREA WILL BE GRADED TO FINAL CONTOURS AND IMMEDIATELY STABILIZED.

PREPARATION OF AREAS TO BE TOPSOILED

GRADE THE AREAS TO BE COVERED BY TOPSOIL USING ACCEPTABLE METHODS, LOOSEN SOIL TO A DEPTH OF 2 INCHES BEFORE PLACING THE TOPSOIL. REMOVE STONES AND OTHER FOREIGN MATERIAL 2 INCHES OR LARGER IN DIMENSION. REMOVE AND SATISFACTORILY DISPOSE OF UNSUITABLE AND SURPLUS MATERIAL

PLACING AND SPREADING TOPSOIL

PLACE TOPSOIL ON THE PREPARED AREAS AND, UNLESS OTHERWISE INDICATED, SPREAD AND COMPACT TO A 4-INCH UNIFORM DEPTH ± 1 1/2 INCHES. COMPACT WITH A ROLLER WEIGHING NOT OVER 120 POUNDS PER FOOT WIDTH OF ROLLER OR BY OTHER ACCEPTABLE METHODS, AS DIRECTED. REMOVE OVERDEPTH TOPSOIL, UNLESS OTHERWISE AGREED UPON IN WRITING. DO NOT PLACE TOPSOIL IN A WET OR FROZEN CONDITION.

E&S PLAN - PLANNING AND DESIGN - SECTION 102.4(B)(4)

1. E&S PLAN MINIMIZES THE EXTENT AND DURATION OF THE EARTH DISTURBANCE ACTIVITY.
2. E&S PLAN MAXIMIZES PROTECTION OF EXISTING DRAINAGE FEATURES AND VEGETATION.
3. E&S PLAN MINIMIZES SOIL COMPACTION.
4. E&S PLAN UTILIZES OTHER MEASURES OR CONTROLS THAT PREVENT OR MINIMIZE GENERATION OF INCREASED STORMWATER RUNOFF.

MEASURES PROVIDED TO MINIMIZE THERMAL IMPACTS

MOST OF THE SURFACE RUNOFF WILL BE CAPTURED AND DIRECTED TO EXISTING SUBSURFACE UNDERDRAINS, CREATING AMPLE OPPORTUNITY FOR COOLING PRIOR TO REACHING THE SURFACE WATER. AS SUCH, THE PROJECT WILL NOT HAVE AN ADVERSE IMPACT ON THE NATURAL TEMPERATURES OF THE RECEIVING SURFACE WATERS.

PLAN BOOK	PAGE
373	30

MASER CONSULTING P.A.
Customer Loyalty *through* Client Satisfaction
www.maserconsulting.com
Engineers ■ Planners ■ Surveyors
Landscape Architects ■ Environmental Scientists
Office Locations:
■ Red Bank, NJ ■ Clinton, NJ ■ Hamilton, NJ ■ Egg Harbor, NJ ■ Montvale, NJ ■ Mt. Arlington, NJ ■ Mt. Laurel, NJ ■ Albany, NY ■ New Windsor, NY ■ Westchester, NY ■ Charlotte, NC ■ Raleigh, NC
■ Lehigh Valley, PA ■ Exton, PA ■ Philadelphia, PA ■ Pittsburgh, PA ■ Tampa, FL ■ Orlando, FL ■ Miami, FL ■ Jacksonville, FL ■ Sterling, VA ■ Norfolk, VA ■ Albuquerque, NM ■ Columbia, MD

Copyright © 2018. Maser Consulting. All Rights Reserved. This drawing and all the information contained herein is authorized for use only by the party for whom the services were contracted or to whom it is certified. This drawing may not be copied, reused, disclosed, distributed or relied upon for any other purpose without the express written consent of Maser Consulting, P.A.

811
Know what's below. Call before you dig.
PROTECT YOURSELF
ALL STATES REQUIRE NOTIFICATION OF EXCAVATORS, DESIGNERS, OR ANY PERSON PREPARING TO DISTURB THE EARTH'S SURFACE ANYWHERE IN ANY STATE
20181273405
FOR STATE SPECIFIC DIRECT PHONE NUMBERS VISIT: WWW.CALL811.COM

REV	DATE	DRAWN BY	DESCRIPTION
1	7/18/18	MD	REVISED PER COUNTY PLANNING COMMISSION COMMENTS AT 7/18/18 MTG
-	-	-	-
-	-	-	-
-	-	-	-
-	-	-	-
-	-	-	-
-	-	-	-
-	-	-	-
-	-	-	-

COMMONWEALTH OF PENNSYLVANIA
REGISTERED PROFESSIONAL
C. RICHARD ROSEBERRY
ENGINEER
No. 46162

C. RICHARD ROSEBERRY
PENNSYLVANIA REGISTERED PROFESSIONAL ENGINEER - LICENSE NUMBER: PE46162-R

FINAL
LAND DEVELOPMENT
PLAN
FOR
MERCER COUNTY STATE BANK PROPOSED BANK SITE
PARCEL ID 430-S2-A21D-0000
549 SOUTH MAIN STREET
BOROUGH OF HARRISVILLE
BUTLER COUNTY
PENNSYLVANIA

PITTSBURGH OFFICE
North Shore Place II
322 Northshore Drive,
Building 1B, Suite 200
Pittsburgh, PA 15212
Phone: 877.627.3772

SCALE:	DATE:	DRAWN BY:	CHECKED BY:
AS SHOWN	07/10/18	MD	CRR
PROJECT NUMBER: 18001614A	DRAWING NAME: C-SESC		

SHEET TITLE:
SOIL EROSION & SEDIMENT CONTROL DETAILS

SHEET NUMBER:
8 of 11

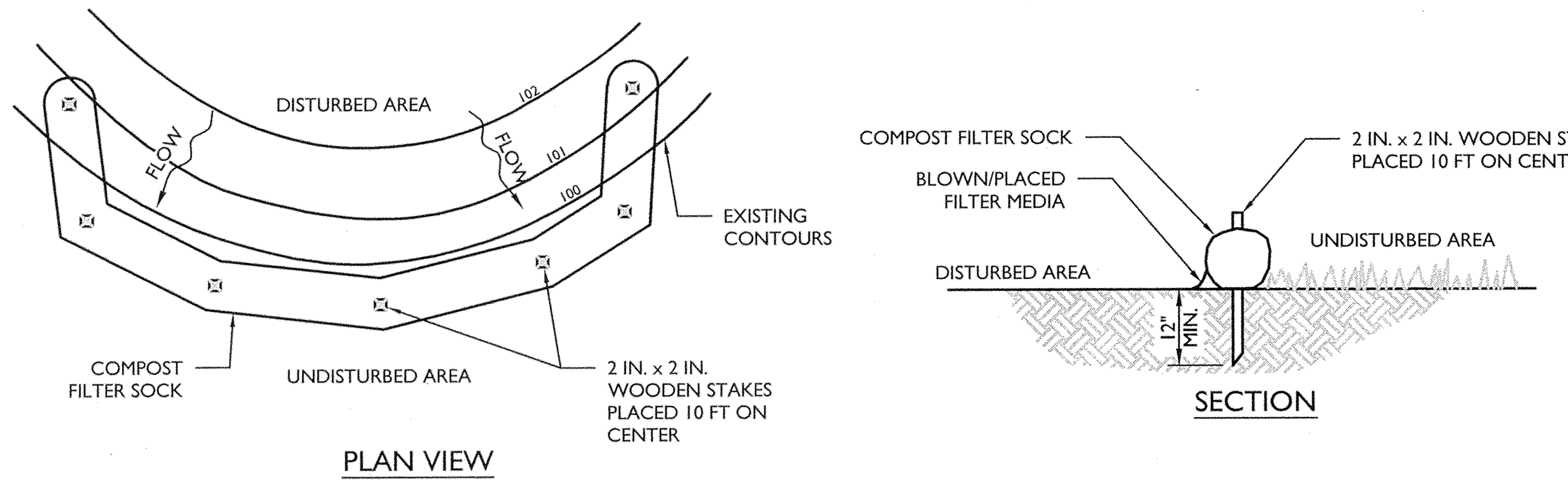

NOTES:

1. SOCK FABRIC SHALL MEET STANDARDS OF TABLE 4.1 OF THE PA DEP EROSION CONTROL MANUAL. COMPOST SHALL MEET THE STANDARDS OF TABLE 4.2 OF THE PA DEP EROSION CONTROL MANUAL.
2. COMPOST FILTER SOCK SHALL BE PLACED AT EXISTING LEVEL GRADE. BOTH ENDS OF THE BARRIER SHALL BE EXTENDED AT LEAST 8 FEET UP SLOPE AT 45 DEGREES TO THE MAIN BARRIER ALIGNMENT. MAXIMUM SLOPE LENGTH ABOVE ANY BARRIER SHALL NOT EXCEED THAT SPECIFIED FOR THE SIZE OF THE SOCK AND THE SLOPE OF ITS TRIBUTARY AREA.
3. TRAFFIC SHALL NOT BE PERMITTED TO CROSS COMPOST FILTER SOCKS.
4. ACCUMULATED SEDIMENT SHALL BE REMOVED WHEN IT REACHES 1/2 THE ABOVE GROUND HEIGHT OF THE BARRIER AND DISPOSED IN THE MANNER DESCRIBED ELSEWHERE IN THE PLAN.
5. COMPOST FILTER SOCKS SHALL BE INSPECTED WEEKLY AND AFTER EACH RUNOFF EVENT. DAMAGED SOCKS SHALL BE REPAIRED ACCORDING TO MANUFACTURER'S SPECIFICATIONS OR REPLACED WITHIN 24 HOURS OF INSPECTION.
6. BIODEGRADABLE COMPOST FILTER SOCKS SHALL BE REPLACED AFTER 6 MONTHS; PHOTODEGRADABLE SOCKS AFTER 1 YEAR. POLYPROPYLENE SOCKS SHALL BE REPLACED ACCORDING TO MANUFACTURER'S RECOMMENDATIONS.
7. UPON STABILIZATION OF THE AREA TRIBUTARY TO THE SOCK, STAKES SHALL BE REMOVED. THE SOCK MAY BE LEFT IN PLACE AND VEGETATED OR REMOVED. IN THE LATTER CASE, THE MESH SHALL BE CUT OPEN AND THE MULCH SPREAD AS A SOIL SUPPLEMENT.

STANDARD CONSTRUCTION DETAIL # 4-1
COMPOST FILTER SOCK

NOT TO SCALE
MCPA-SOIL-EROS-1600
05/01/18

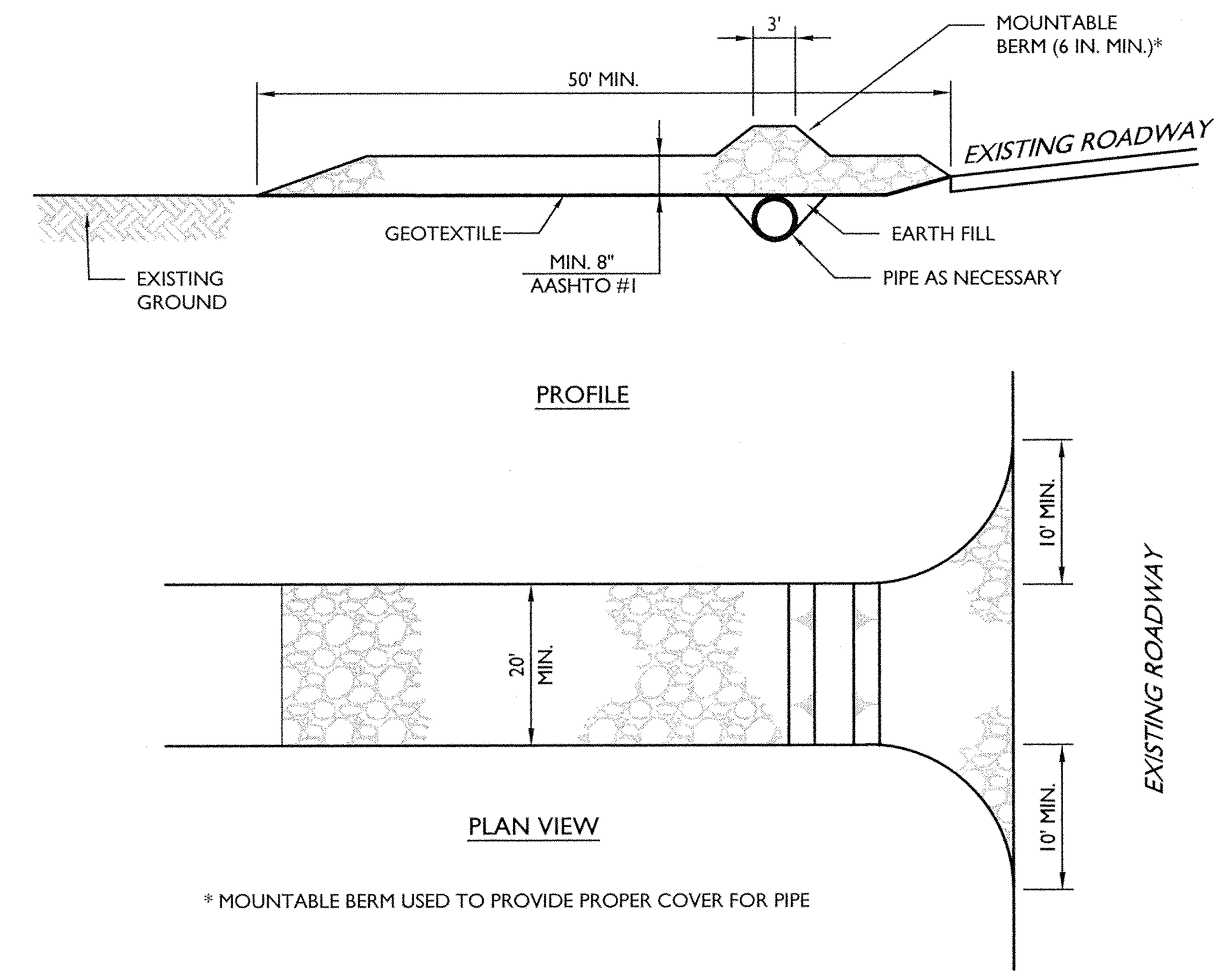

NOTES:

1. REMOVE TOPSOIL PRIOR TO INSTALLATION OF ROCK CONSTRUCTION ENTRANCE. EXTEND ROCK OVER FULL WIDTH OF ENTRANCE.
2. RUNOFF SHALL BE DIVERTED FROM ROADWAY TO A SUITABLE SEDIMENT REMOVAL BMP PRIOR TO ENTERING ROCK CONSTRUCTION ENTRANCE.
3. MOUNTABLE BERM SHALL BE INSTALLED WHEREVER OPTIONAL CULVERT PIPE IS USED AND PROPER PIPE COVER AS SPECIFIED BY MANUFACTURER IS NOT OTHERWISE PROVIDED. PIPE SHALL BE SIZED APPROPRIATELY FOR SIZE OF DITCH BEING CROSSED.
4. MAINTENANCE: ROCK CONSTRUCTION ENTRANCE THICKNESS SHALL BE CONSTANTLY MAINTAINED TO THE SPECIFIED DIMENSIONS BY ADDING ROCK. A STOCKPILE SHALL BE MAINTAINED ON SITE FOR THIS PURPOSE. ALL SEDIMENT DEPOSITED ON PAVED ROADWAYS SHALL BE REMOVED AND RETURNED TO THE CONSTRUCTION SITE IMMEDIATELY. IF EXCESSIVE AMOUNTS OF SEDIMENT ARE BEING DEPOSITED ON ROADWAY, EXTEND LENGTH OF ROCK CONSTRUCTION ENTRANCE BY 50 FOOT INCREMENTS UNTIL CONDITION IS ALLEVIATED OR INSTALL WASH RACK. WASHING THE ROADWAY OR SWEEPING THE DEPOSITS INTO ROADWAY DITCHES, SEWERS, CULVERTS, OR OTHER DRAINAGE COURSES IS NOT ACCEPTABLE.

STANDARD CONSTRUCTION DETAIL # 3-1
ROCK CONSTRUCTION ENTRANCE

NOT TO SCALE
MCPA-SOIL-EROS-1000
05/01/18

NOTES:

1. CONCRETE WASHOUTS ARE REQUIRED ON ALL CONSTRUCTION SITES INVOLVING CONCRETE AND STUCCO USE:
2. THE CONTRACTOR SHALL REQUIRE ALL CONCRETE DRIVERS TO UTILIZE THE CONCRETE WASHOUTS ONSITE.
3. WASHOUT FACILITIES SHALL BE LOCATED AT LEAST 50 YARDS AWAY FROM STORM SEWER DRAIN INLETS, GUTTERS, OPEN DITCHES, AND WATER COURSES.
4. APPROPRIATE STONE SHOULD COVER PATHS TO CONCRETE WASHOUT.
5. THE NUMBER OF CONCRETE WASHOUTS DEPENDS ON THE EXPECTED DEMAND FOR STORAGE CAPACITY. LARGE SITES WITH EXTENSIVE CONCRETE WORK SHALL BE PLACED AT MULTIPLE LOCATIONS FOR USE BY CONCRETE TRUCK DRIVERS.
6. CONCRETE WASHOUT AREAS SHALL BE IDENTIFIED BY POSTING SIGNS ONSITE.
7. CONCRETE WASHOUTS ARE TO BE INSPECTED DAILY BY THE CONTRACTOR FOR LEAKS OR TEARS IN PLASTIC LINER.
8. REMOVE AND DISPOSE OF ALL MATERIAL WHEN THE WASHOUT HAS BEEN FILLED TO 75% CAPACITY.
9. PRIOR TO ANY RAINFALL, ALL CONCRETE WASHOUTS ARE TO BE CLEANED OUT OR COVERED.
10. ONCE THE MATERIAL HAS BEEN CLEANED OUT OF THE CONCRETE WASHOUT FACILITY, THE FACILITY MUST BE INSPECTED FOR REPAIR, RECONSTRUCTION OR REPLACEMENT. ALL PLASTIC LINING SHALL BE REMOVED AND REPLACED.
11. PRE-FABRICATED OR ONSITE FABRICATED CONCRETE WASHOUTS MAY BE USED.
12. OPTIONS FOR ONSITE CONCRETE WASHOUTS:
    - A. DIG A PIT AND LINE WITH 10 MIL PLASTIC SHEETING.
    - B. CREATE AN ABOVE-GROUND STRUCTURE FROM STRAW BALES OR SANDBAGS, WITH 10 MIL PLASTIC LINING.

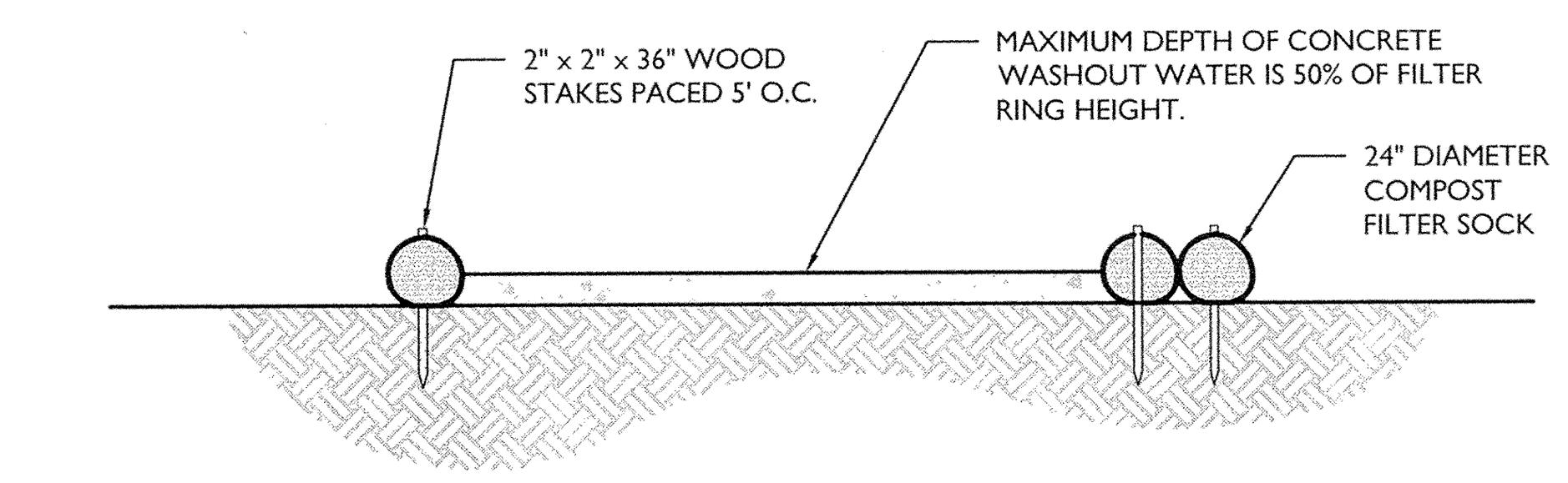

NOTES:

1. INSTALL ON FLAT GRADE FOR OPTIMUM PERFORMANCE.
2. 18" DIAMETER FILTER SOCK MAY BE STACKED ONTO DOUBLE 24" DIAMETER SOCKS IN PYRAMIDAL CONFIGURATION FOR ADDED HEIGHT.

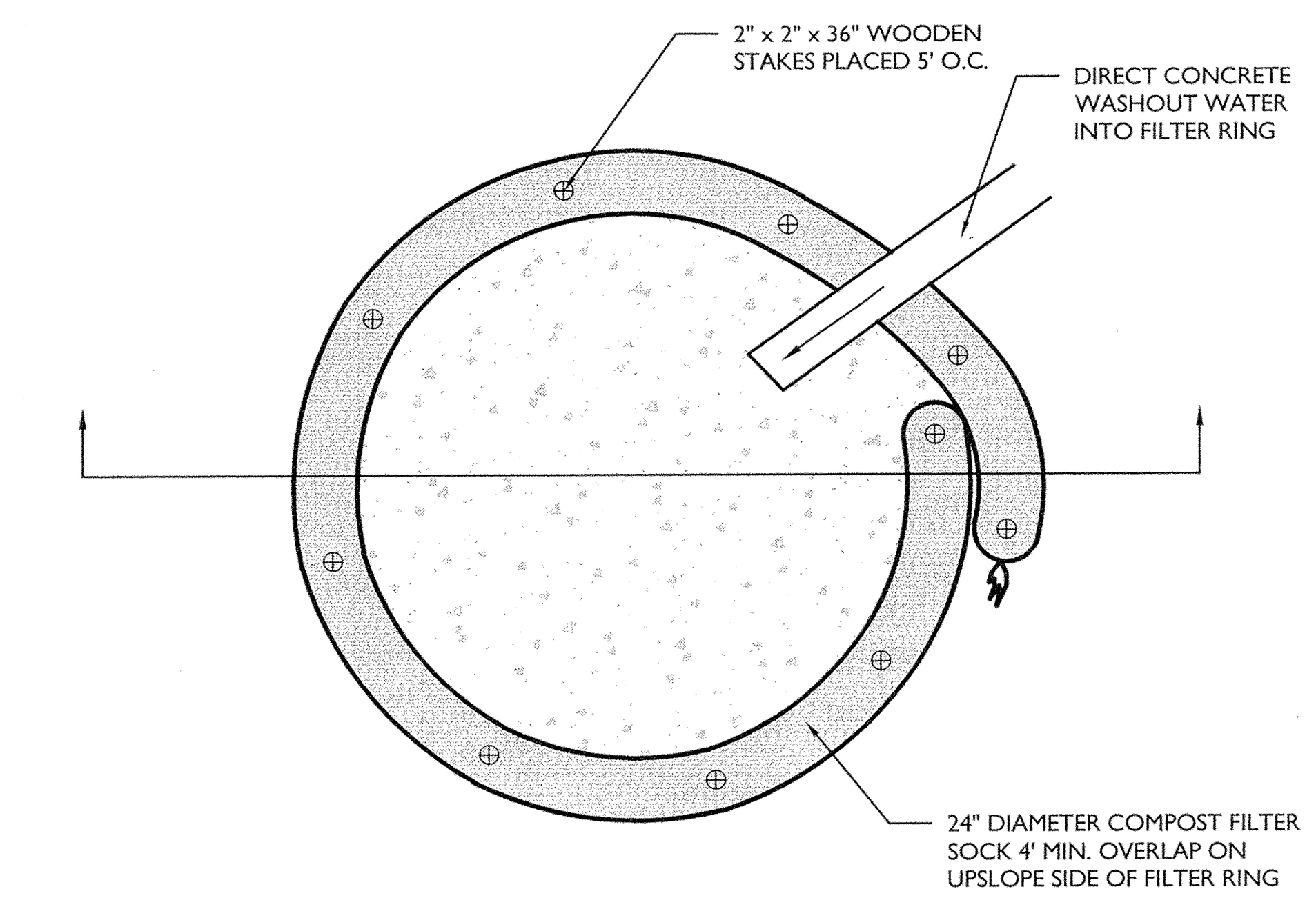

CONCRETE WASHOUT DETAIL

NOT TO SCALE
MCPA-SOIL-EROS-1800
05/01/18

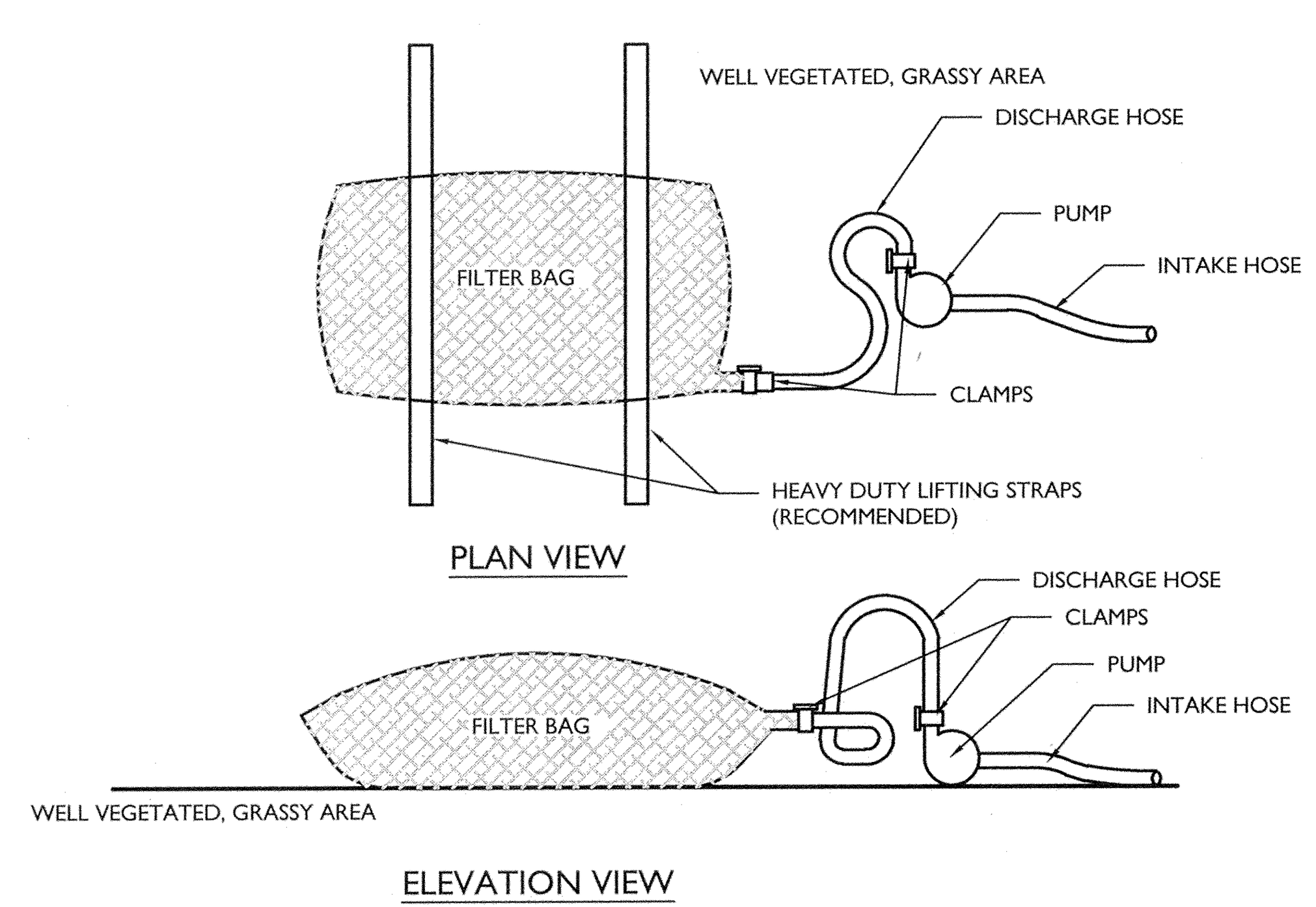

NOTES:

1. LOW VOLUME FILTER BAGS SHALL BE MADE FROM NON-WOVEN GEOTEXTILE MATERIAL SEWN WITH HIGH STRENGTH, DOUBLE STITCHED "J" TYPE SEAMS. THEY SHALL BE CAPABLE OF TRAPPING PARTICLES LARGER THAN 150 MICRONS. HIGH VOLUME FILTER BAGS SHALL BE MADE FROM WOVEN GEOTEXTILES THAT MEET THE FOLLOWING STANDARDS:

PROPERTY	TEST METHOD	MINIMUM STANDARD
AVG. WIDE WIDTH STRENGTH	ASTM D-4884	60 LB/IN
GRAB TENSILE	ASTM D-4632	205 LB
PUNCTURE	ASTM D-4833	110 LB
MULLEN BURST	ASTM D-3786	350 PSI
UV RESISTANCE	ASTM D-4355	70%
AOS % RETAINED	ASTM D-4751	80 SIEVE

2. A SUITABLE MEANS OF ACCESSING THE BAG WITH MACHINERY REQUIRED FOR DISPOSAL PURPOSES SHALL BE PROVIDED. FILTER BAGS SHALL BE REPLACED WHEN THEY BECOME 1/2 FULL OF SEDIMENT. SPARE BAGS SHALL BE KEPT AVAILABLE FOR REPLACEMENT OF THOSE THAT HAVE FAILED OR ARE FILLED. BAGS SHALL BE PLACED ON STRAPS TO FACILITATE REMOVAL UNLESS BAGS COME WITH LIFTING STRAPS ALREADY ATTACHED.
3. BAGS SHALL BE LOCATED IN WELL-VEGETATED (GRASSY) AREA, AND DISCHARGE ONTO STABLE, EROSION RESISTANT AREAS. WHERE THIS IS NOT POSSIBLE, A GEOTEXTILE UNDERLAYMENT AND FLOW PATH SHALL BE PROVIDED. BAGS MAY BE PLACED ON FILTER STONE TO INCREASE DISCHARGE CAPACITY. BAGS SHALL NOT BE PLACED ON SLOPES GREATER THAN 5%. FOR SLOPES EXCEEDING 5%, CLEAN ROCK OR OTHER NON-ERODIBLE AND NON-POLLUTING MATERIAL MAY BE PLACED UNDER THE BAG TO REDUCE SLOPE STEEPNESS.
4. NO DOWNSLOPE SEDIMENT BARRIER IS REQUIRED FOR MOST INSTALLATIONS. COMPOST BERM OR COMPOST FILTER SOCK SHALL BE INSTALLED BELOW BAGS LOCATED IN HQ OR EV WATERSHEDS, WITHIN 50 FEET OF ANY RECEIVING SURFACE WATER OR WHERE GRASSY AREA IS NOT AVAILABLE.
5. THE PUMP DISCHARGE HOSE SHALL BE INSERTED INTO THE BAGS IN THE MANNER SPECIFIED BY THE MANUFACTURER AND SECURELY CLAMPED. A PIECE OF PVC PIPE IS RECOMMENDED FOR THIS PURPOSE.
6. THE PUMPING RATE SHALL BE NO GREATER THAN 750 GPM OR 1/2 THE MAXIMUM SPECIFIED BY THE MANUFACTURER, WHICHEVER IS LESS. PUMP INTAKES SHALL BE FLOATING AND SCREENED.
7. FILTER BAGS SHALL BE INSPECTED DAILY. IF ANY PROBLEM IS DETECTED, PUMPING SHALL CEASE IMMEDIATELY AND NOT RESUME UNTIL THE PROBLEM IS CORRECTED.

STANDARD CONSTRUCTION DETAIL # 3-16
PUMPED WATER FILTER BAG

NOT TO SCALE
MCPA-SOIL-EROS-1400
05/01/18

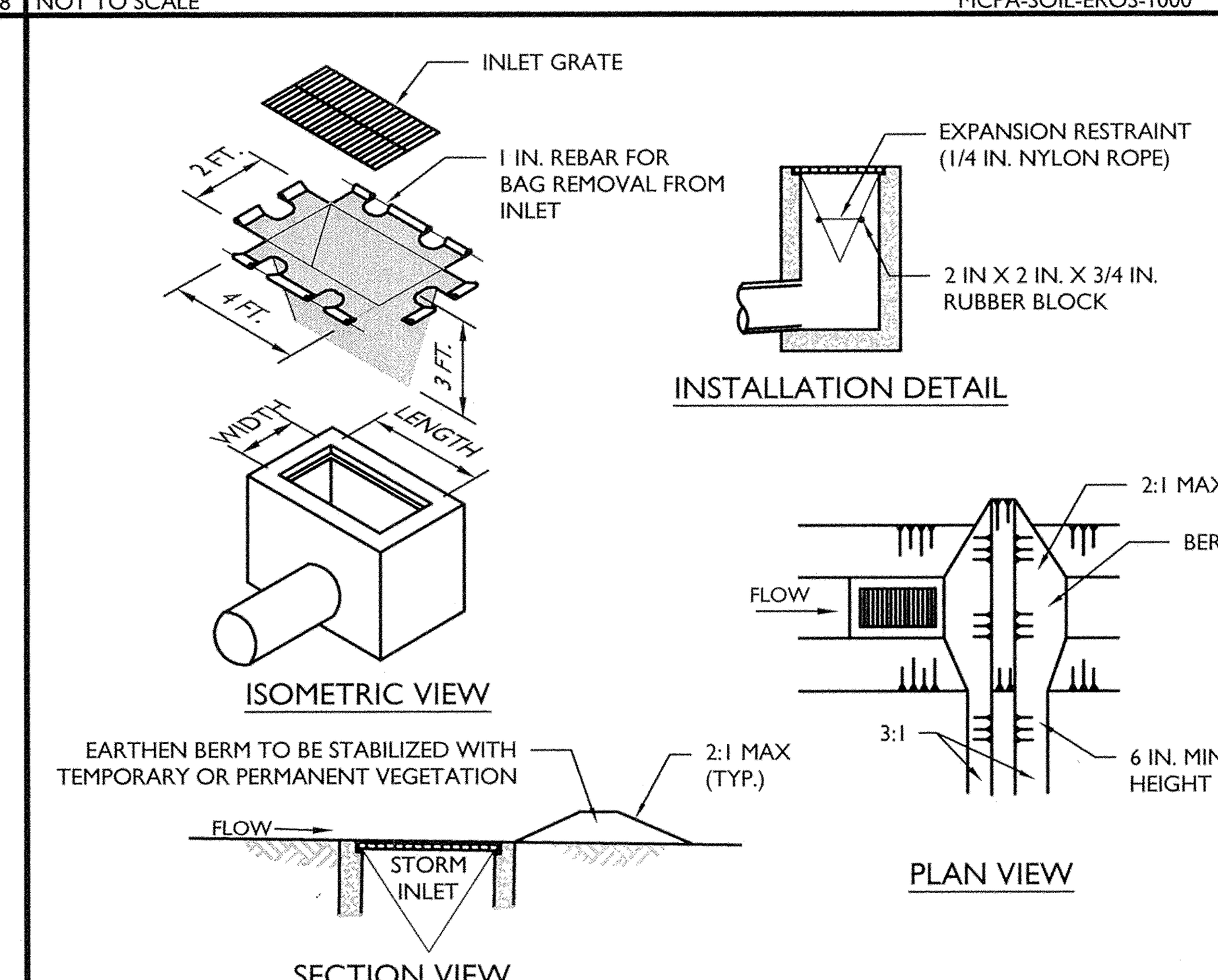

NOTES:

1. MAXIMUM DRAINAGE AREA = 1/2 ACRE.
2. INLET PROTECTION SHALL NOT BE REQUIRED FOR INLET TRIBUTARY TO SEDIMENT BASIN OR TRAP. BERMS SHALL BE REQUIRED FOR ALL INSTALLATIONS.
3. ROLLED EARTHEN BERM IN ROADWAY SHALL BE MAINTAINED UNTIL ROADWAY IS STONED. ROAD SUBBASE BERM ON ROADWAY SHALL BE MAINTAINED UNTIL ROADWAY IS PAVED. EARTHEN BERM IN CHANNEL SHALL BE MAINTAINED UNTIL PERMANENT STABILIZATION IS COMPLETED OR REMAIN PERMANENTLY.
4. AT A MINIMUM, THE FABRIC SHALL HAVE A MINIMUM GRAB TENSILE STRENGTH OF 120 LBS., A MINIMUM BURST STRENGTH OF 200 PSI, AND A MINIMUM TRAPEZOIDAL TEAR STRENGTH OF 50 LBS. FILTER BAGS SHALL BE CAPABLE OF TRAPPING ALL PARTICLES NOT PASSING A NO. 40 SIEVE.
5. INLET FILTER BAGS SHALL BE INSPECTED ON A WEEKLY BASIS AND AFTER EACH RUNOFF EVENT. BAGS SHALL BE EMPTIED AND RINSED OR REPLACED WHEN HALF FULL OR WHEN FLOW CAPACITY HAS BEEN REDUCED SO AS TO CAUSE FLOODING OR BYPASSING OF THE INLET. DAMAGED OR CLOGGED BAGS SHALL BE REPLACED. A SUPPLY SHALL BE MAINTAINED ON SITE FOR REPLACEMENT OF BAGS. ALL NEEDED REPAIRS SHALL BE INITIATED IMMEDIATELY AFTER THE INSPECTION. DISPOSE ACCUMULATED SEDIMENT AS WELL AS ALL USED BAGS ACCORDING TO THE PLAN NOTES.
6. DO NOT USE ON MAJOR PAVED ROADWAYS WHERE PONDING MAY CAUSE TRAFFIC HAZARDS.

STANDARD CONSTRUCTION DETAIL # 4-16
FILTER BAG INLET PROTECTION - TYPE M INLET

NOT TO SCALE
MCPA-SOIL-EROS-2401
05/01/18

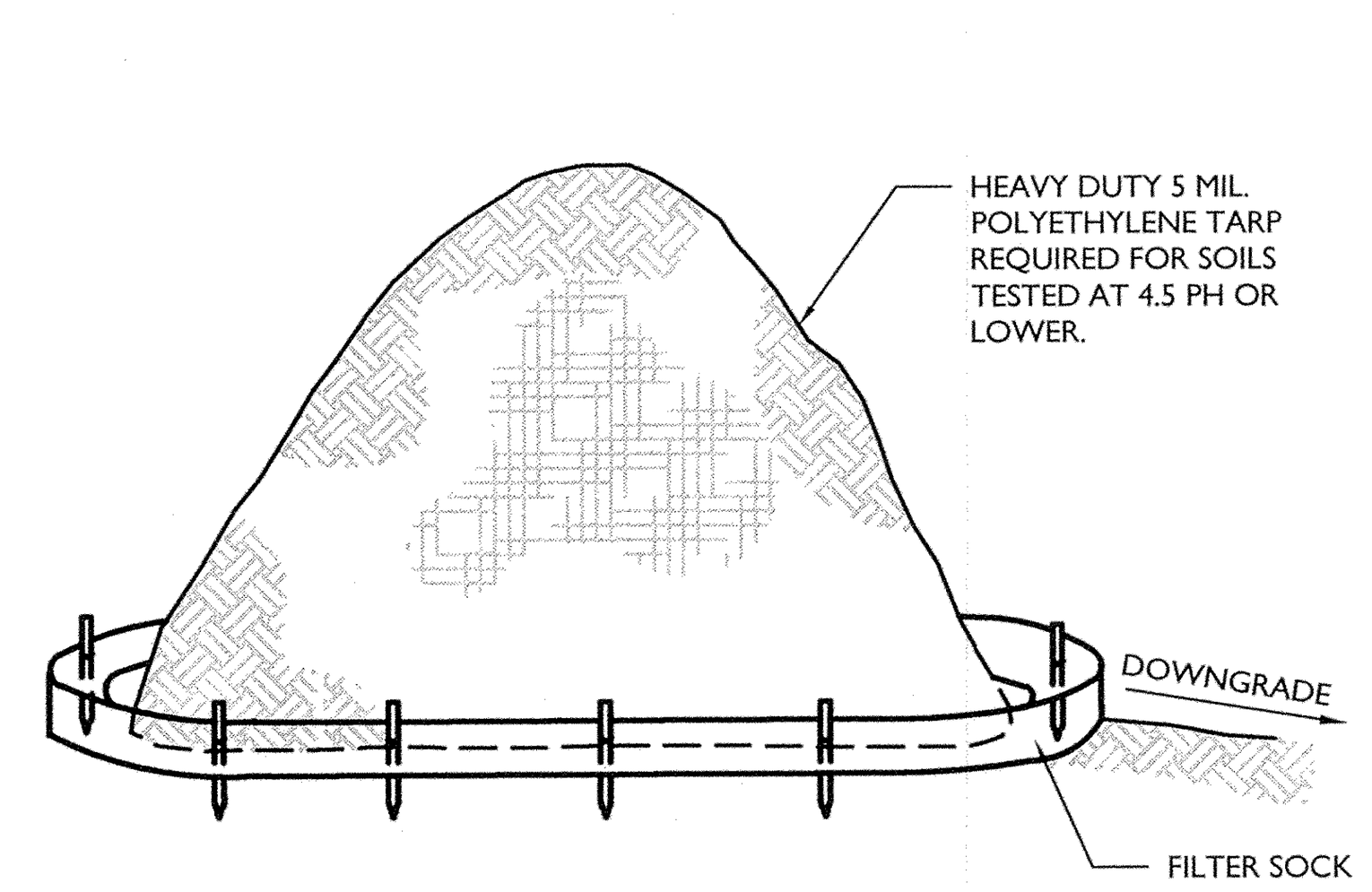

NOTES:

1. ALL STOCKPILES SHALL NOT TO BE LOCATED WITHIN 50 FEET OF A FLOODPLAIN, SLOPE, ROADWAY OR DRAINAGE FACILITY.

TOPSOIL STOCKPILE
WITH FILTER SOCK DETAIL

NOT TO SCALE
MCPA-SOIL-EROS-2201
05/01/18

MASER CONSULTING P.A.
Customer Loyalty *through* Client Satisfaction
www.maserconsulting.com
Engineers ■ Planners ■ Surveyors
Landscape Architects ■ Environmental Scientists

Office Locations:

Red Bank, NJ	Lehigh Valley, PA
Clinton, NJ	Exton, PA
Hamilton, NJ	Philadelphia, PA
Egg Harbor, NJ	Pittsburgh, PA
Montvale, NJ	Tampa, FL
Mt. Arlington, NJ	Orlando, FL
Mt. Laurel, NJ	Miami, FL
Albany, NY	Jacksonville, FL
New Windsor, NY	Sterling, VA
Westchester, NY	Norfolk, VA
Charlotte, NC	Albuquerque, NM
Raleigh, NC	Columbia, MD

Copyright © 2018. Maser Consulting. All Rights Reserved. This drawing and all the information contained herein is authorized for use only by the party for whom the services were contracted or to whom it is certified. This drawing may not be copied, reused, disclosed, distributed or relied upon for any other purpose without the express written consent of Maser Consulting, P.A.

811 Know what's below. Call before you dig.
PROTECT YOURSELF
ALL STATES REQUIRE NOTIFICATION OF EXCAVATORS, DESIGNERS, OR ANY PERSON PREPARING TO DISTURB THE EARTH'S SURFACE ANYWHERE IN ANY STATE
20181273405
FOR STATE SPECIFIC DIRECT PHONE NUMBERS VISIT: WWW.CALL811.COM

REV	DATE	DRAWN BY	DESCRIPTION
1	7/18/18	MD	REVISED PER COUNTY PLANNING COMMISSION COMMENTS AT 7/18/18 MTG

COMMONWEALTH OF PENNSYLVANIA
REGISTERED PROFESSIONAL
C. RICHARD ROSEBERRY
ENGINEER No. 46162

C. RICHARD ROSEBERRY
PENNSYLVANIA REGISTERED PROFESSIONAL ENGINEER - LICENSE NUMBER: PE46162-R

FINAL
LAND DEVELOPMENT
PLAN
FOR
MERCER COUNTY STATE BANK PROPOSED BANK SITE
PARCEL ID 430-S2-A21D-0000
549 SOUTH MAIN STREET
BOROUGH OF HARRISVILLE
BUTLER COUNTY
PENNSYLVANIA

PITTSBURGH OFFICE
North Shore Place II
322 Northshore Drive,
Building 1B, Suite 200
Pittsburgh, PA 15212
Phone: 877.627.3772

SCALE:	DATE:	DRAWN BY:	CHECKED BY:
AS SHOWN	07/10/18	MD	CRR
PROJECT NUMBER: 18001614A	DRAWING NAME: C-SESC		

SHEET TITLE:
SOIL EROSION & SEDIMENT CONTROL DETAILS

SHEET NUMBER:
9 of 11

PLAN BOOK	PAGE
373	31

2018\18001614A\Engineering\Site Plans\C-SESC.dwg\C-09-E&S DETAILS (2) By: MDEJESUS

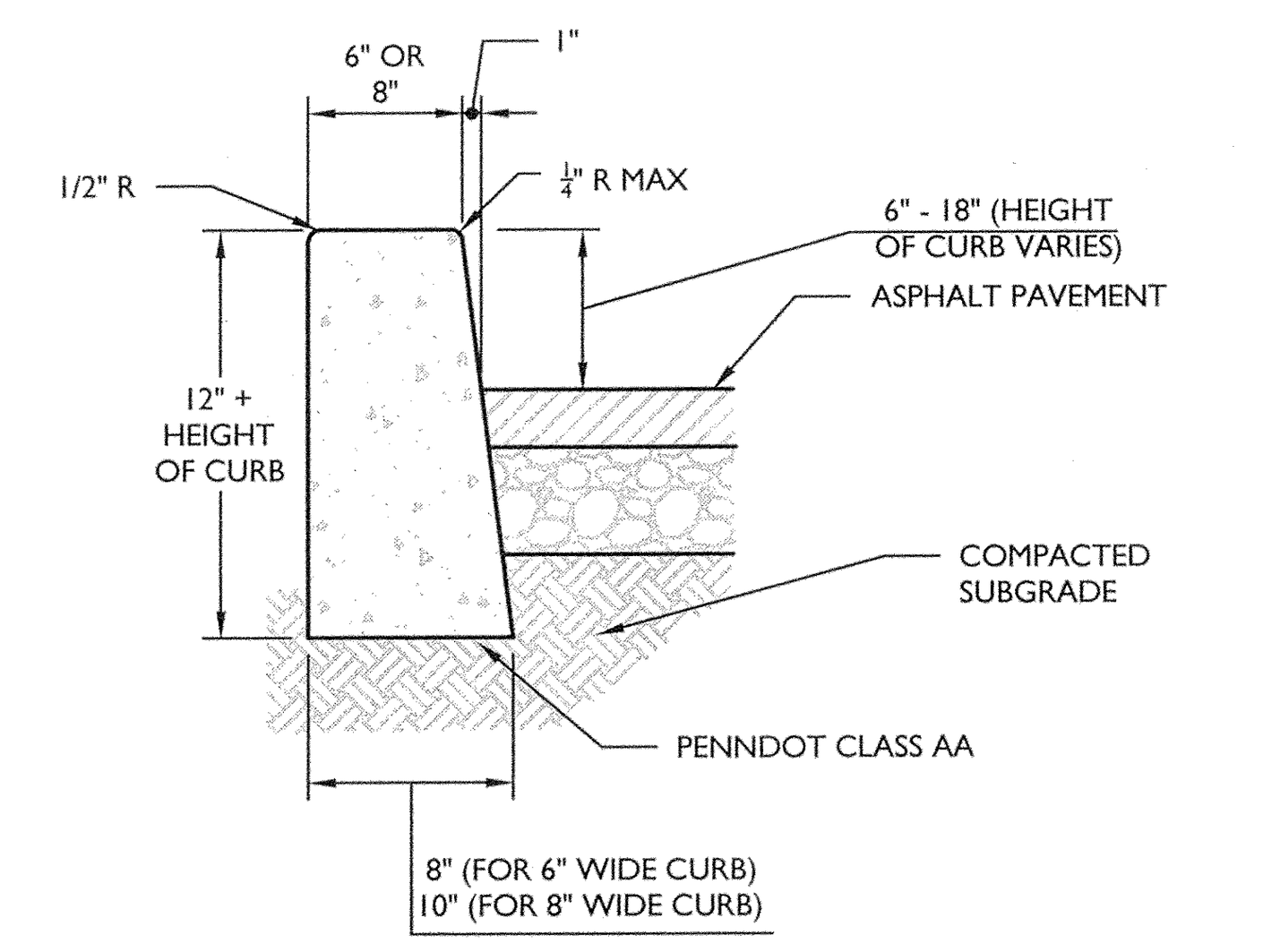

NOTES:

1. PREFORMED BITUMINOUS FIBER TRAVERSE JOINTS, 1/2" THICK AT 20' MAX. INTERVALS ALONG THE CURB.
2. PROVIDE CONTRACTION JOINTS (2" DEEP X 3/16" WIDE) 4'-0" MIN TO 10'-0" MAX INTERVALS.

CONCRETE CURB (ASPHALT PAVEMENT) DETAIL

NOT TO SCALE — MCPA-SITE-CURB-1000 — MOD: 07/10/18 05/01/18

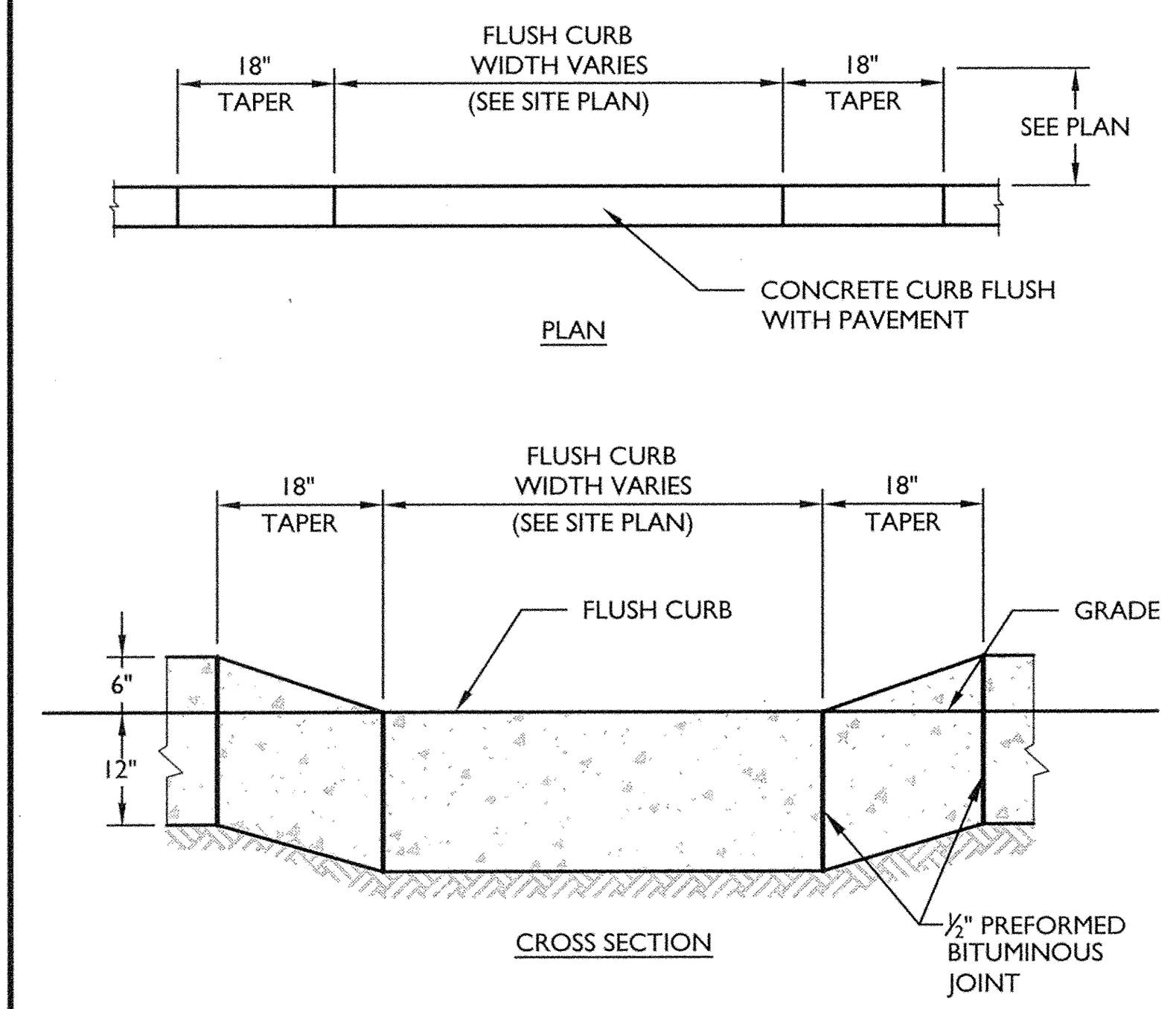

CONCRETE FLUSH CURB DETAIL

NOT TO SCALE — MCPA-SITE-CURB-1500 — 05/01/18

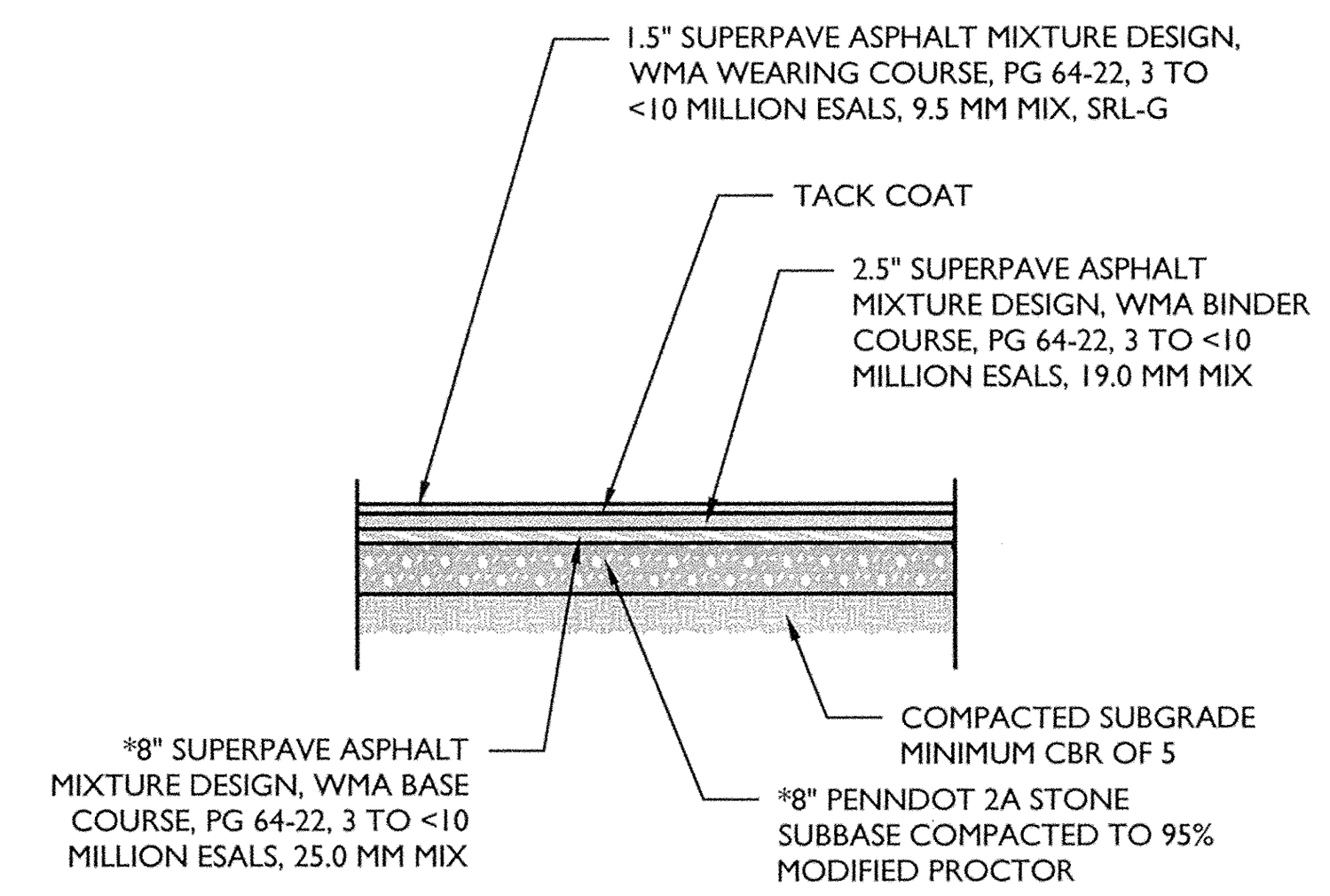

NOTE:
PAVEMENT SECTION BASED ON EXISTING PAVEMENT HISTORY. NEW PAVEMENT TO MATCH EXISTING.

*MATCH EXISTING DEPTH IF GREATER

PENNDOT R.O.W. DETAIL ASPHALT PAVEMENT SECTION

NOT TO SCALE — MCPA-SITE-PVMT-1300 — 05/01/18

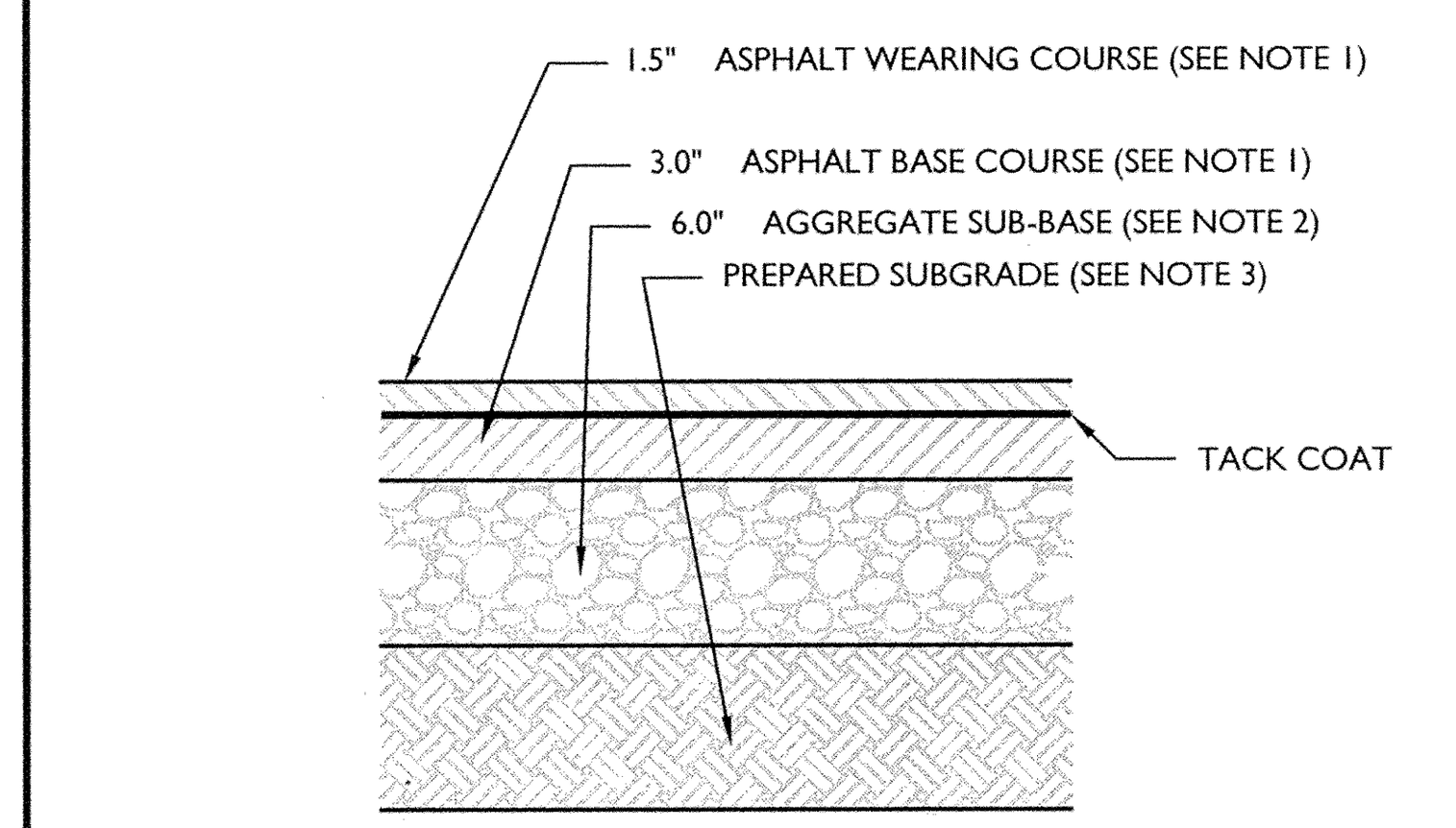

NOTES:

1. PENNDOT APPROVED ASPHALT MIX DESIGN
2. AGGREGATE BASE TO BE PENNDOT TYPE 2A CONFORMING TO PENNDOT PUBLICATIONS 408
3. SUBGRADE TO BE COMPACTED TO A MINIMUM OF 95 PERCENT OF THE MAXIMUM DRY DENSITY, AS DETERMINED BY THE MODIFIED PROCTOR TEST, ASTM D 1557, AND SHALL CONSIST OF LOAD-BEARING FILL OR EXISTING STRATUM A MATERIALS CAPABLE OF ACHIEVING A CBR VALUE OF 5. THE MOISTURE CONTENT OF THE MATERIAL SHOULD ALSO BE MAINTAINED WITHIN +/- 2 PERCENT OF THE OPTIMUM MOISTURE CONTENT.

LIGHT-DUTY PAVEMENT DETAIL

NOT TO SCALE — MCPA-SITE-PVMT-1000 — MOD: 07/10/18 05/01/18

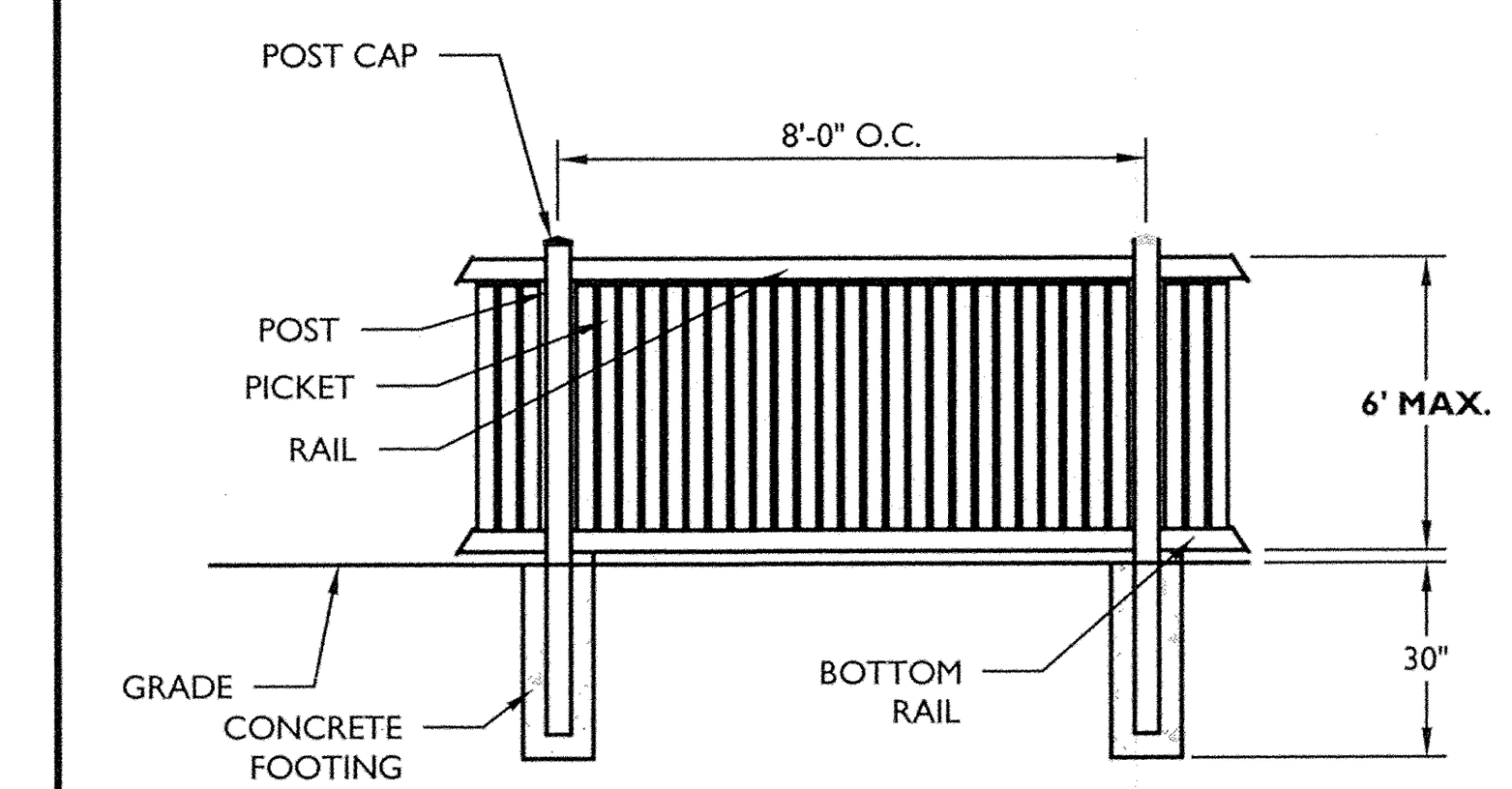

NOTES:

1. FOOTING WIDTH TO BE 2 X POST WIDTH, MINIMUM 30" DEPTH, CLASS "A" CONCRETE.
2. FENCE COLOR AS SPECIFIED BY OWNER.
3. SHOP DRAWINGS SIGNED BY A LICENSED PENNSYLVANIA ENGINEER TO BE REVIEWED AND APPROVED.

VINYL FENCE DETAIL

NOT TO SCALE — MCPA-SITE-FNCE-1300 — MOD: 07/10/18 05/01/18

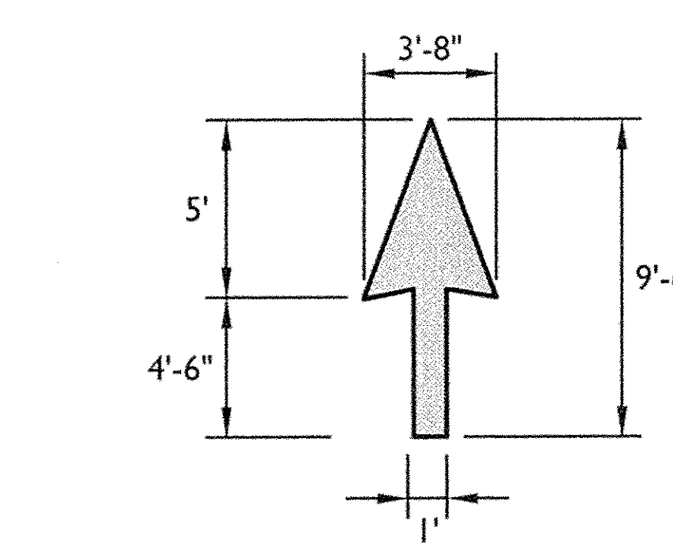

WHITE STRAIGHT PAVEMENT ARROW DETAIL

NOT TO SCALE — MCPA-SITE-MRKG-1200 — 05/01/18

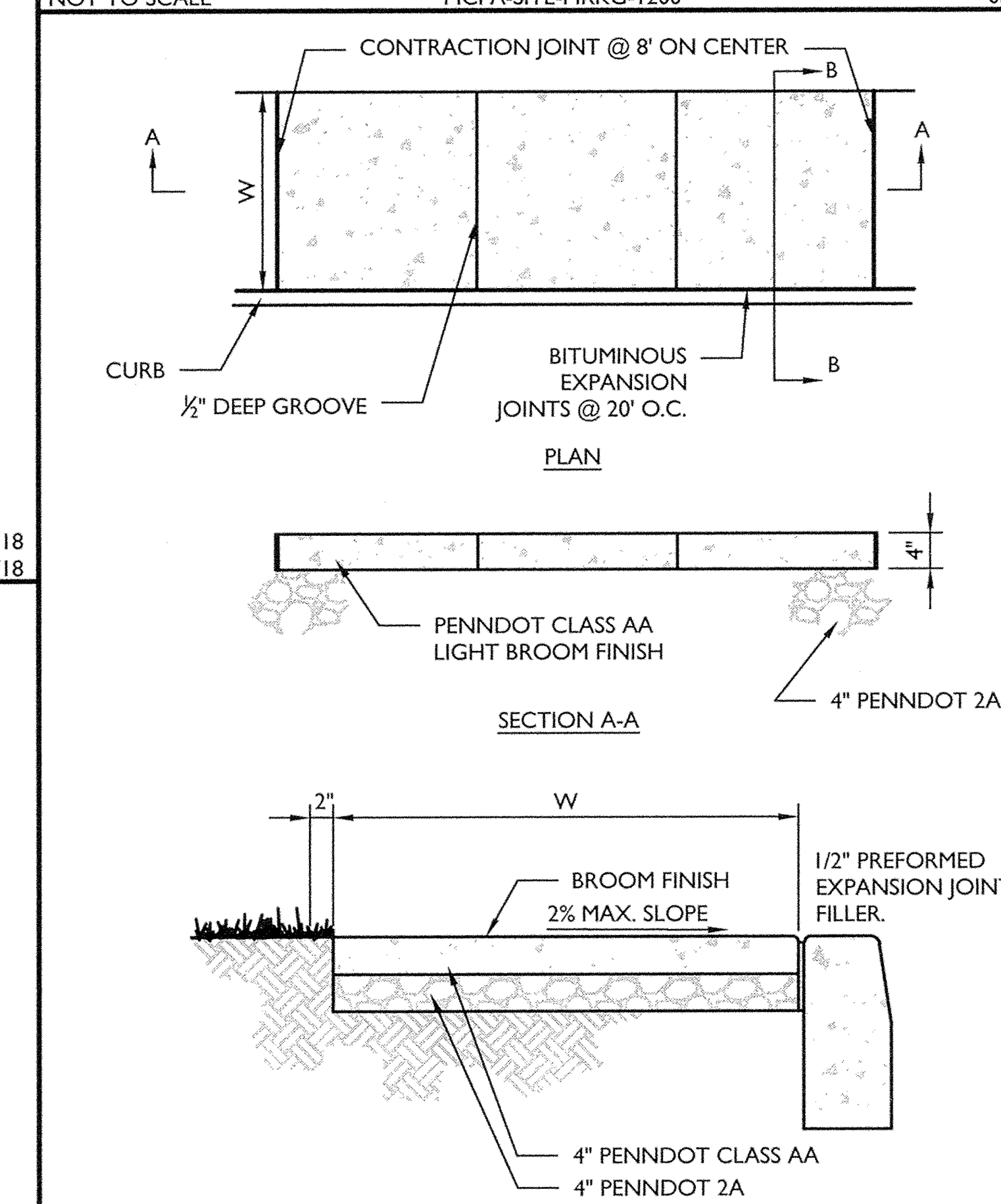

NOTES:

1. ½" EXPANSION JOINT FILLER INSTALLED BETWEEN THE CURB AND CONCRETE SIDEWALK AT 10' MAXIMUM SPACING, RECESS TO ¼" FROM THE TOP OF SIDEWALK.
2. ½" CONTRACTION JOINTS INSTALLED AT AN INTERVAL 24 TO 30 TIMES THE THICKNESS OF THE SLAB, TO A DEPTH OF ¼ OF THE THICKNESS OF THE SLAB, RECESS TO ¼" FROM THE TOP OF SIDEWALK, FOR THE FULL WIDTH OF THE SIDEWALK. SCORE A ¼" GROOVED JOINT HALF WAY BETWEEN THE CONTRACTION JOINTS.
3. JOINT FILLER SHALL CONFORM TO AASHTO M-33. SURFACE OF CONCRETE SHALL BE BROOM FINISH. ROUND EDGES USING AN EDGING TOOL WITH A ¼" RADIUS.
4. CONCRETE SIDEWALK SHALL BE CONSTRUCTED PER THE LATEST ADA REQUIREMENTS.

CONCRETE SIDEWALK (NEXT TO CURB) DETAIL

NOT TO SCALE — MCPA-SITE-PVMT-1900 — 05/01/18

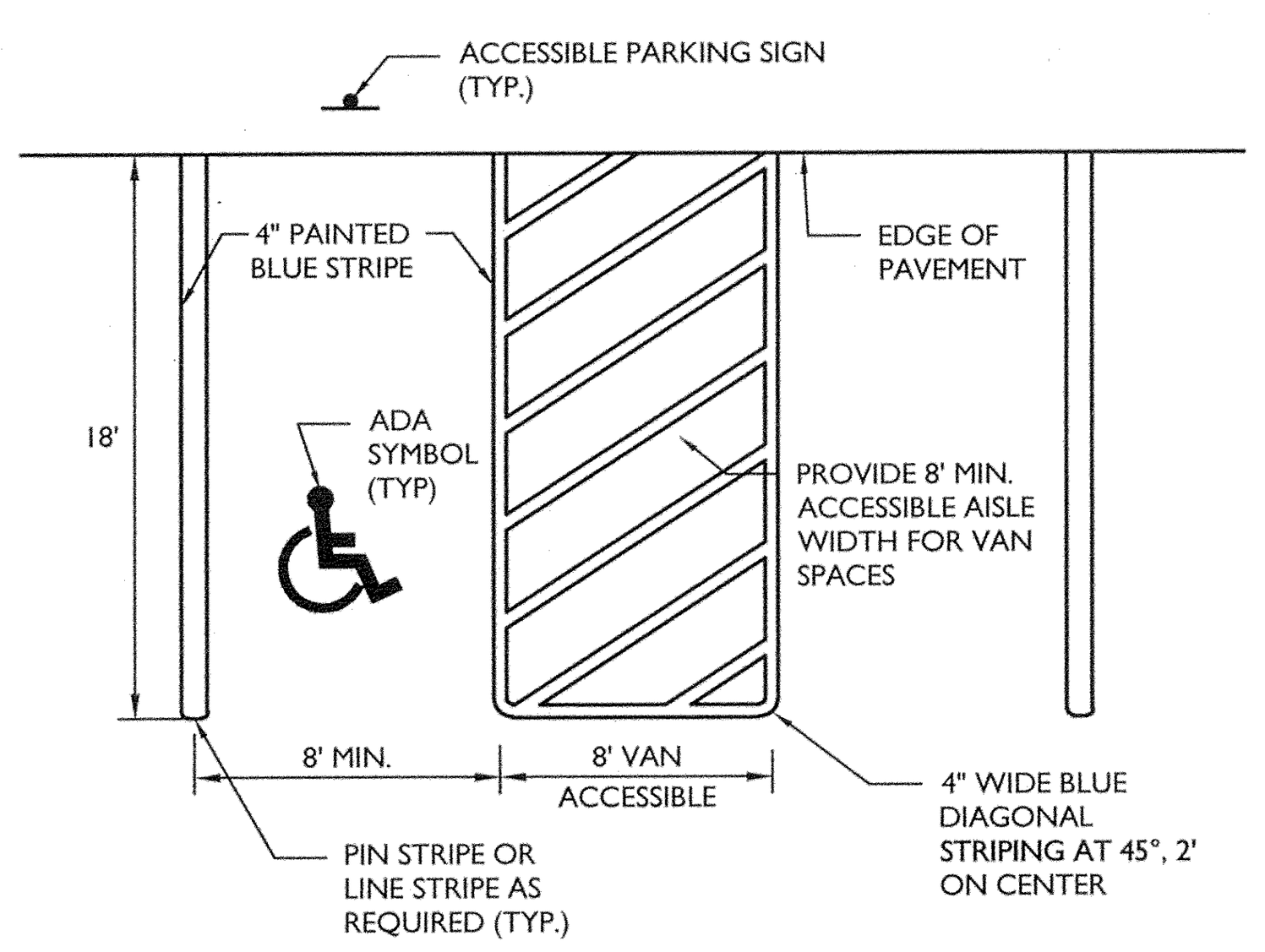

ACCESSIBLE PARKING STALL DETAIL

NOT TO SCALE — MCPA-SITE-MRKG-1600 — 05/01/18

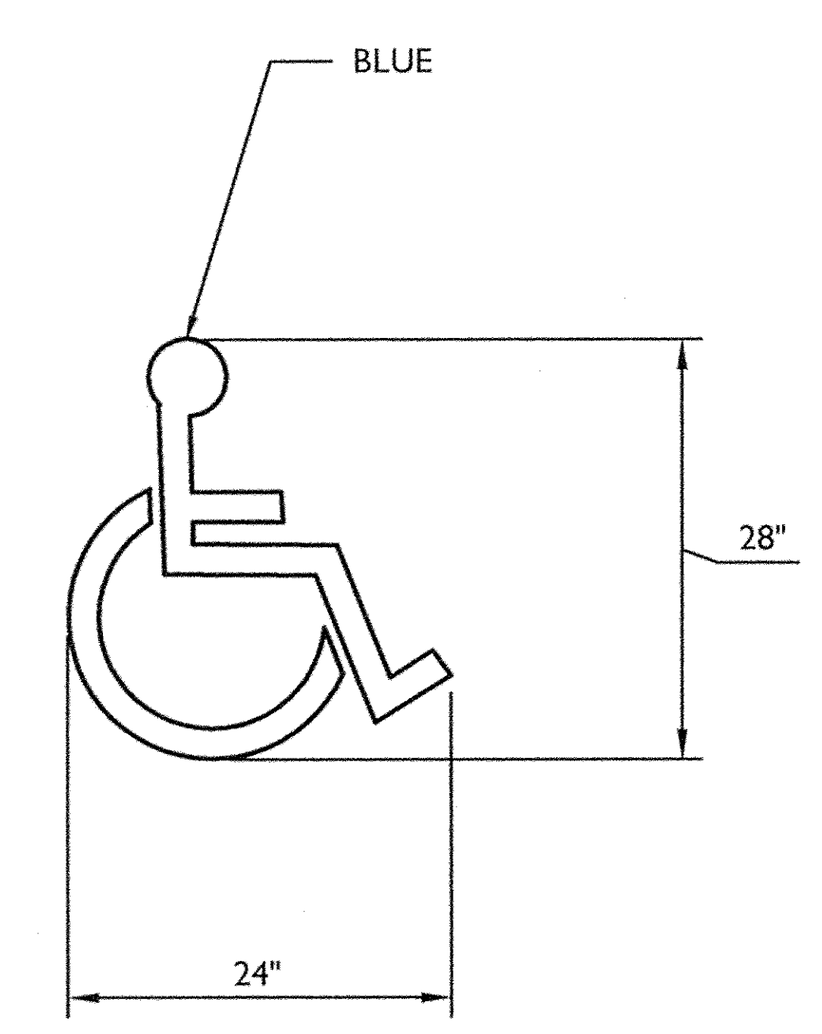

STROKE WIDTH: MINIMUM/STANDARD = 3"

ADA SYMBOL DETAIL

NOT TO SCALE — MCPA-SITE-MRKG-1800 — 05/01/18

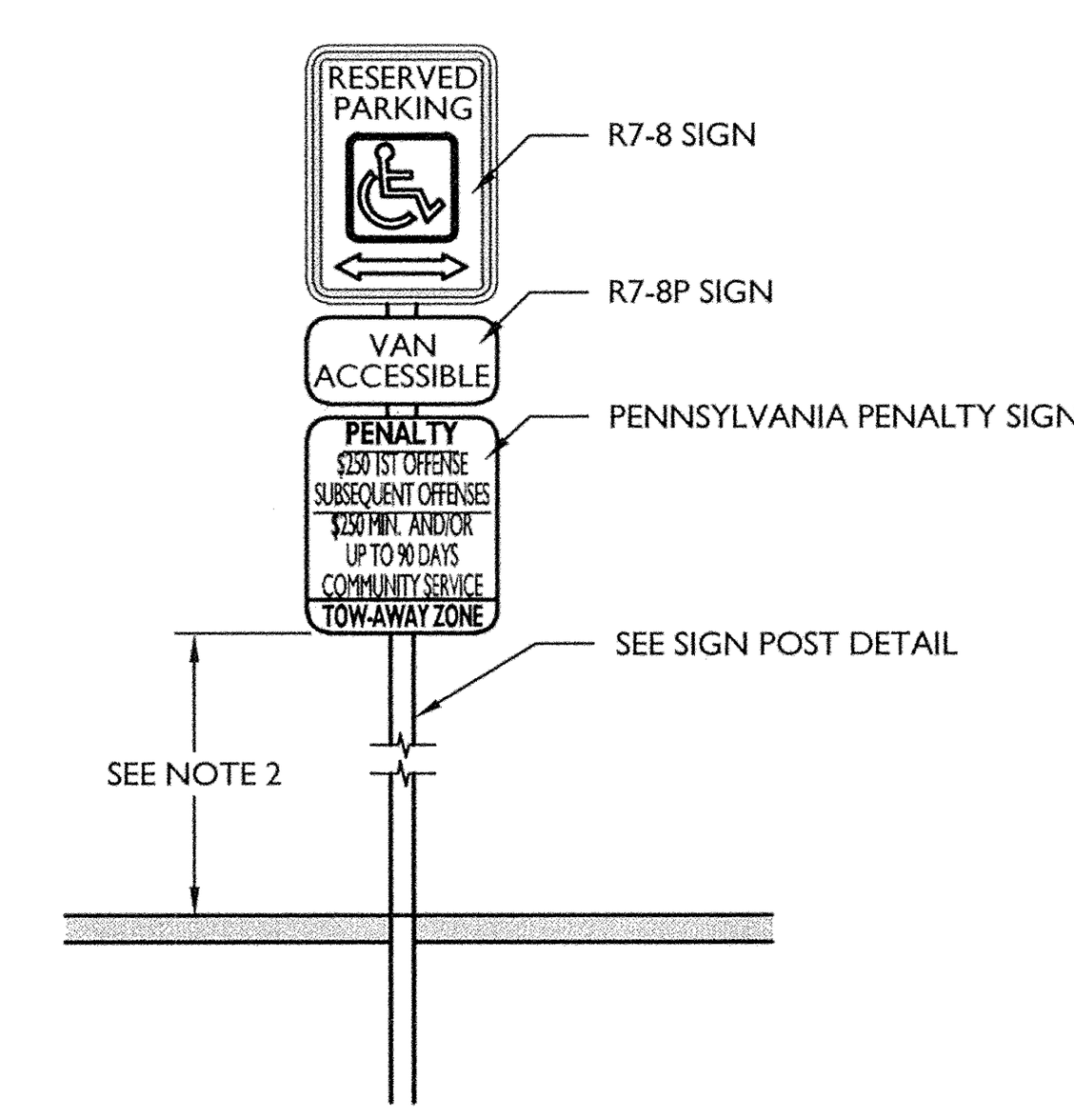

NOTES:

1. INSTALL SIGN WHERE NOTED ON PLAN.
2. THE BOTTOM OF THE LOWEST SIGN SHALL BE MOUNTED 60" ABOVE THE PARKING LOT OR SIDEWALK SURFACE WHEN THE SIGN IS PARALLEL TO THE SIDEWALK AND 72" ABOVE THE PARKING LOT OR SIDEWALK WHEN THE SIGN IS PERPENDICULAR TO THE SIDEWALK.

ACCESSIBLE PARKING SIGN DETAIL

NOT TO SCALE — MCPA-SITE-MRKG-1900 — MOD: 07/10/18 05/01/18

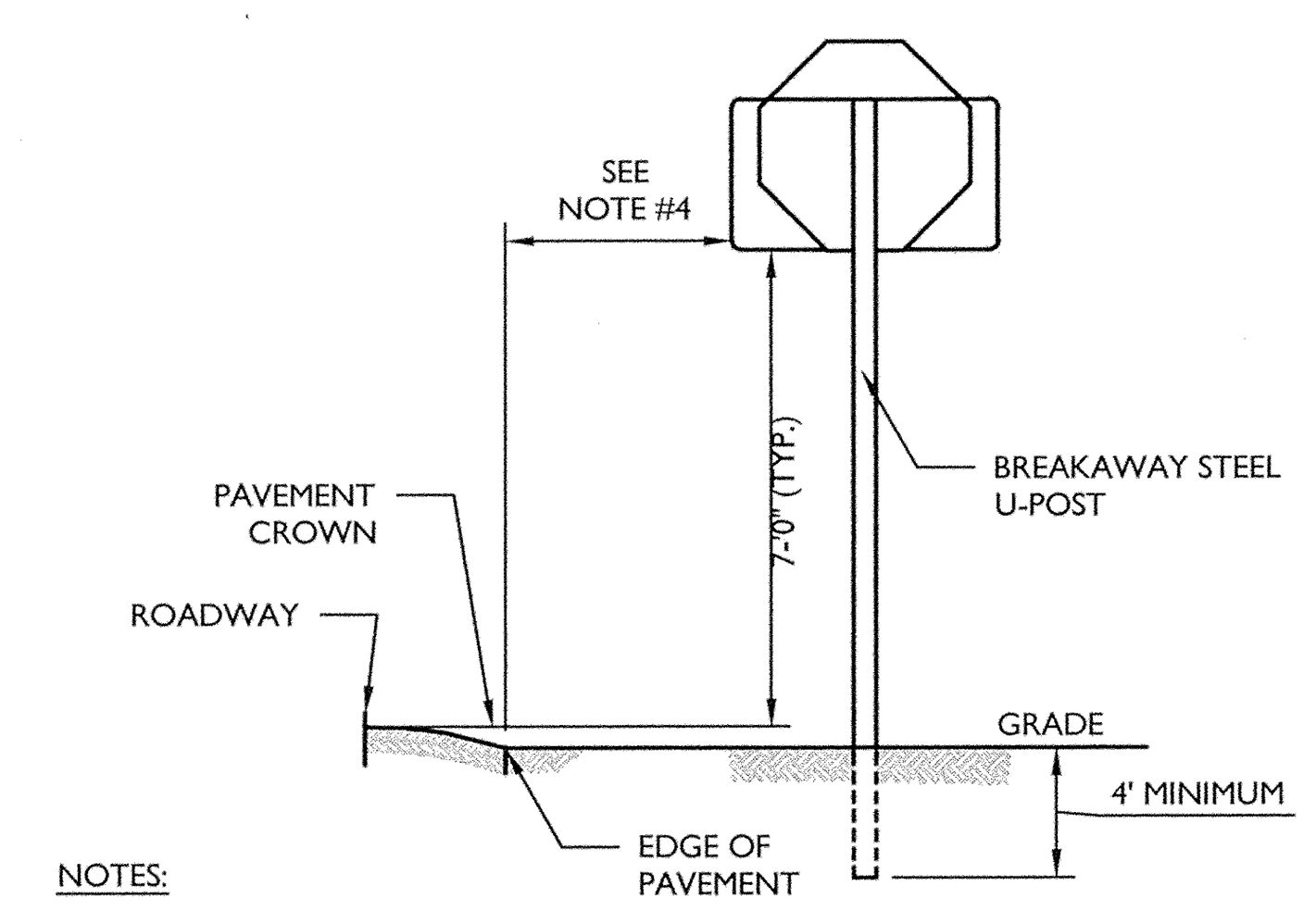

NOTES:

1. ALL POSTS SHALL BE OF ADEQUATE LENGTH TO MEET THE REQUIREMENTS FOR ERECTION, AS STATED IN THE CURRENT MANUAL ON "UNIFORM TRAFFIC CONTROL DEVICES" FOR STREETS AND HIGHWAYS.
2. ALL POSTS SHALL BE EMBEDDED 4' MINIMUM.
3. ALL POSTS TO BE BREAKAWAY STEEL U-POSTS IN CONFORMANCE WITH CURRENT ASTM SPECIFICATION A123 AND PADOT STANDARDS.
4. IN AREAS WITHOUT CURBING, THE OUTER EDGE OF SIGN TO BE 2'-0" MINIMUM TO 12'-0" MAXIMUM FROM EDGE OF CURB, AS DIRECTED.

SINGLE POST SIGN MOUNTING DETAIL

NOT TO SCALE — MCPA-SITE-MRKG-2001 — MOD: 07/10/18 05/01/18

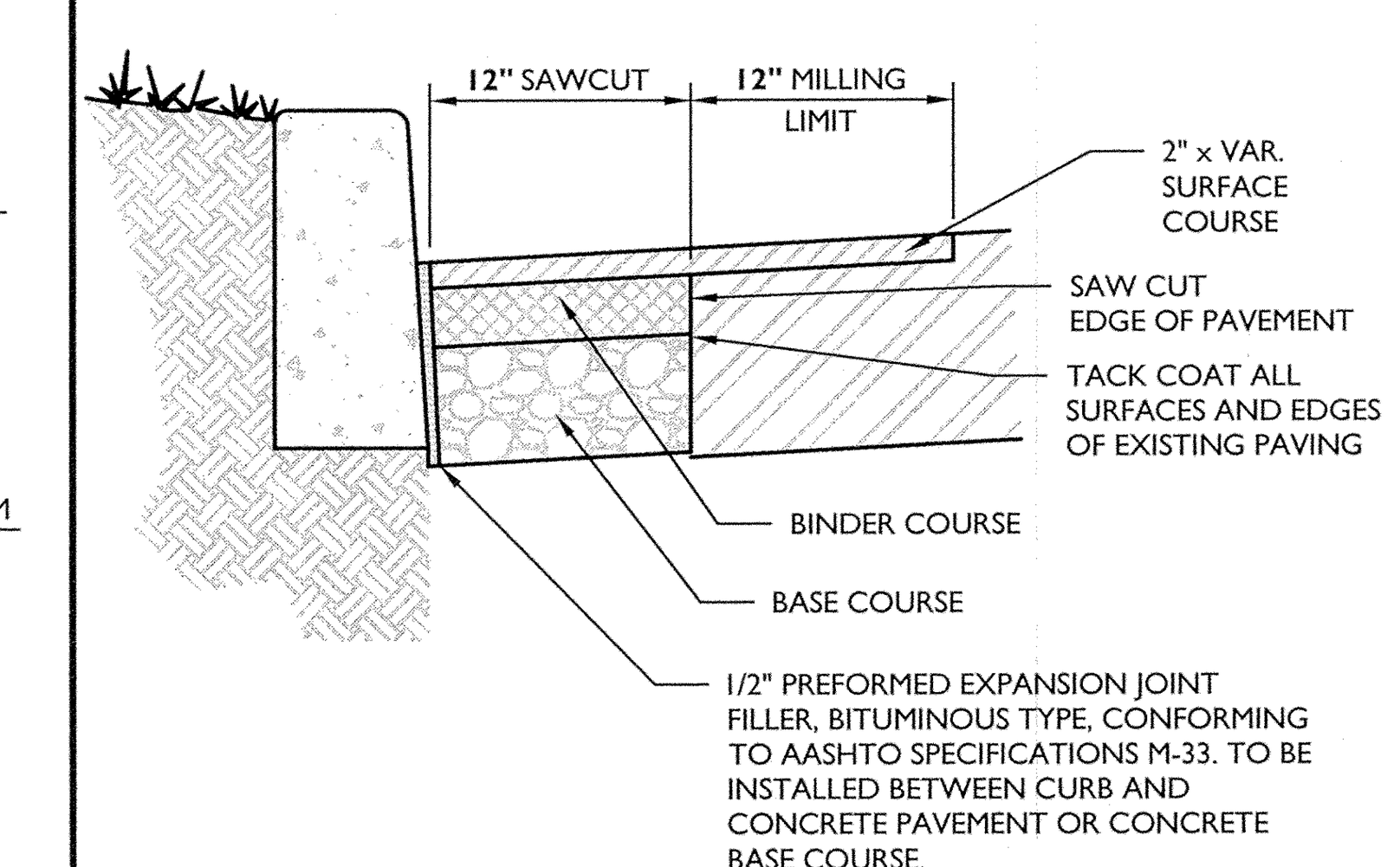

SAWCUT AND PAVEMENT RESTORATION DETAIL

NOT TO SCALE — MCPA-SITE-PVMT-2600 — 05/01/18

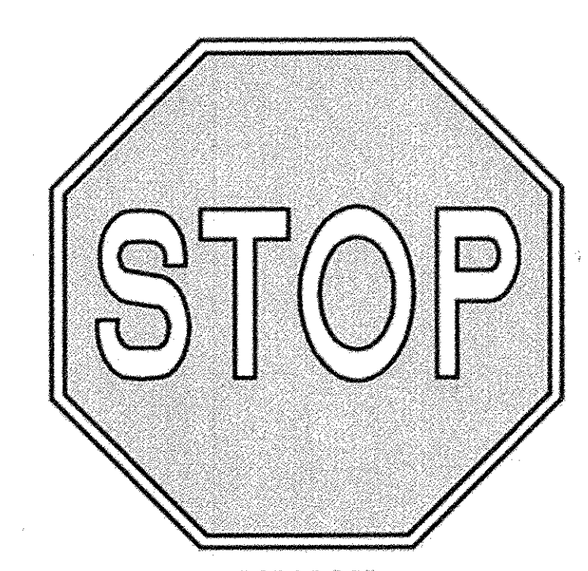

30" X 30"

R1-1 SIGN DETAIL

NOT TO SCALE — MCNJ-SITE-SIGN-1000 — 05/01/17



36" x 12"

R6-1L SIGN DETAIL

NOT TO SCALE — MCNJ-SITE-SIGN-1500 — 05/01/17

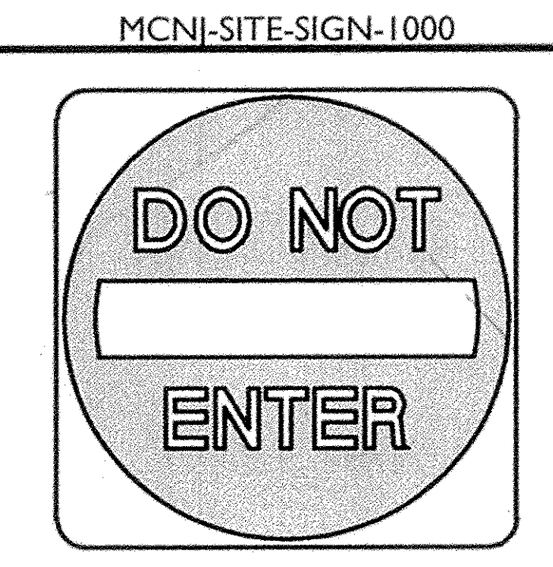

30" x 30"

R5-1 SIGN DETAIL

NOT TO SCALE — MCNJ-SITE-SIGN-1400 — 05/01/17

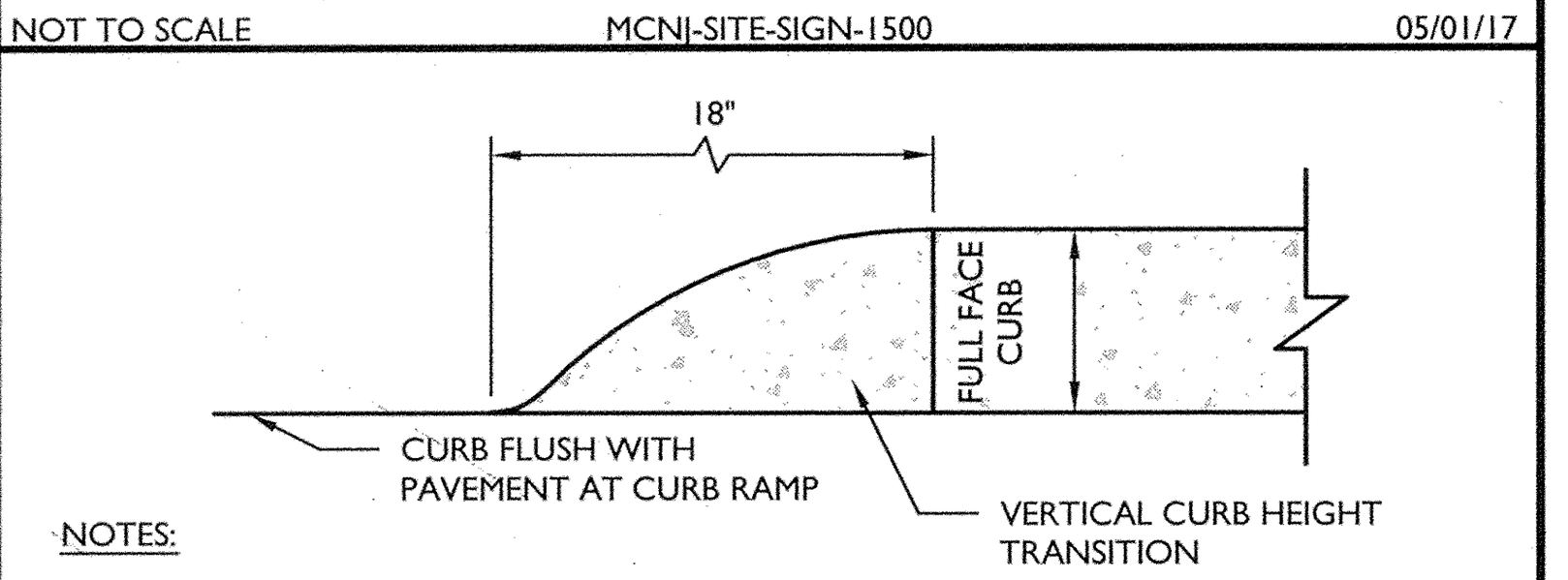

NOTES:

1. TO BE UTILIZED WHEN OPTIONAL CONCRETE SIDE FLARE IS NOT SHOWN ON PLAN.

CURB RAMP CURB TAPER DETAIL

NOT TO SCALE — MCNJ-SITE-HADA-2301 — 05/01/17

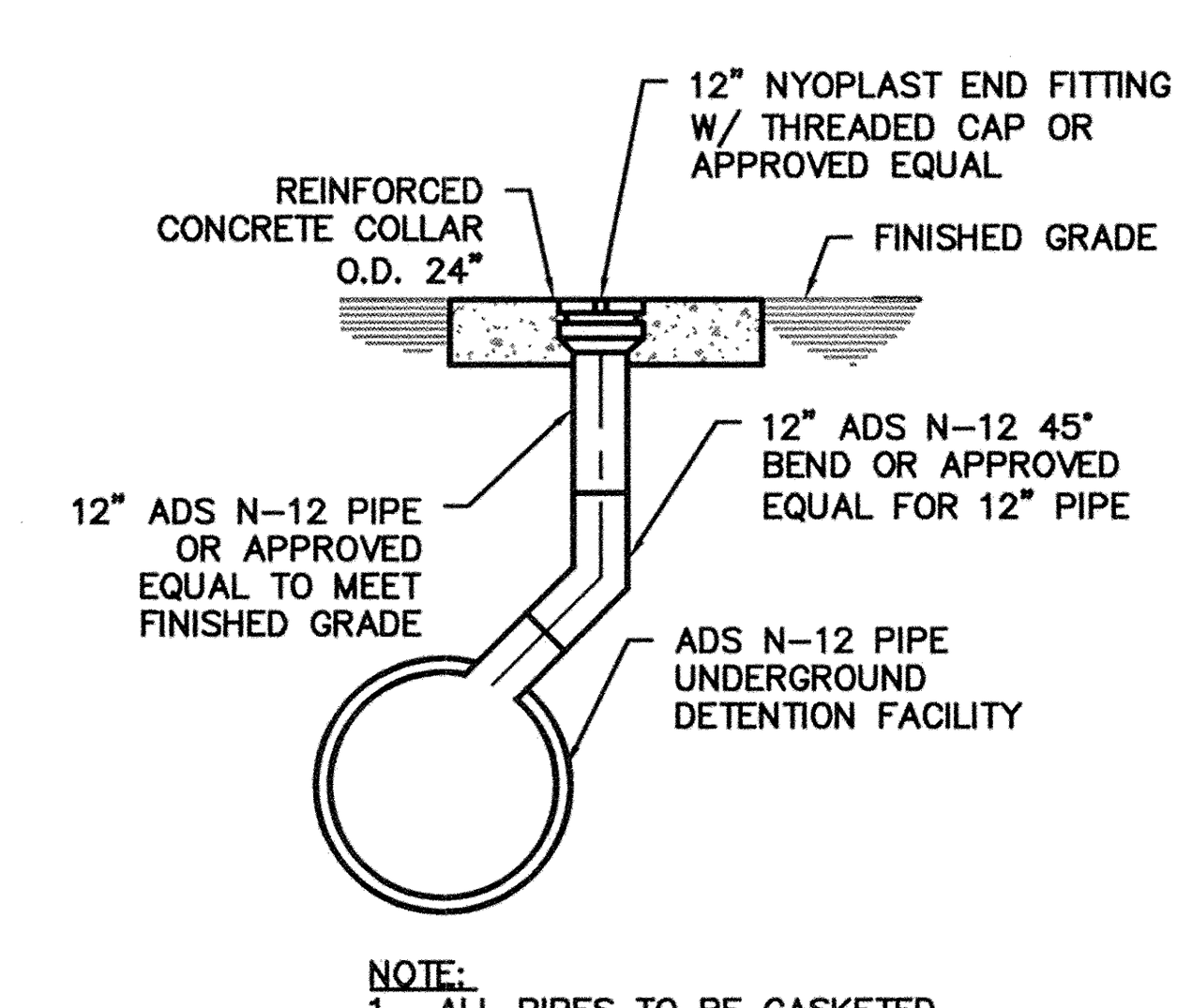

NOTE:
1. ALL PIPES TO BE GASKETED

STORM WATER CLEANOUT DETAIL

NOT TO SCALE

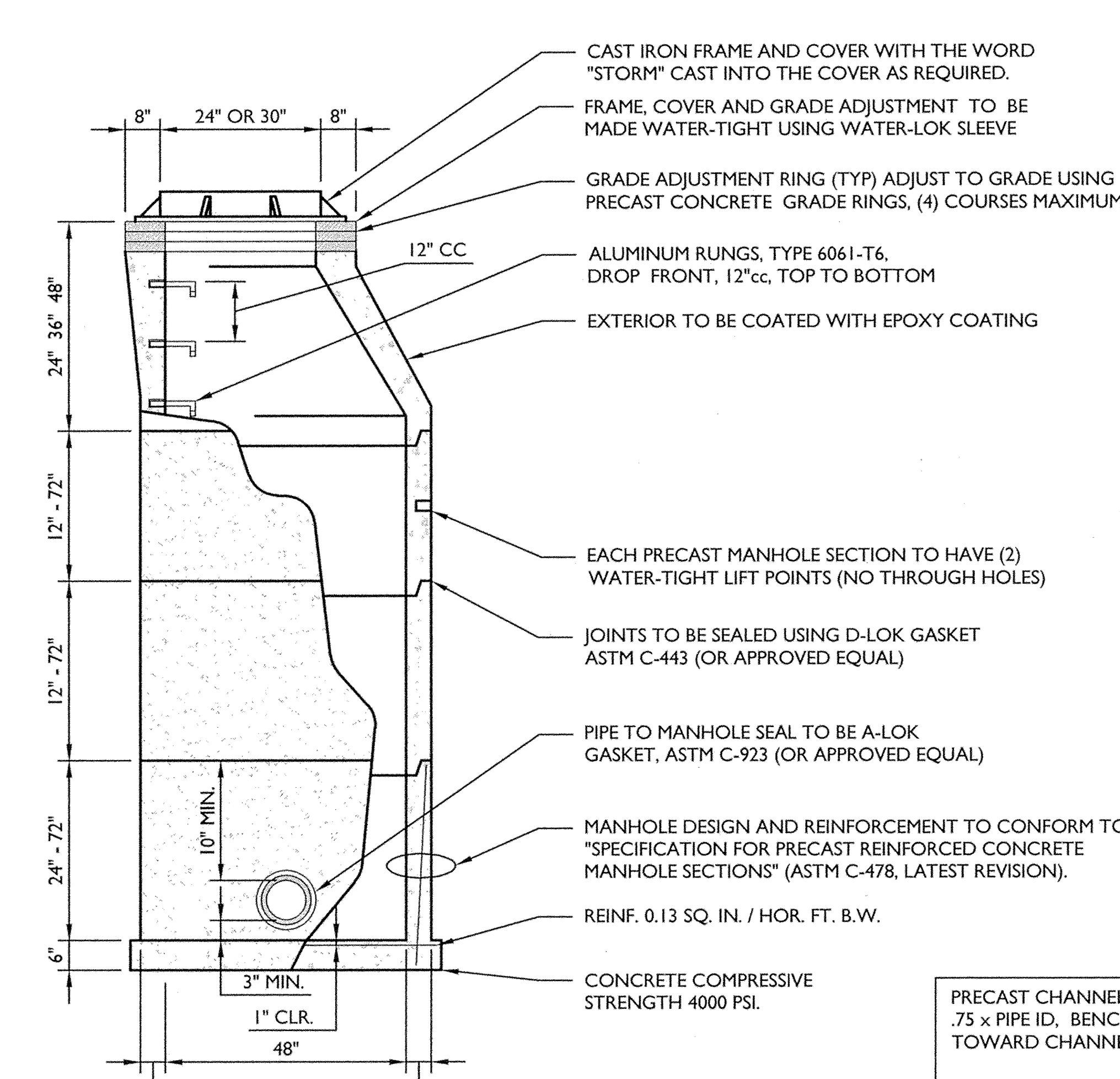

PRECAST CHANNEL, HEIGHT TO BE .75 x PIPE ID, BENCH TO PITCH TOWARD CHANNEL 1":12".

PRECAST CONCRETE STRUCTURE TO BE WET CAST WITH MONOLITHIC BASE SECTION

48" DIAMETER STORM MANHOLE DETAIL

NOT TO SCALE — MCPA-UTIL-STRM-1600 — 05/01/18

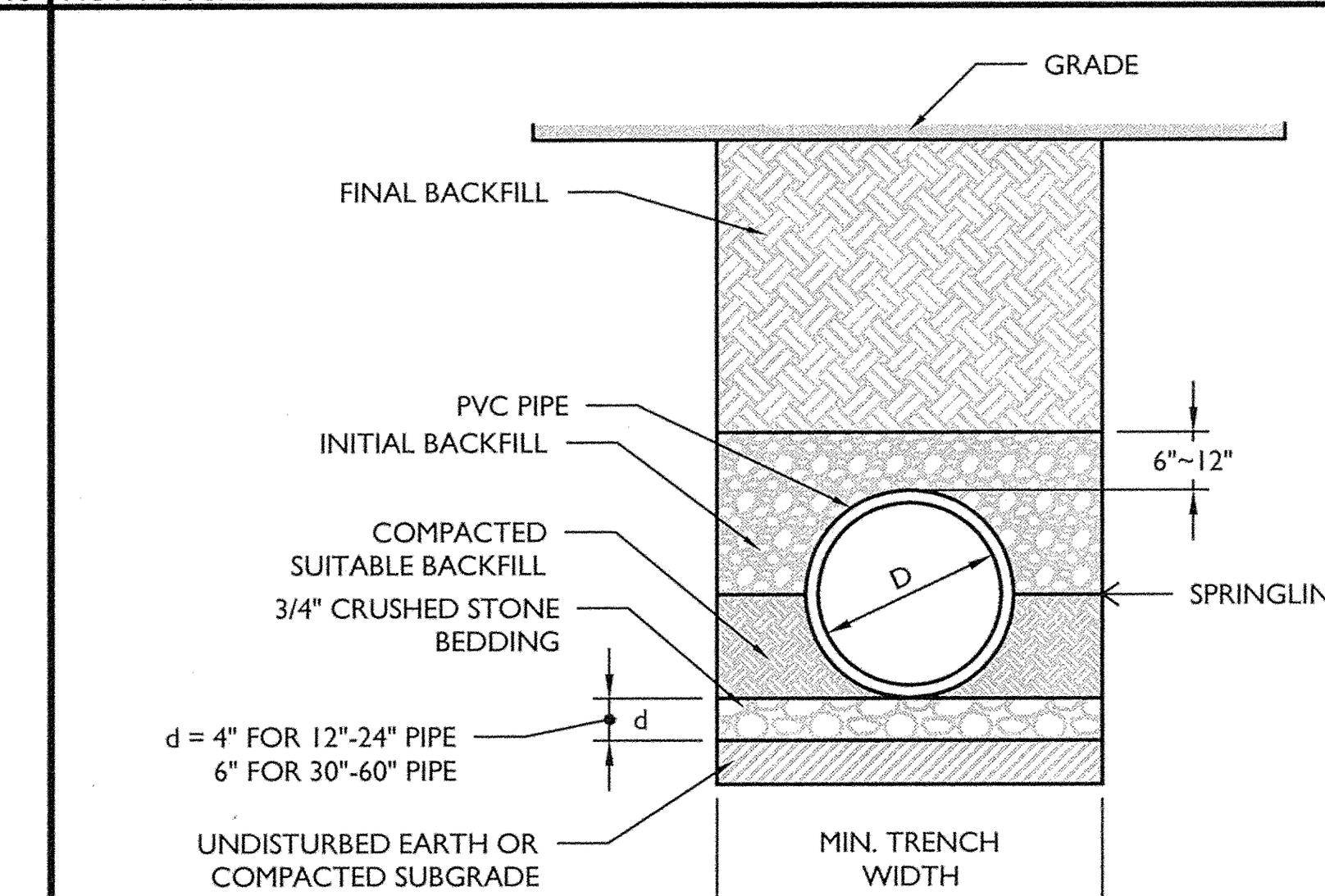

NOTES:

1. ALL PVC GRAVITY PIPE SYSTEMS SHALL BE INSTALLED IN ACCORDANCE WITH ASTM D2321.
2. GRAVITY SANITARY PIPE SHALL BE PVC SDR 35 PER ASTM D3034 OR AS REQUIRED BY THE GOVERNING AUTHORITY.

PVC SANITARY PIPE BEDDING (GRAVITY) DETAIL

NOT TO SCALE — MCPA-UTIL-SSWR-2602 — 05/01/18

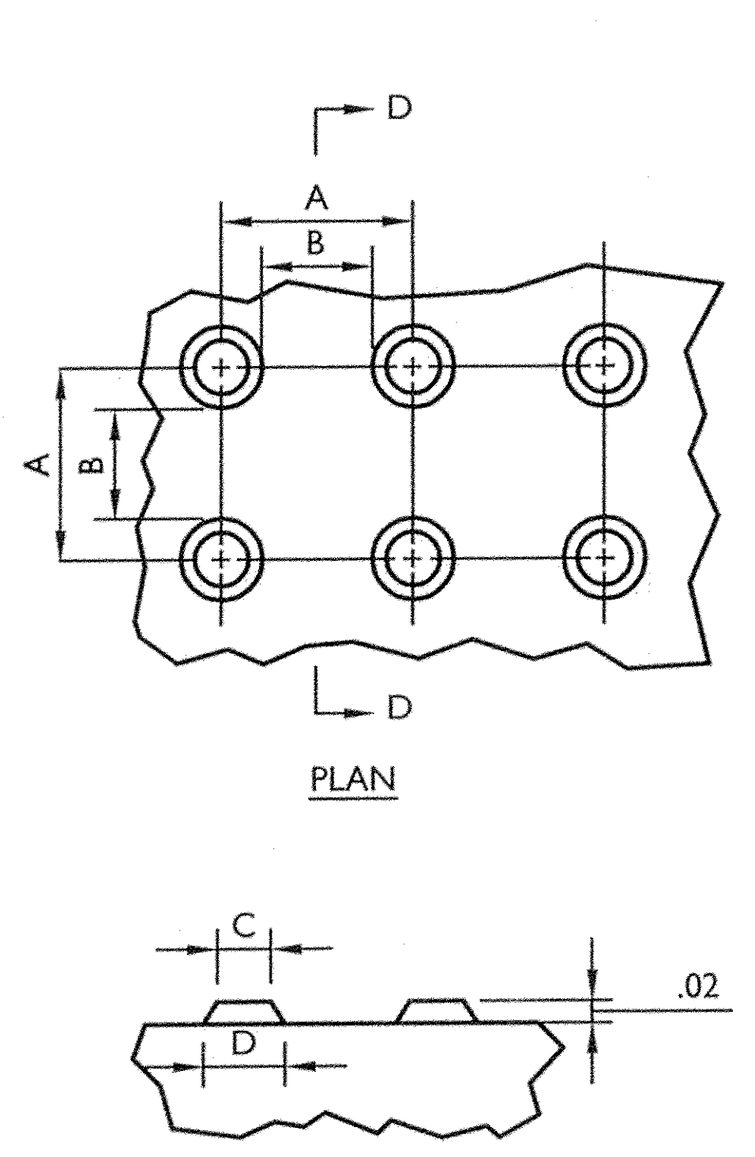

TRUNCATED DOME DIMENSIONS		
DIM	MIN mm (inch)	MAX mm (inch)
A	1.6"	2.4"
B	0.65"	1.5"
C	NOTE 1	NOTE 1
D	0.9"	1.4"

NOTES:

1. THE "C" DIMENSION IS 50% TO 65% OF THE "D" DIMENSION.

DETECTABLE WARNING SURFACE (DWS) TRUNCATED DOME DETAIL

NOT TO SCALE — MCPA-SITE-HADA-1601 — 05/01/18

2018\18001614A\Engineering\Site Plans\C-DTLS.dwg\C-10-DETAILS By: MDEJESUS

PLAN BOOK	PAGE
373	32

MASER CONSULTING P.A.
Customer Loyalty *through* Client Satisfaction
www.maserconsulting.com
Engineers ■ Planners ■ Surveyors
Landscape Architects ■ Environmental Scientists

Office Locations:
Red Bank, NJ; Clinton, NJ; Hamilton, NJ; Egg Harbor, NJ; Montvale, NJ; Mt. Arlington, NJ; Mt. Laurel, NJ; Albany, NY; New Windsor, NY; Westchester, NY; Charlotte, NC; Raleigh, NC; Lehigh Valley, PA; Exton, PA; Philadelphia, PA; Pittsburgh, PA; Tampa, FL; Orlando, FL; Miami, FL; Jacksonville, FL; Sterling, VA; Norfolk, VA; Albuquerque, NM; Columbia, MD

Copyright © 2018. Maser Consulting. All Rights Reserved. This drawing and all the information contained herein is authorized for use only by the party for whom the services were contracted or to whom it is certified. This drawing may not be copied, reused, disclosed, distributed or relied upon for any other purpose without the express written consent of Maser Consulting, P.A.

811 — Know what's below. Call before you dig.
PROTECT YOURSELF
ALL STATES REQUIRE NOTIFICATION OF EXCAVATORS, DESIGNERS, OR ANY PERSON PREPARING TO DISTURB THE EARTH'S SURFACE ANYWHERE IN ANY STATE
20181273405
FOR STATE SPECIFIC DIRECT PHONE NUMBERS VISIT: WWW.CALL811.COM

REV	DATE	DRAWN BY	DESCRIPTION
1	7/18/18	MD	REVISED PER COUNTY PLANNING COMMISSION COMMENTS AT 7/18/18 MTG

COMMONWEALTH OF PENNSYLVANIA — REGISTERED PROFESSIONAL — C. RICHARD ROSEBERRY — ENGINEER No. 46162

C. RICHARD ROSEBERRY
PENNSYLVANIA REGISTERED PROFESSIONAL ENGINEER - LICENSE NUMBER: PE46162-R

FINAL LAND DEVELOPMENT PLAN FOR

MERCER COUNTY STATE BANK PROPOSED BANK SITE

PARCEL ID 430-S2-A21D-0000

549 SOUTH MAIN STREET

BOROUGH OF HARRISVILLE
BUTLER COUNTY
PENNSYLVANIA

PITTSBURGH OFFICE
North Shore Place II
322 Northshore Drive,
Building 1B, Suite 200
Pittsburgh, PA 15212
Phone: 877.627.3772

SCALE:	DATE:	DRAWN BY:	CHECKED BY:
AS SHOWN	07/10/18	MD	CRR
PROJECT NUMBER: 18001614A	DRAWING NAME: C-DTLS		

SHEET TITLE: CONSTRUCTION DETAILS

SHEET NUMBER: 10 of 11

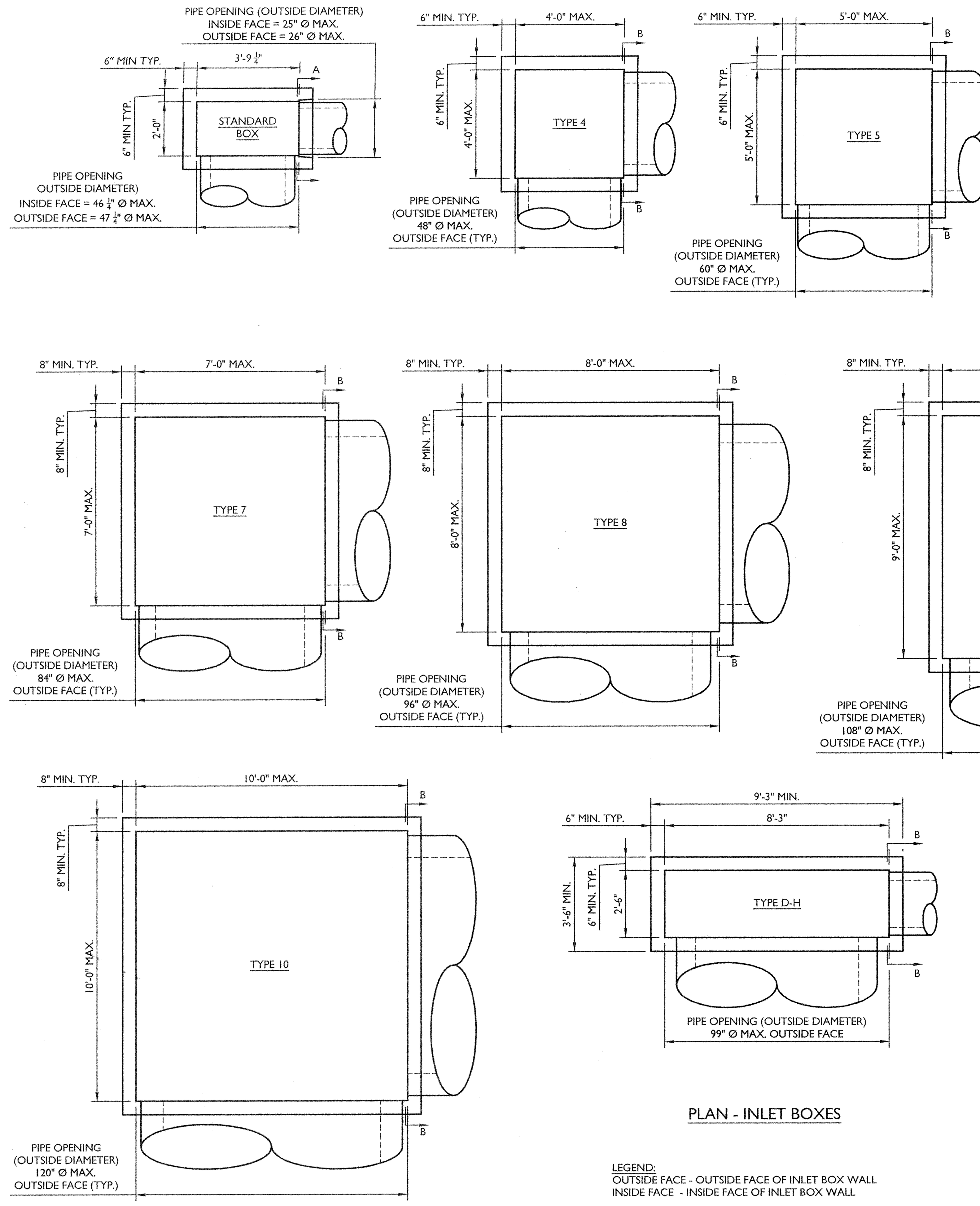

PLAN - INLET BOXES

LEGEND:
OUTSIDE FACE - OUTSIDE FACE OF INLET BOX WALL
INSIDE FACE - INSIDE FACE OF INLET BOX WALL

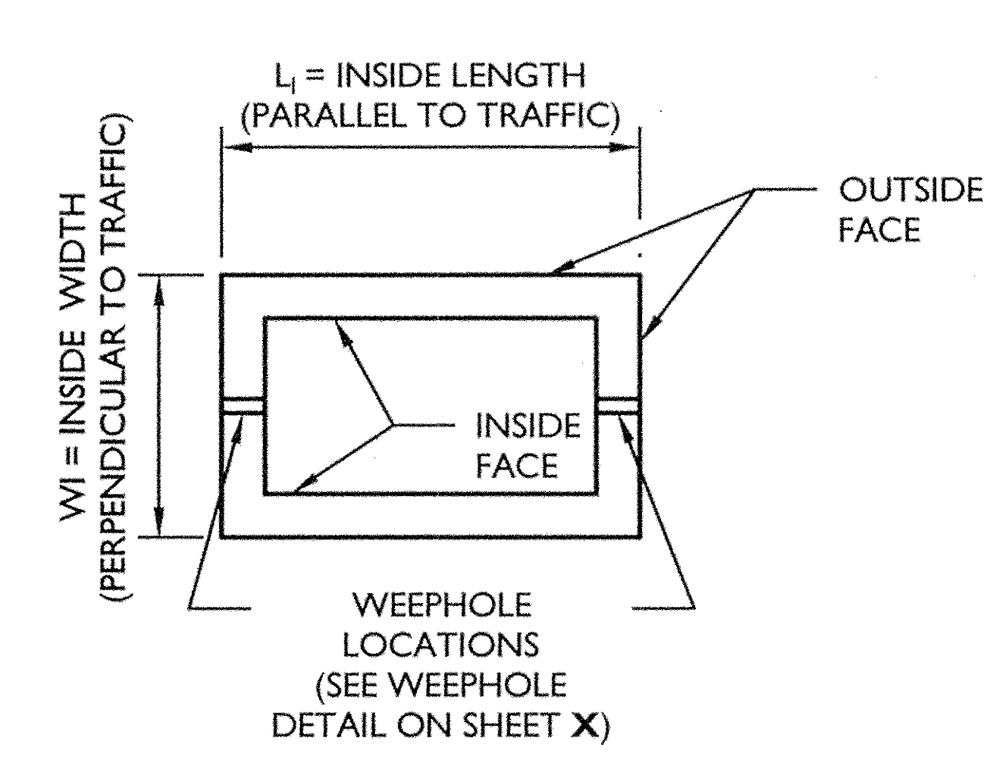

SCHEMATIC - INLET BOX

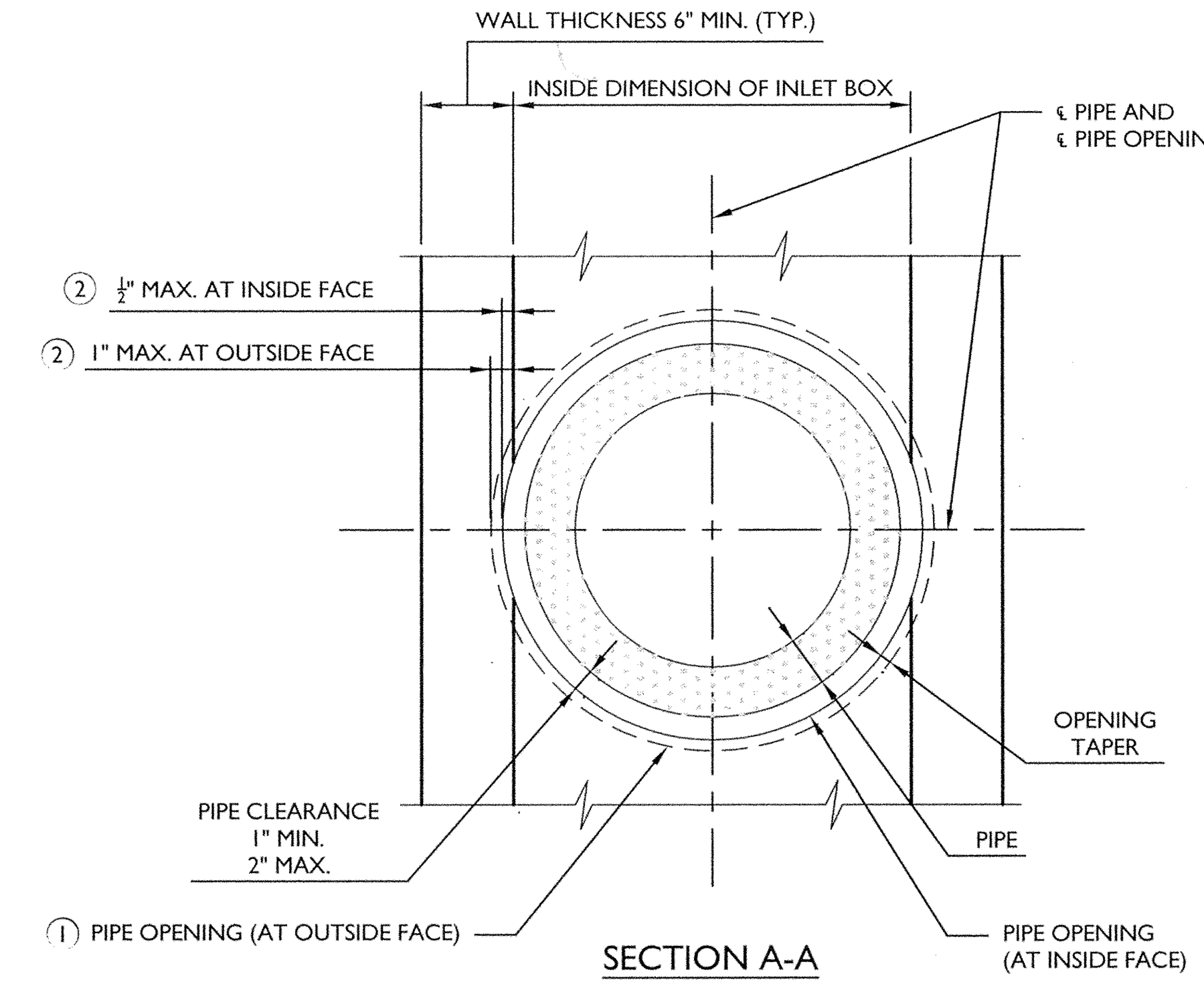

SECTION A-A
(STANDARD INLET BOX ONLY)

LEGEND:
(1) OUTSIDE DIAMETER OF PIPE TO PIPE OPENING
(2) REDUCTION IN WALL THICKNESS DIMENSION
(3) INSIDE FACE OF BOX WALL TO OUTSIDE DIAMETER OF PIPE OPENING

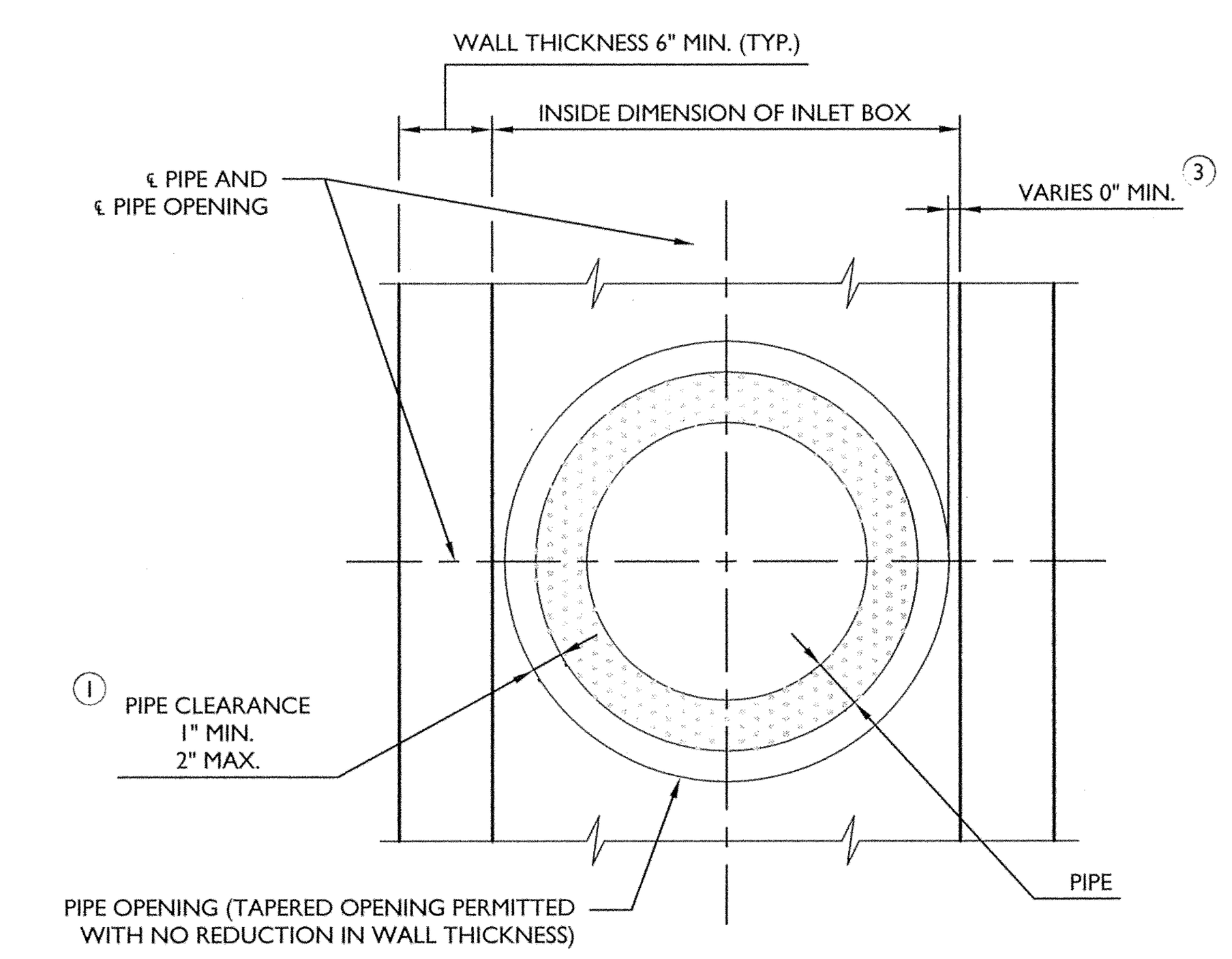

SECTION B-B
(TYPICAL ALL TYPES EXCEPT STANDARD)

LEGEND:
(1) OUTSIDE DIAMETER OF PIPE TO PIPE OPENING
(2) REDUCTION IN WALL THICKNESS DIMENSION
(3) INSIDE FACE OF BOX WALL TO OUTSIDE DIAMETER OF PIPE OPENING

INLET BOXES DETAIL

NOT TO SCALE MCPA-UTIL-STRM-1001 05/01/18

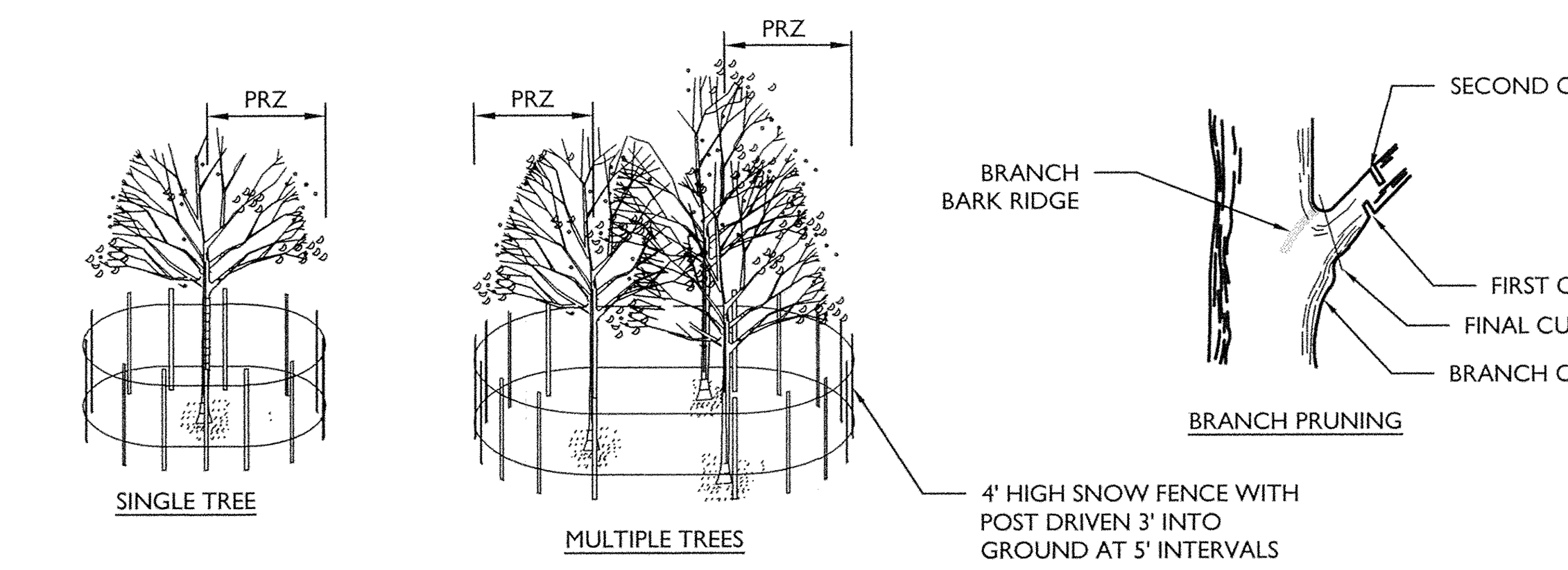

NOTES:

1. PROTECTIVE FENCING IS TO BE ERECTED PRIOR TO CONSTRUCTION AND MAINTAINED DURING CONSTRUCTION AS DIRECTED BY THE LANDSCAPE ARCHITECT, SOIL CONSERVATION DISTRICT AND/OR MUNICIPAL ENGINEER.
2. NO CONSTRUCTION ACTIVITY IS PERMITTED WITHIN THE PROTECTIVE FENCING.
3. AS CONSTRUCTION NEARS COMPLETION THE FENCING WILL BE REMOVED AS DIRECTED.
4. AT THE COMPLETION OF CONSTRUCTION, ALL TREES WILL BE PRUNED AS NECESSARY TO CORRECT ANY DAMAGE RESULTING FROM CONSTRUCTION ACTIVITY.
5. GENERAL MECHANICAL DAMAGE - SEE CRITICAL ROOT ZONE CALCULATION (CRZ) FOR CORRECT PLACEMENT OF TREE PROTECTION.
6. BOX TREES WITHIN 25 FEET OF A BUILDING SITE TO PREVENT MECHANICAL INJURY. FENCING OR OTHER BARRIER SHOULD BE INSTALLED BEYOND THE CRITICAL ROOT ZONE.
7. BOARDS WILL NOT BE NAILED TO TREES DURING BUILDING OPERATIONS.
8. FEEDER ROOTS SHOULD NOT BE CUT IN AN AREA INSIDE THE PROTECTED ROOT ZONE (PRZ) OR CRITICAL ROOT ZONE (CRZ). TREE ROOT SYSTEM COMMONLY EXTEND BEYOND THE DRIP LINE.
9. DAMAGED TRUNKS OR EXPOSED ROOTS SHOULD HAVE DAMAGED BARK REMOVED IMMEDIATELY AND NO PAINT SHALL BE APPLIED. EXPOSED ROOTS SHOULD BE COVERED WITH TOPSOIL IMMEDIATELY AFTER EXCAVATION IS COMPLETE. ROOTS SHALL BE PRUNED TO GIVE A CLEAN, SHARP SURFACE AMENABLE TO HEALING. ROOTS EXPOSED DURING HOT WEATHER SHOULD BE IRRIGATED TO PREVENT PERMANENT TREE INJURY. CARE FOR SERIOUS INJURY SHOULD BE PRESCRIBED BY A PROFESSIONAL FORESTER OR CERTIFIED TREE EXPERT.
10. TREE LIMB REMOVAL WHERE NECESSARY, WILL BE DONE AS NATURAL TARGET PRUNING TO REMOVE THE DESIRED BRANCH COLLAR. THERE SHOULD BE NO FLUSH CUTS. FLUSH CUTS DESTROY A MAJOR DEFENSE SYSTEM OF THE TREE. NO TREE PAINT SHALL BE APPLIED. ALL CUTS SHALL BE MADE AT THE OUTSIDE EDGE OF THE BRANCH COLLAR. CUTS MADE TOO FAR BEYOND THE BRANCH COLLAR MAY LEAD TO EXCESS SPROUTING, CRACKS AND ROT. REMOVAL OF A "V" CROTCH SHOULD BE CONSIDERED FOR FREE STANDING SPECIMEN TREES TO AVOID FUTURE SPLITTING DAMAGE.
11. CRITICAL ROOT ZONE (CRZ) OR PROTECTED ROOT ZONE (PRZ) CALCULATION:
MEASURE DHB OF THE TREE (DIAMETER OF TREE IN BREAST HEIGHT OR 4.5' ABOVE GROUND ON THE UPHILL SIDE) IN INCHES.
CRZ OR PRZ = DHB TIMES 1.5 (FOR OLD/UNHEALTHY/SENSITIVE TREES) OR DHB X 1.0 (FOR YOUNG/HEALTH/TOLERANT TREES), EXPRESS IN FEET.

TEMPORARY TREE PROTECTION DETAIL

NOT TO SCALE MCPA-SOIL-EROS-2500 05/01/18

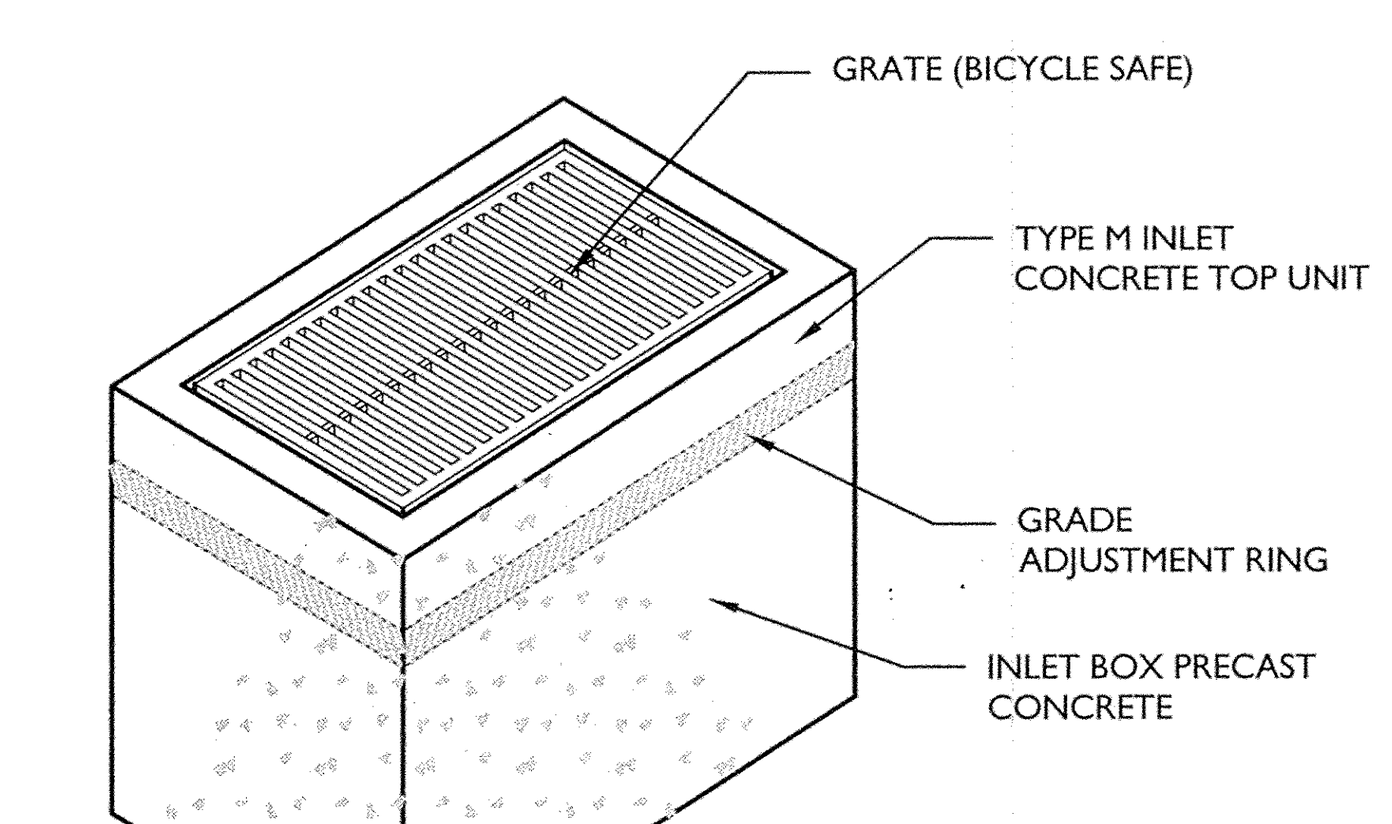

NOTE:
STORM DRAIN INLET LABEL SHOULD READ "NO DUMPING, DRAINS TO WATERWAYS" OR OTHERWISE APPROVED BY R.E. FISH LOGOS SHALL ALSO BE INCLUDED ON BOTH SIDES OF LABEL

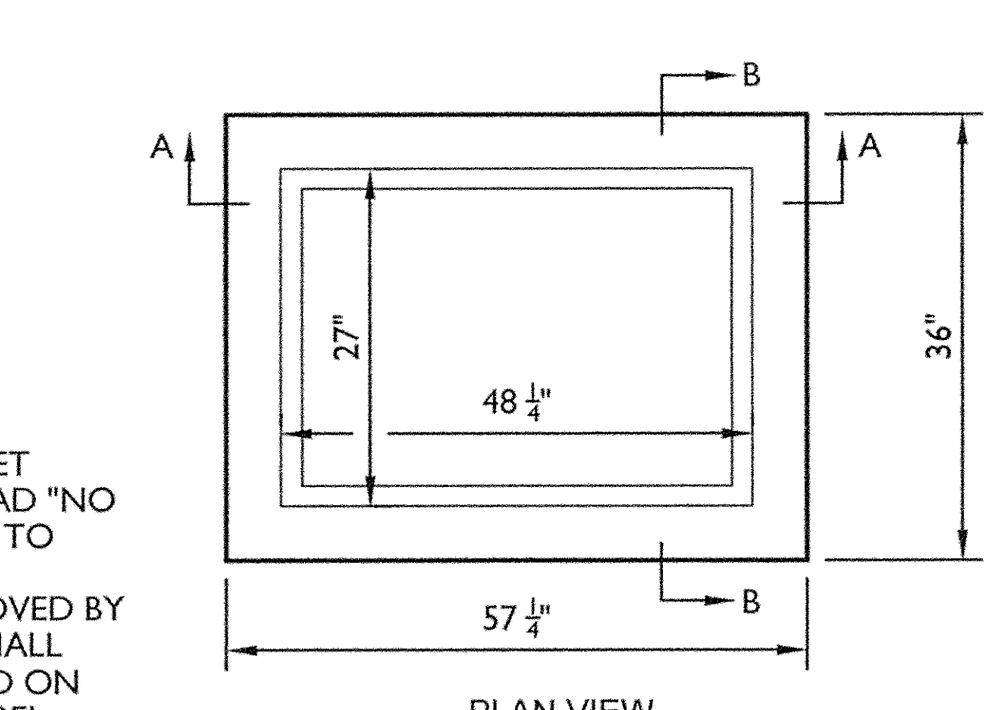

PLAN VIEW

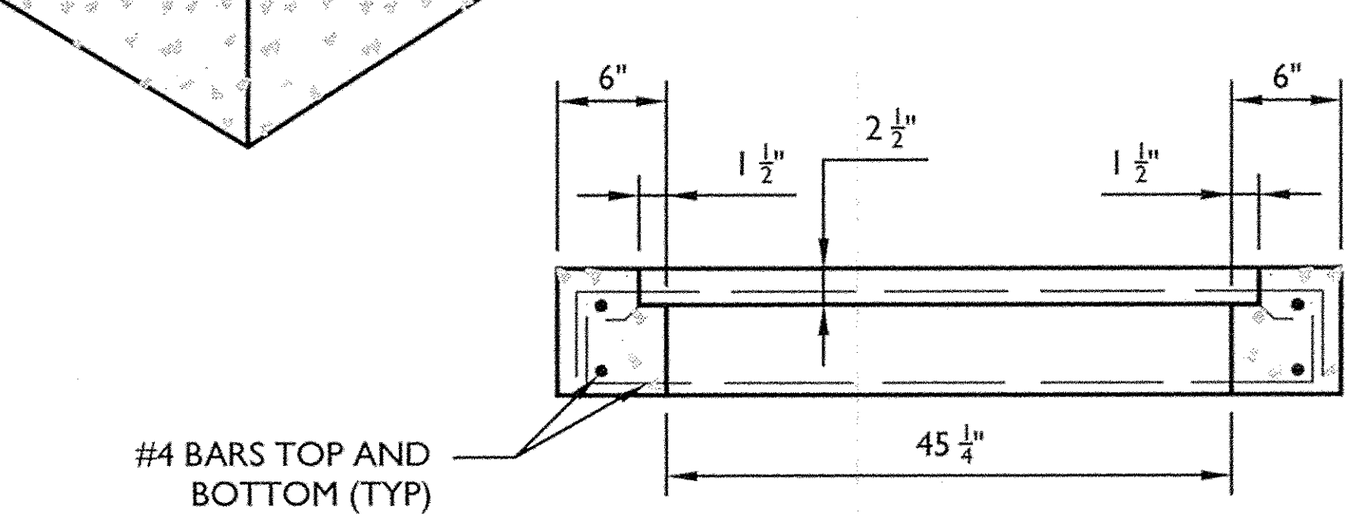

SECTION A-A

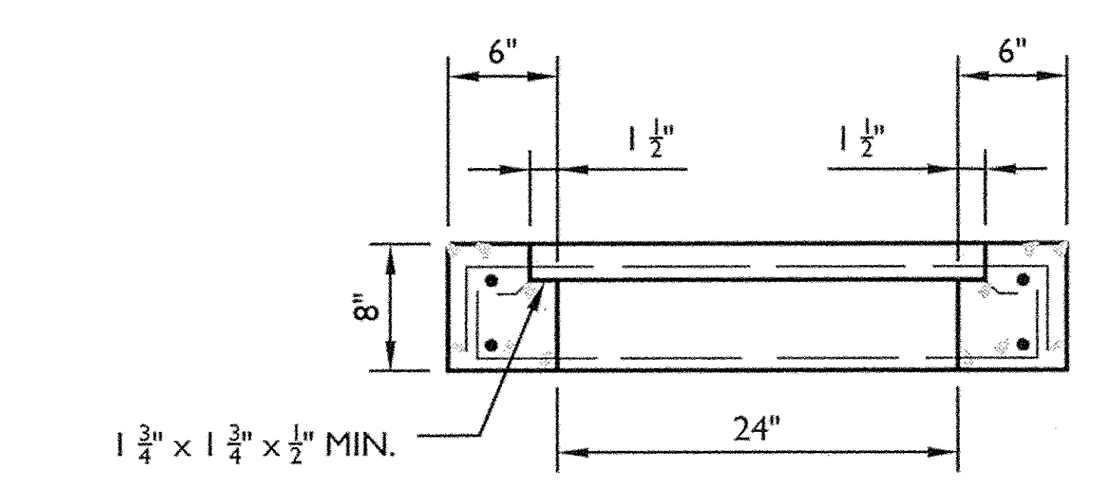

SECTION B-B

TYPE "M" INLET DETAIL

NOT TO SCALE MCPA-UTIL-STRM-1300 05/01/18

MINIMUM SIZE OF CONCRETE THRUST BLOCKS																	
d	A	B	C	d	A	B	C	d	A	B	C	A	B	C	d x e	A	B
6"	2' - 0"	8"	1' - 3"	6"	2' - 6"	8"	1' - 3"	6"	1' - 6"	6"	1' - 3"	1' - 6"	8"	1' - 3"	6" x 4"	1' - 6"	1' - 0"
8"	2' - 6"	8"	1' - 6"	8"	3' - 0"	8"	1' - 6"	8"	1' - 6"	8"	1' - 9"	1' - 6"	8"	1' - 9"	8" x 4"	2' - 0"	1' - 0"
10"	3' - 0"	10"	2' - 0"	10"	3' - 6"	10"	2' - 0"	10"	2' - 3"	10"	2' - 0"	1' - 6"	10"	2' - 0"	10" x 6"	2' - 4"	1' - 3"
12"	3' - 6"	10"	2' - 6"	12"	3' - 9"	10"	2' - 9"	12"	2' - 6"	10"	2' - 6"	1' - 6"	10"	2' - 6"	10" x 8"	2' - 6"	1' - 6"
TEES & CROSSES				90° BENDS					45° BENDS			22 1/2° & 11 1/4° BENDS			REDUCERS		

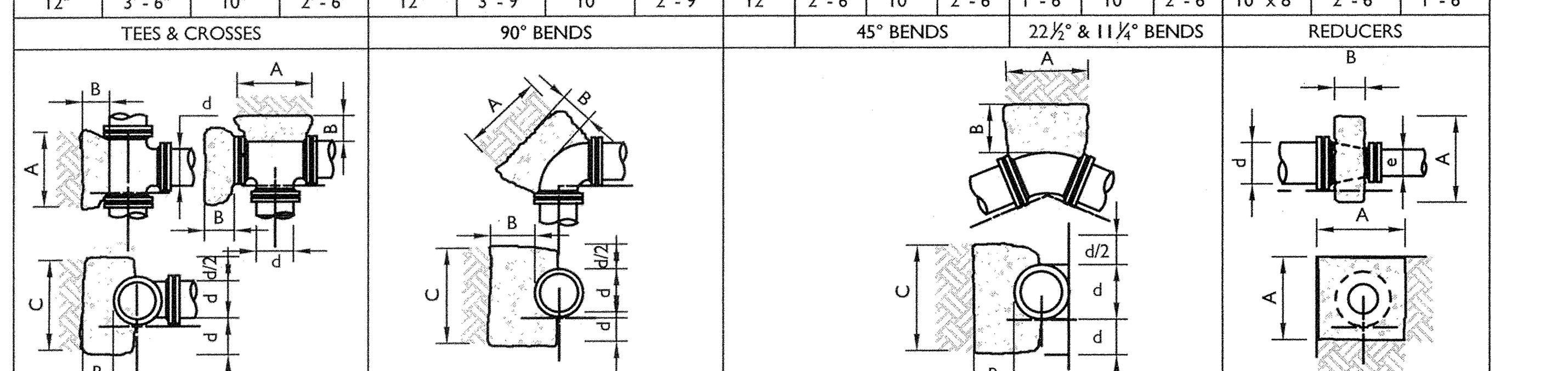

NOTES:

1. ALL HORIZONTAL BENDS SHALL HAVE CONCRETE THRUST BLOCKS WITH MINIMUM BEARING AREAS AGAINST UNDISTURBED SOIL AND NO JOINT SHALL BE COVERED WITH CONCRETE.
2. BEARING AREAS ARE BASED UPON UNDISTURBED SOIL WITH A MINIMUM BEARING CAPACITY OF 0.5 TONS PER SQUARE FOOT. FOR A LESSER SOIL BEARING CAPACITY THESE AREAS SHALL BE INCREASED ACCORDINGLY.
3. THRUST BLOCKS SHALL BE POURED DIRECTLY AGAINST TRENCH WALLS AND SHALL BE PENNDOT CLASS "A" CONCRETE.
4. DETAILS FOR SUPPORTS AND BRACING FOR VERTICAL BENDS FOR 12" DIAMETER OR LARGER SHALL BE APPROVED BY THE AUTHORITY PRIOR TO CONSTRUCTION.

THRUST BLOCKS DETAIL

NOT TO SCALE MCPA-UTIL-WATR-1400 05/01/18

NUMBER AND SIZE OF RODS REQUIRED AND PIPE LENGTH IN FEET TO BE RESTRAINED									
PIPE SIZE IN INCHES	90° TEE OR DEAD END PLUG			45° BEND			22 1/2° BEND		
	No.	SIZE	L*	No.	SIZE	L*	No.	SIZE	L*
4	2	3/4"	30'	2	3/4"	10'	2	3/4"	5'
6	2	3/4"	40'	2	3/4"	10'	2	3/4"	5'
8	4 or 2	3/4" or 7/8"	50'	2	3/4"	15'	2	3/4"	5'
10	4 or 2	3/4" or 1"	60'	2	3/4"	20'	2	3/4"	5'
12	4	7/8"	70'	2	3/4"	20'	2	3/4"	5'
14	4	1"	80'	2	3/4"	25'	2	3/4"	5'
16	4	1"	80'	2	3/4"	25'	2	3/4"	5'

L* = LENGTH OF PIPE TO BE RESTRAINED IS FOR EACH SIDE OF BEND

NOTES:

1. USE OF MECHANICAL JOINT RETAINER GLANDS SHALL PROVIDE A THRUST RESTRAINT SYSTEM EQUIVALENT TO THAT LISTED IN THE TABLE FOR CLAMPS AND RODS.
2. LENGTHS ARE BASED ON THE FOLLOWING CRITERIA: 150 PSI MAXIMUM PRESSURE AND 3'-6" 0F COVER. TABLE IS FOR USE WITH CAST IRON PIPE OR DUCTILE IRON PIPE ONLY. IF TEST CONDITIONS ARE MORE SEVERE OR LARGER PIPES ARE PROPOSED, THEN SPECIAL COMPUTATIONS MUST BE PROVIDED BY LICENSED PROFESSIONAL ENGINEER.

JOINT RESTRAINT SCHEDULE DETAIL

NOT TO SCALE MCPA-UTIL-WATR-1500 05/01/18

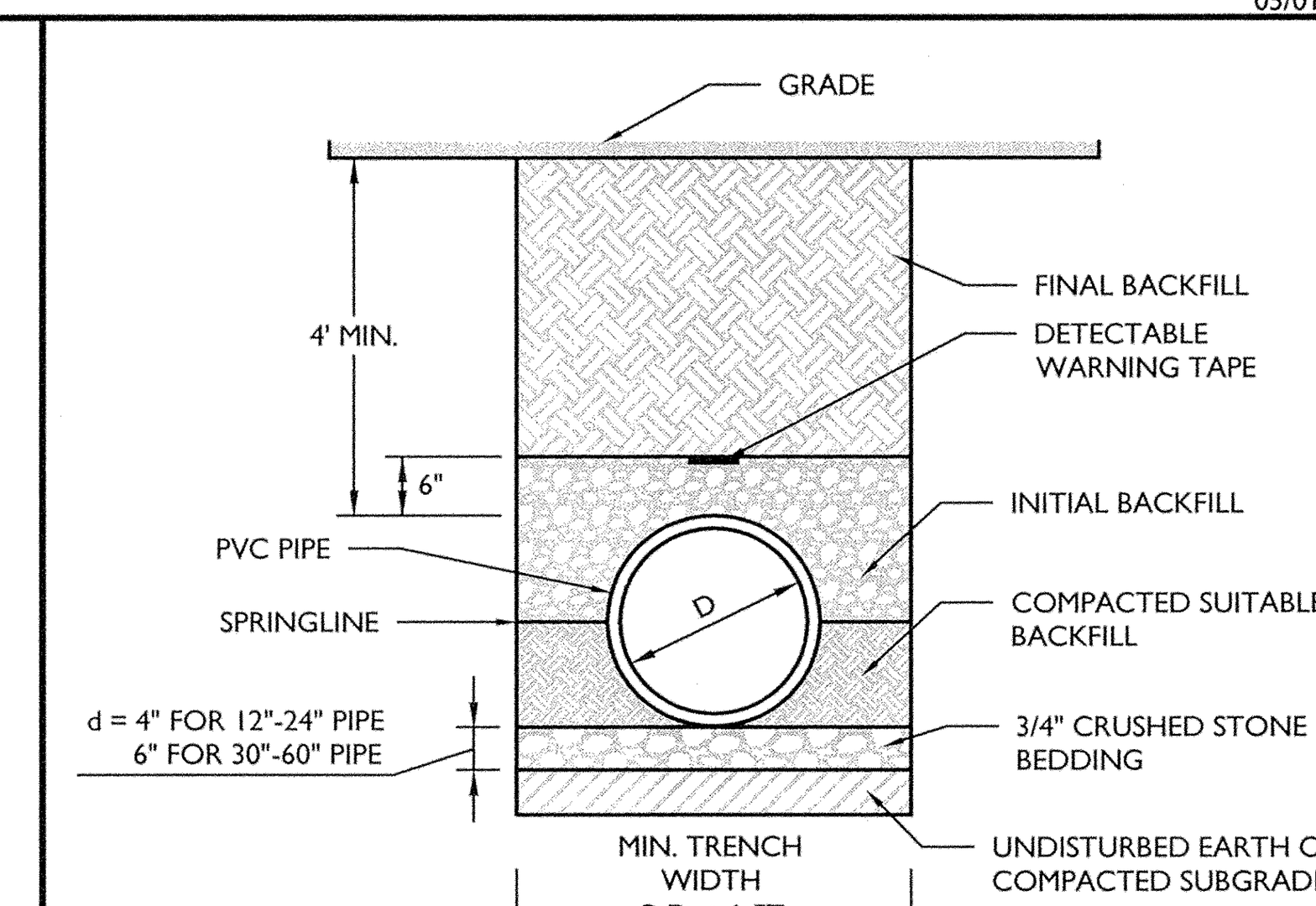

NOTES:

1. ALL PVC WATER PIPE SYSTEMS SHALL BE INSTALLED IN ACCORDANCE WITH ANSI/AWWA C605.
2. WATER MAIN SHALL BE PRESSURE **CLASS 165 DR 25** PVC PIPE PER ASTM C900-16 OR AS REQUIRED BY THE GOVERNING AUTHORITIES.

PVC WATER PIPE BEDDING DETAIL

NOT TO SCALE MCPA-UTIL-WATR-1910 05/01/18

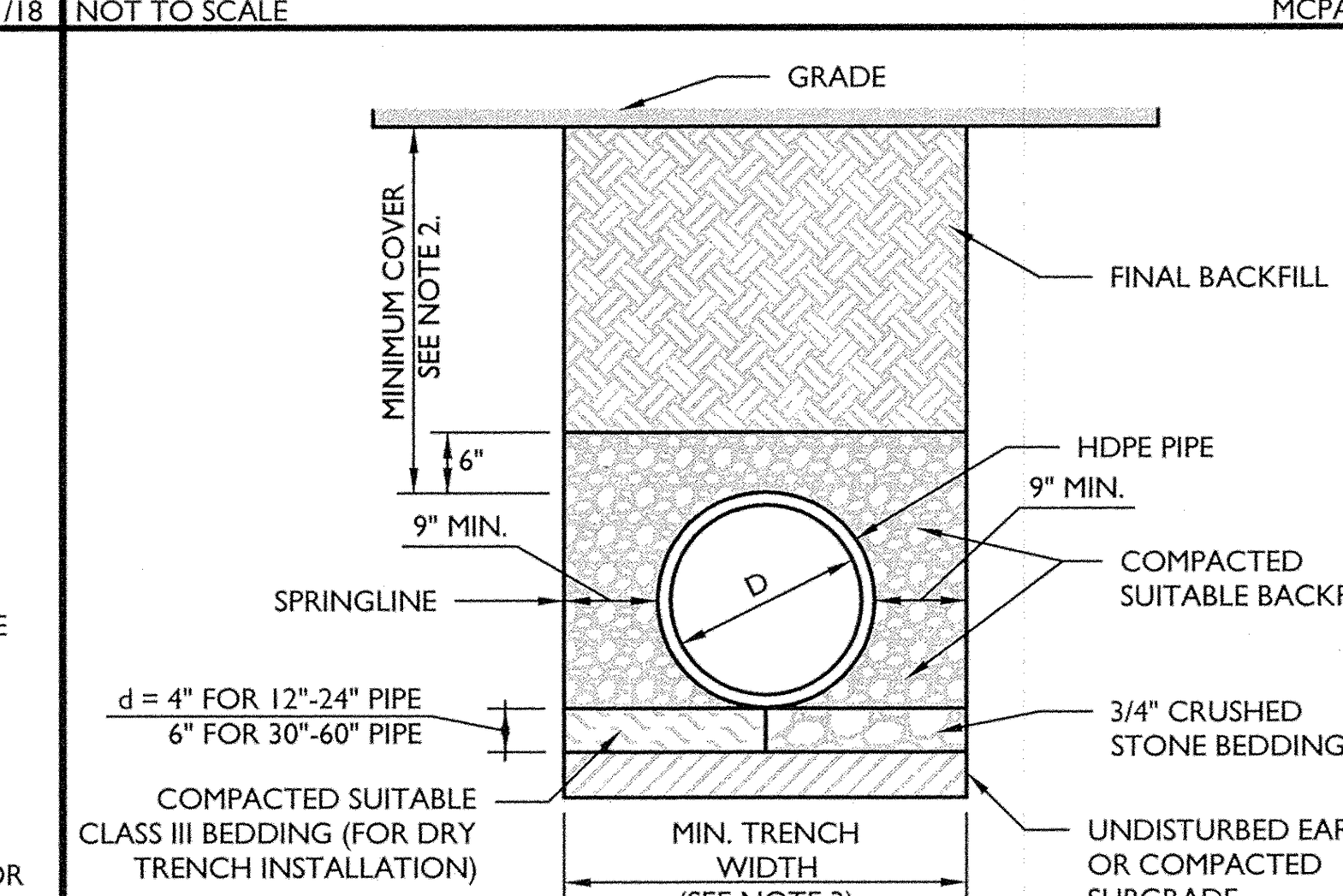

NOTES:

1. ALL PIPE SYSTEMS AND BACKFILL SHALL BE INSTALLED IN ACCORDANCE WITH ASTM D2321.
2. MINIMUM COVER FOR HDPE PIPES IS 12" UP TO 48" DIAMETER PIPE AND 24" OF COVER FOR UP TO 60" DIAMETER PIPE. PIPE COVER IS MEASURED FROM TOP OF PIPE TO THE BOTTOM OF FLEXIBLE PAVEMENT, OR TO THE TOP OF RIGID PAVEMENT, OR TO THE GROUND SURFACE.
3. MINIMUM TRENCH WIDTH PER MANUFACTURER'S RECOMMENDATIONS.

HDPE STORM PIPE BEDDING DETAIL

NOT TO SCALE MCNJ-UTIL-STRM-2302 05/01/17

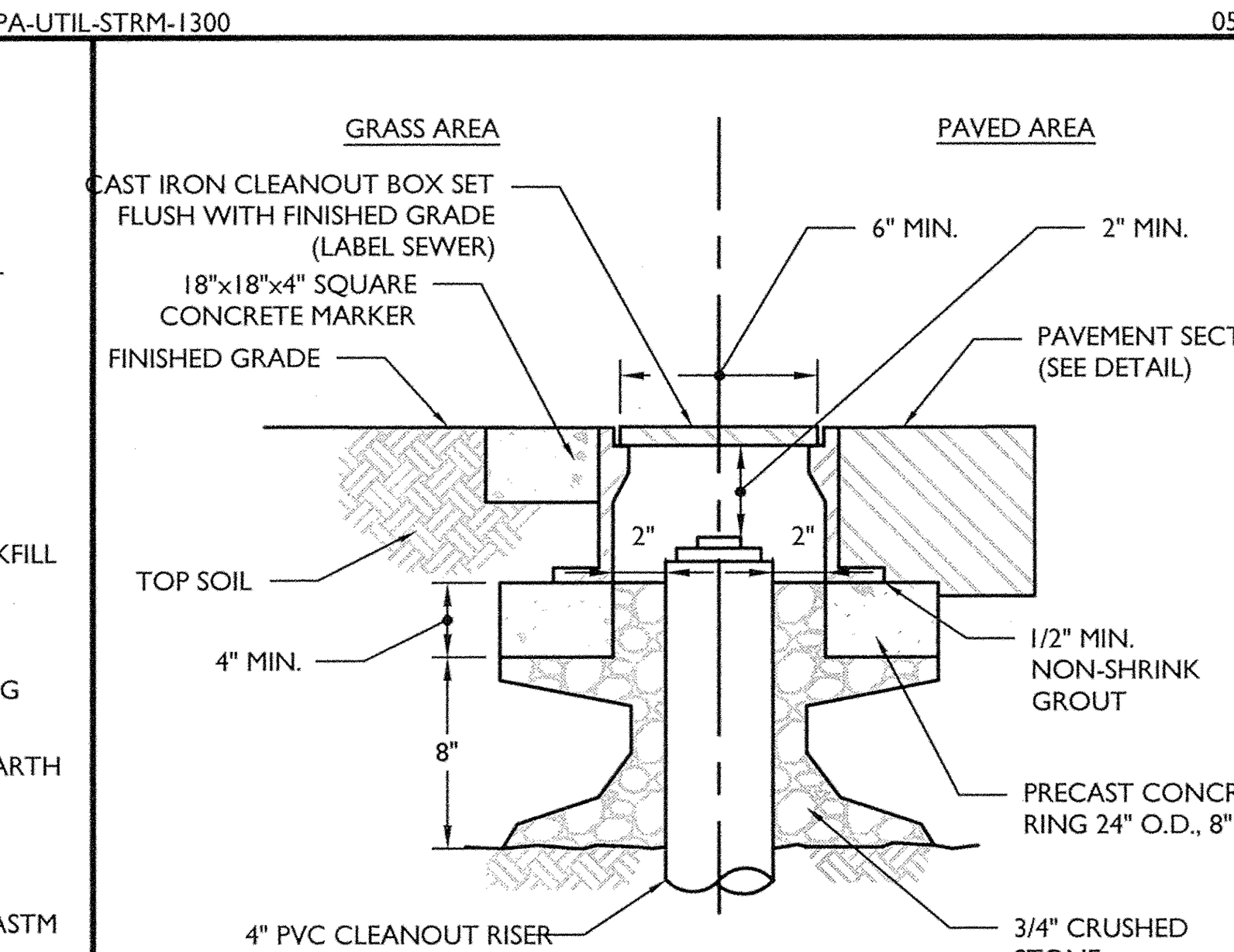

NOTES

1. ALL PVC CLEANOUTS TO HAVE CAST IRON FRAME AND COVER PROTECTION BOX. DESIGN FOR H20 LOADING.

CLEANOUT PROTECTION BOX DETAIL

NOT TO SCALE MCPA-UTIL-SSWR-1600 05/01/18

PLAN BOOK	PAGE
373	33

MASER CONSULTING P.A.
Customer Loyalty *through* Client Satisfaction
www.maserconsulting.com
Engineers ■ Planners ■ Surveyors
Landscape Architects ■ Environmental Scientists
Office Locations:
■ Red Bank, NJ ■ Clinton, NJ ■ Hamilton, NJ ■ Egg Harbor, NJ ■ Montvale, NJ ■ Mt. Arlington, NJ ■ Mt. Laurel, NJ ■ Albany, NY ■ New Windsor, NY ■ Westchester, NY ■ Charlotte, NC ■ Raleigh, NC
■ Lehigh Valley, PA ■ Exton, PA ■ Philadelphia, PA ■ Pittsburgh, PA ■ Tampa, FL ■ Orlando, FL ■ Miami, FL ■ Jacksonville, FL ■ Sterling, VA ■ Norfolk, VA ■ Albuquerque, NM ■ Columbia, MD

Copyright © 2018. Maser Consulting. All Rights Reserved. This drawing and all the information contained herein is authorized for use only by the party for whom the services were contracted or to whom it is certified. This drawing may not be copied, reused, disclosed, distributed or relied upon for any other purpose without the express written consent of Maser Consulting, P.A.

811
Know what's **below.** Call before you dig.
PROTECT YOURSELF
ALL STATES REQUIRE NOTIFICATION OF EXCAVATORS, DESIGNERS, OR ANY PERSON PREPARING TO DISTURB THE EARTH'S SURFACE ANYWHERE IN ANY STATE
20181273405
FOR STATE SPECIFIC DIRECT PHONE NUMBERS VISIT: WWW.CALL811.COM

REV	DATE	DRAWN BY	DESCRIPTION
1	7/18/18	MD	REVISED PER COUNTY PLANNING COMMISSION COMMENTS AT 7/18/18 MTG

COMMONWEALTH OF PENNSYLVANIA
REGISTERED PROFESSIONAL
C. RICHARD ROSEBERRY
ENGINEER
No. 46162

C. RICHARD ROSEBERRY
PENNSYLVANIA REGISTERED PROFESSIONAL ENGINEER - LICENSE NUMBER: PE46162-R

FINAL
LAND DEVELOPMENT
PLAN
FOR
MERCER COUNTY
STATE BANK
PROPOSED BANK
SITE
PARCEL ID 430-S2-A21D-0000
549 SOUTH MAIN STREET
BOROUGH OF HARRISVILLE
BUTLER COUNTY
PENNSYLVANIA

PITTSBURGH OFFICE
North Shore Place II
322 Northshore Drive,
Building 1B, Suite 200
Pittsburgh, PA 15212
Phone: 877.627.3772

SCALE:	DATE:	DRAWN BY:	CHECKED BY:
AS SHOWN	07/10/18	MD	CRR
PROJECT NUMBER: 18001614A	DRAWING NAME: C-DTLS		

SHEET TITLE:
CONSTRUCTION DETAILS

SHEET NUMBER:
11 of 11

OWNER'S ADOPTION

KNOW ALL MEN BY THESE PRESENTS THAT WE, BETTY E. GIESLER AND JOSEPH GREEN & SHIRLEY K. SCOPEL AND PATRICK T. MACURDY, OF THE TOWNSHIP OF CLEARFIELD AND/OR WINFIELD, COUNTY OF BUTLER AND COMMONWEALTH OF PENNSYLVANIA, FOR OURSELVES, OUR HEIRS, EXECUTORS, ADMINISTRATORS AND ASSIGNS, DO HEREBY ADOPT THIS AS OUR PLAN OF LOTS OF OUR PROPERTIES, SITUATE IN THE TOWNSHIP OF CLEARFIELD AND/OR WINFIELD, COUNTY OF BUTLER AND COMMONWEALTH OF PENNSYLVANIA, AND FOR DIVERS ADVANTAGES ACCRUING TO US, DO HEREBY DEDICATE FOREVER, FOR PUBLIC USE FOR HIGHWAY PURPOSES, ALL SLOPE AREAS, DRIVES, ROADS, STREETS, LANES AND WAYS, AND OTHER PUBLIC HIGHWAYS SHOWN UPON THE PLAN, WITH THE SAME FORCE AND EFFECT AS IF THE SAME HAD BEEN OPENED THROUGH LEGAL PROCEEDINGS, AND IN THE CONSIDERATION OF THE APPROVAL OF SAID PLAN, AND ANY FUTURE ACCEPTANCE OF SAID PUBLIC HIGHWAYS BY THE COMMONWEALTH OF PENNSYLVANIA, COUNTY OF BUTLER AND TOWNSHIP OF CLEARFIELD AND/OR WINFIELD, WE HEREBY COVENANT AND AGREE TO AND BY THESE PRESENTS DO RELEASE AND FOREVER DISCHARGE THE COMMONWEALTH OF PENNSYLVANIA, COUNTY OF BUTLER AND TOWNSHIP OF CLEARFIELD AND/OR WINFIELD, THEIR SUCCESSORS AND ASSIGNS FROM ANY LIABILITY FOR DAMAGES ARISING AND TO ARISE FROM ANY APPROPRIATION OF SAID GROUND FOR PUBLIC HIGHWAYS AND THE PHYSICAL GRADING THEREOF TO ANY GRADES THAT MAY BE ESTABLISHED HEREAFTER AT ANY TIME. THIS DEDICATION AND RELEASE SHALL BE BINDING UPON THE ABOVE NAMED PROPERTY OWNERS, THEIR HEIRS, EXECUTORS, ADMINISTRATORS AND ASSIGNS AND PURCHASERS OF LOTS IN THIS PLAN.

IN WITNESS WHEREOF, WE HEREUNTO SET OUR HAND AND SEAL THIS 26 DAY OF JUNE, 2018.

x Betty E. Giesler
BETTY E. GIESLER

x Joseph Green
JOSEPH GREEN

x Shirley K Scopel / KNA Shirley K Green
SHIRLEY K. SCOPEL

x Patrick T. Macurdy
PATRICK T. MACURDY

ACKNOWLEDGMENT OF NOTARY PUBLIC

BEFORE ME, THE SUBSCRIBER, A NOTARY PUBLIC IN AND FOR THE COMMONWEALTH OF PENNSYLVANIA AND COUNTY OF BUTLER, PERSONALLY APPEARED THE ABOVE NAMED, ~~HARRY R. &~~ BETTY E GIESLER AND JOSEPH GREEN & SHIRLEY K. SCOPEL AND PATRICK T. MACURDY, AND ACKNOWLEDGED THE FOREGOING RELEASE AND DEDICATION OF PLAN TO BE THEIR ACT AND DEED AND DESIRED THE SAME TO BE RECORDED AS SUCH.

SWORN TO AND SUBSCRIBED BEFORE ME THIS 26 DAY OF JUNE, 2018.

MY COMMISSION EXPIRES THE 17 DAY OF FEBRUARY 2019

Debra L Jeffcoat
NOTARY PUBLIC

COMMONWEALTH OF PENNSYLVANIA
Notarial Seal
Debra L Jeffcoat, Notary Public
Jefferson Township, Butler County
My Commission Expires February 17, 2019

SURVEYOR'S CERTIFICATION

I, STANLEY D. GRAFF, A REGISTERED SURVEYOR OF THE COMMONWEALTH OF PENNSYLVANIA, DO HEREBY CERTIFY, TO THE BEST OF MY KNOWLEDGE, THAT THIS PLAN AS SHOWN HEREON IS BASED UPON ACTUAL FIELD SURVEY OF THE LAND DESCRIBED AND THAT ALL ANGLES, DISTANCES AND COURSES ARE CORRECTLY SHOWN, THAT THE MONUMENTS AND MARKERS HAVE BEEN SET AS SHOWN ON THE PLAN, AND THAT THIS PLAN CORRECTLY REPRESENTS THE LOTS, LANDS, STREETS AND HIGHWAYS AS SURVEYED AND PLOTTED BY ME FOR THE OWNERS OR AGENTS.

9 MAY '18
DATE

STANLEY D. GRAFF
REG. NO. SU-030161-E

COMMONWEALTH OF PENNSYLVANIA REGISTERED PROFESSIONAL STANLEY D. GRAFF LAND SURVEYOR NO. 30161-E

BUTLER COUNTY PLANNING COMMISSION REVIEW STATEMENT

REVIEWED BY THE BUTLER COUNTY PLANNING COMMISSION ON THIS 31ST DAY OF JULY, 2018.

SECRETARY

CHAIRMAN, BUTLER COUNTY PLANNING COMMISSION

BUTLER COUNTY PLANNING COMMISSION

PROOF OF RECORDING

RECORDED IN THE OFFICE OF THE RECORDER OF DEEDS OF THE COUNTY OF BUTLER, COMMONWEALTH OF PENNSYLVANIA, IN PLAN BOOK VOLUME 373, PAGE(S) 34.

GIVEN UNDER MY HAND AND SEAL THIS 19 DAY OF September, 2018.

Michele M. Mustello
RECORDER OF DEEDS

MICHELE M. MUSTELLO
RECORDER OF DEEDS
My Commission Expires First Monday in January 2020

RECORDER OF DEEDS BUTLER COUNTY, PA

OWNER'S ADOPTION

KNOW ALL MEN BY THESE PRESENTS THAT WE, JAMES F. GREEN JR. & ANN L. GREEN, OF THE TOWNSHIP OF CLEARFIELD AND/OR WINFIELD, COUNTY OF BUTLER AND COMMONWEALTH OF PENNSYLVANIA, FOR OURSELVES, OUR HEIRS, EXECUTORS, ADMINISTRATORS AND ASSIGNS, DO HEREBY ADOPT THIS AS OUR PLAN OF LOTS OF OUR PROPERTIES, SITUATE IN THE TOWNSHIP OF CLEARFIELD AND/OR WINFIELD, COUNTY OF BUTLER AND COMMONWEALTH OF PENNSYLVANIA, AND FOR DIVERS ADVANTAGES ACCRUING TO US, DO HEREBY DEDICATE FOREVER, FOR PUBLIC USE FOR HIGHWAY PURPOSES, ALL SLOPE AREAS, DRIVES, ROADS, STREETS, LANES AND WAYS, AND OTHER PUBLIC HIGHWAYS SHOWN UPON THE PLAN, WITH THE SAME FORCE AND EFFECT AS IF THE SAME HAD BEEN OPENED THROUGH LEGAL PROCEEDINGS, AND IN THE CONSIDERATION OF THE APPROVAL OF SAID PLAN, AND ANY FUTURE ACCEPTANCE OF SAID PUBLIC HIGHWAYS BY THE COMMONWEALTH OF PENNSYLVANIA, COUNTY OF BUTLER AND TOWNSHIP OF CLEARFIELD AND/OR WINFIELD, WE HEREBY COVENANT AND AGREE TO AND BY THESE PRESENTS DO RELEASE AND FOREVER DISCHARGE THE COMMONWEALTH OF PENNSYLVANIA, COUNTY OF BUTLER AND TOWNSHIP OF CLEARFIELD AND/OR WINFIELD, THEIR SUCCESSORS AND ASSIGNS FROM ANY LIABILITY FOR DAMAGES ARISING AND TO ARISE FROM ANY APPROPRIATION OF SAID GROUND FOR PUBLIC HIGHWAYS AND THE PHYSICAL GRADING THEREOF TO ANY GRADES THAT MAY BE ESTABLISHED HEREAFTER AT ANY TIME. THIS DEDICATION AND RELEASE SHALL BE BINDING UPON THE ABOVE NAMED PROPERTY OWNERS, THEIR HEIRS, EXECUTORS, ADMINISTRATORS AND ASSIGNS AND PURCHASERS OF LOTS IN THIS PLAN.

IN WITNESS WHEREOF, WE HEREUNTO SET OUR HAND AND SEAL THIS July 6th DAY OF ______, 2018.

x JAMES F. GREEN JR.

x ANN L. GREEN

Susan Lynn Droscha
Notary Public - Michigan
Ingham County
Acting in the County of Eaton, MI
commission expires September 20, 2020

ACKNOWLEDGMENT OF NOTARY PUBLIC

BEFORE ME, THE SUBSCRIBER, A NOTARY PUBLIC IN AND FOR THE EATON Michigan PERSONALLY APPEARED THE ABOVE NAMED, JAMES F. GREEN JR. & ANN L. GREEN, AND ACKNOWLEDGED THE FOREGOING RELEASE AND DEDICATION OF PLAN TO BE THEIR ACT AND DEED AND DESIRED THE SAME TO BE RECORDED AS SUCH.

SWORN TO AND SUBSCRIBED BEFORE ME THIS 5 DAY OF July, 2018.

MY COMMISSION EXPIRES THE 20 DAY OF Sept. 2020

Susan Lynn Droscha
NOTARY PUBLIC

REFERENCES:
GIESLER SUBDIVISION
PLAN BOOK 215 PAGE 41
H.R. GIESLER PLAN NO. 2
PLAN BOOK 314 PAGE 31

Instr:201809190019186 09/19/2018
Pages:1 F:$45.00 2:13PM
Michele Mustello T20180013790
Butler County Recorder FL

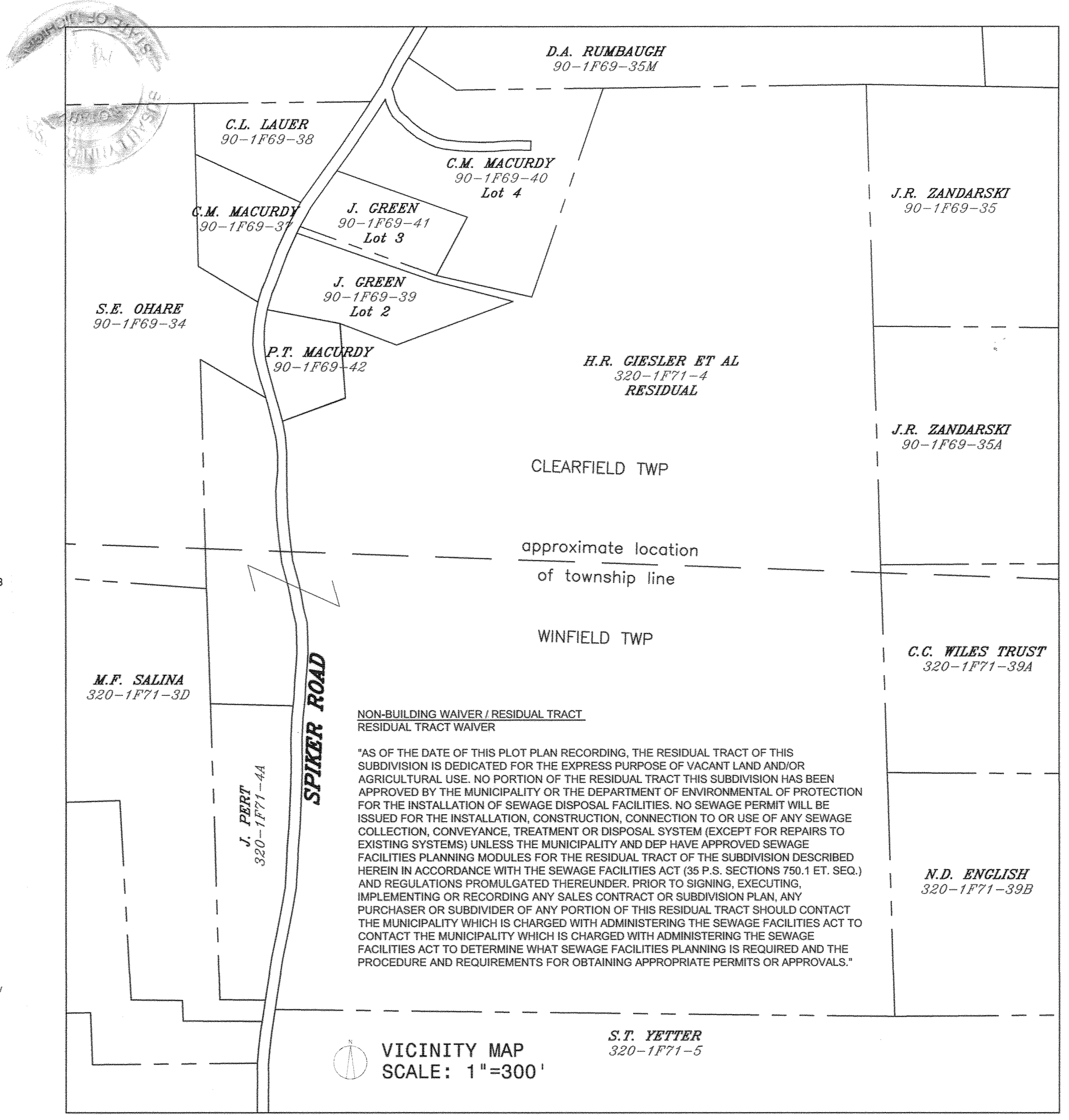

NON-BUILDING WAIVER / RESIDUAL TRACT
RESIDUAL TRACT WAIVER

"AS OF THE DATE OF THIS PLOT PLAN RECORDING, THE RESIDUAL TRACT OF THIS SUBDIVISION IS DEDICATED FOR THE EXPRESS PURPOSE OF VACANT LAND AND/OR AGRICULTURAL USE. NO PORTION OF THE RESIDUAL TRACT THIS SUBDIVISION HAS BEEN APPROVED BY THE MUNICIPALITY OR THE DEPARTMENT OF ENVIRONMENTAL OF PROTECTION FOR THE INSTALLATION OF SEWAGE DISPOSAL FACILITIES. NO SEWAGE PERMIT WILL BE ISSUED FOR THE INSTALLATION, CONSTRUCTION, CONNECTION TO OR USE OF ANY SEWAGE COLLECTION, CONVEYANCE, TREATMENT OR DISPOSAL SYSTEM (EXCEPT FOR REPAIRS TO EXISTING SYSTEMS) UNLESS THE MUNICIPALITY AND DEP HAVE APPROVED SEWAGE FACILITIES PLANNING MODULES FOR THE RESIDUAL TRACT OF THE SUBDIVISION DESCRIBED HEREIN IN ACCORDANCE WITH THE SEWAGE FACILITIES ACT (35 P.S. SECTIONS 750.1 ET. SEQ.) AND REGULATIONS PROMULGATED THEREUNDER. PRIOR TO SIGNING, EXECUTING, IMPLEMENTING OR RECORDING ANY SALES CONTRACT OR SUBDIVISION PLAN, ANY PURCHASER OR SUBDIVIDER OF ANY PORTION OF THIS RESIDUAL TRACT SHOULD CONTACT THE MUNICIPALITY WHICH IS CHARGED WITH ADMINISTERING THE SEWAGE FACILITIES ACT TO CONTACT THE MUNICIPALITY WHICH IS CHARGED WITH ADMINISTERING THE SEWAGE FACILITIES ACT TO DETERMINE WHAT SEWAGE FACILITIES PLANNING IS REQUIRED AND THE PROCEDURE AND REQUIREMENTS FOR OBTAINING APPROPRIATE PERMITS OR APPROVALS."

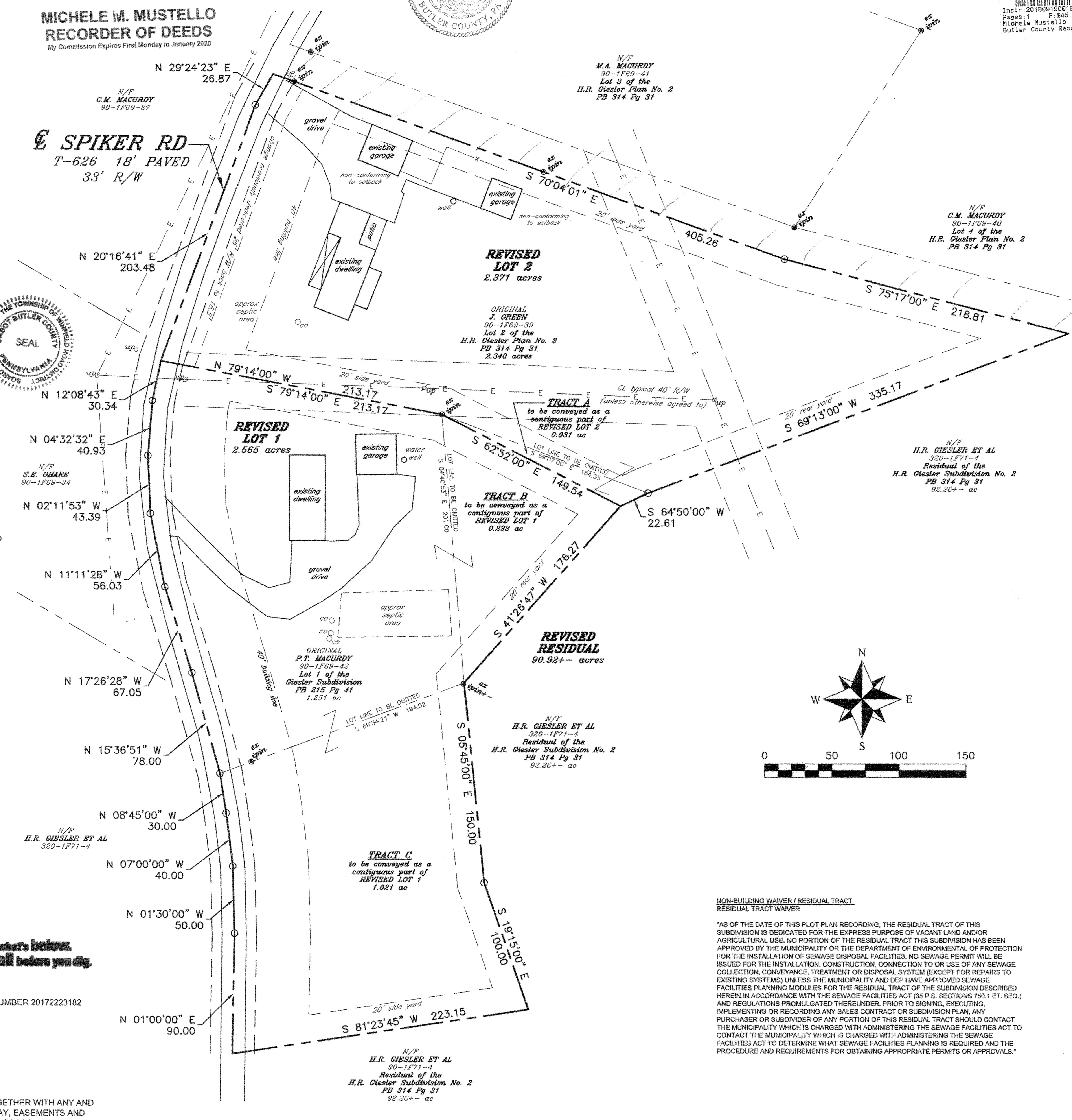

WINFIELD TOWNSHIP

MUNICIPAL DECLARATIONS

THE BOARD OF SUPERVISORS OF THE TOWNSHIP OF WINFIELD, HEREBY GIVES PUBLIC NOTICE THAT IN APPROVING THIS PLAN FOR RECORDING PURPOSES ONLY, THE TOWNSHIP OF WINFIELD ASSUMES NO OBLIGATIONS, LEGAL OR OTHERWISE, EXPRESSED OR IMPLIED EITHER TO ACCEPT SAID STREETS AS TOWNSHIP STREETS OR ROADS OR GRADE, PAVE AND CURB THE STREETS IN SAID PLAN, OR TO CONSTRUCT SEWERS THEREIN OR TO INSTALL ANY OTHER SUCH SERVICE ORDINARILY INSTALLED IN TOWNSHIP STREETS OR ROADS.

MUNICIPAL REVIEW AND APPROVAL STATEMENTS

APPROVED BY THE BOARD OF SUPERVISORS OF THE TOWNSHIP OF WINFIELD THIS 28th DAY OF JUNE, 2018.

SECRETARY

CHAIRMAN, BOARD OF SUPERVISORS

BOARD OF SUPERVISORS THE TOWNSHIP OF CABOT BUTLER COUNTY WINFIELD ROAD DISTRICT PENNSYLVANIA SEAL

REVIEWED BY THE PLANNING COMMISSION OF THE TOWNSHIP OF WINFIELD THIS 1st DAY OF August, 2018.

Marla K Klabnik
SECRETARY

David Kennedy
CHAIRMAN, PLANNING COMMISSION

CLEARFIELD TOWNSHIP

MUNICIPAL DECLARATIONS

THE BOARD OF SUPERVISORS OF THE TOWNSHIP OF CLEARFIELD, HEREBY GIVES PUBLIC NOTICE THAT IN APPROVING THIS PLAN FOR RECORDING PURPOSES ONLY, THE TOWNSHIP OF CLEARFIELD ASSUMES NO OBLIGATIONS, LEGAL OR OTHERWISE, EXPRESSED OR IMPLIED EITHER TO ACCEPT SAID STREETS AS TOWNSHIP STREETS OR ROADS OR GRADE, PAVE AND CURB THE STREETS IN SAID PLAN, OR TO CONSTRUCT SEWERS THEREIN OR TO INSTALL ANY OTHER SUCH SERVICE ORDINARILY INSTALLED IN TOWNSHIP STREETS OR ROADS.

MUNICIPAL REVIEW AND APPROVAL STATEMENTS

APPROVED BY THE BOARD OF SUPERVISORS OF THE TOWNSHIP OF CLEARFIELD THIS ~~14th~~ 10th DAY OF ~~May~~ September, 2018.

Dave Bauldoff 9/10/18
SECRETARY

9/10/18
CHAIRMAN, BOARD OF SUPERVISORS

REVIEWED BY THE PLANNING COMMISSION OF THE TOWNSHIP OF CLEARFIELD THIS 7th DAY OF May, 2018.

SECRETARY

CHAIRMAN, PLANNING COMMISSION

REAPPROVED BY THE BOARD OF SUPERVISORS OF THE TOWNSHIP OF CLEARFIELD THIS ______ DAY OF ______, 2018.

SECRETARY

CHAIRMAN
BOARD OF SUPERVISORS

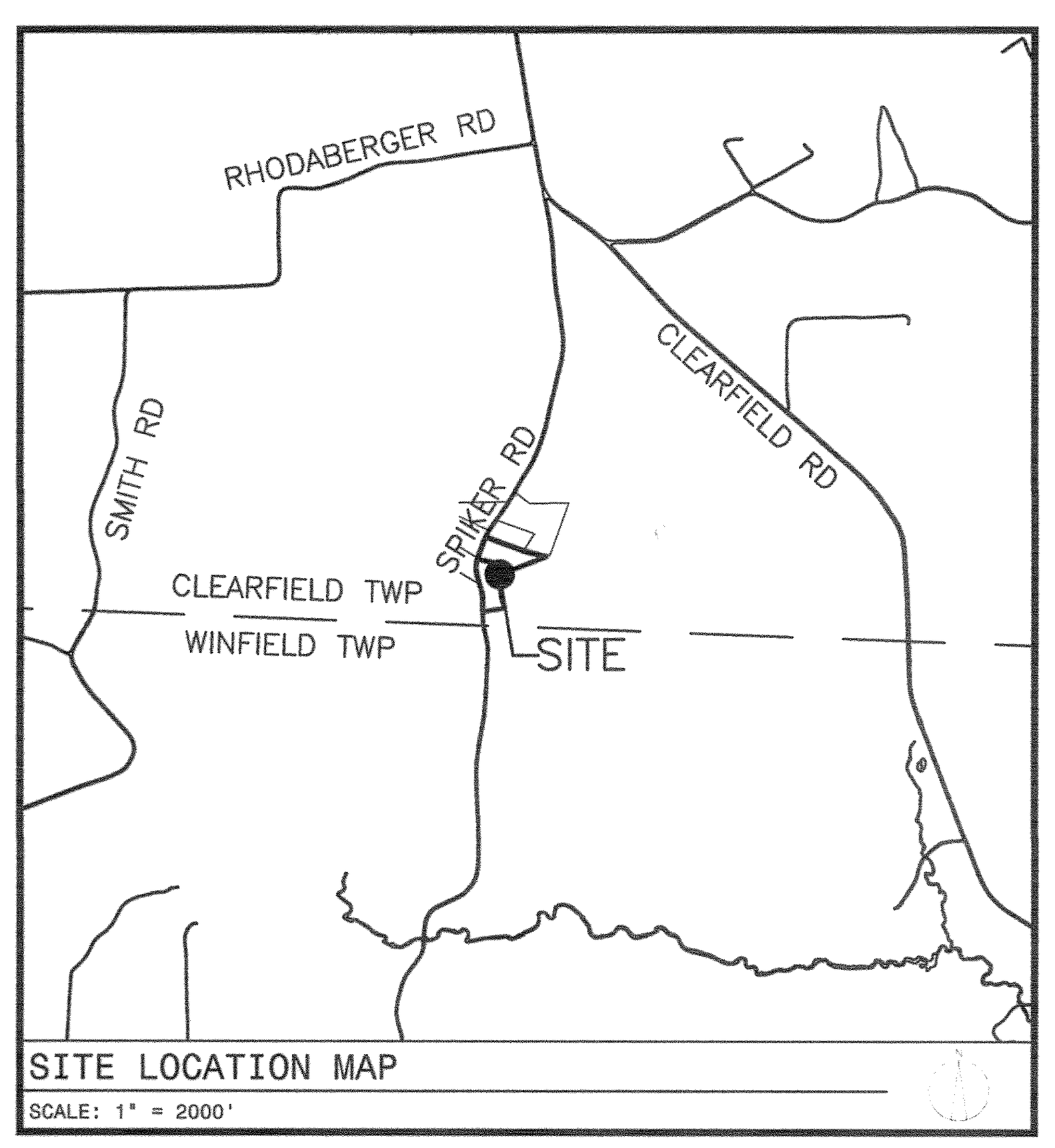

SITE LOCATION MAP
SCALE: 1" = 2000'

811. Know what's below. Call before you dig.

PA ONE CALL: SERIAL NUMBER 20172223182

NOTE: SUBJECT TO AND TOGETHER WITH ANY AND ALL EXISTING RIGHTS-OF-WAY, EASEMENTS AND CONDITIONAL CLAUSES OF RECORD OR ESTABLISHED BY DUE PROCESS.

NON-BUILDING WAIVER / RESIDUAL TRACT
RESIDUAL TRACT WAIVER

"AS OF THE DATE OF THIS PLOT PLAN RECORDING, THE RESIDUAL TRACT OF THIS SUBDIVISION IS DEDICATED FOR THE EXPRESS PURPOSE OF VACANT LAND AND/OR AGRICULTURAL USE. NO PORTION OF THE RESIDUAL TRACT THIS SUBDIVISION HAS BEEN APPROVED BY THE MUNICIPALITY OR THE DEPARTMENT OF ENVIRONMENTAL OF PROTECTION FOR THE INSTALLATION OF SEWAGE DISPOSAL FACILITIES. NO SEWAGE PERMIT WILL BE ISSUED FOR THE INSTALLATION, CONSTRUCTION, CONNECTION TO OR USE OF ANY SEWAGE COLLECTION, CONVEYANCE, TREATMENT OR DISPOSAL SYSTEM (EXCEPT FOR REPAIRS TO EXISTING SYSTEMS) UNLESS THE MUNICIPALITY AND DEP HAVE APPROVED SEWAGE FACILITIES PLANNING MODULES FOR THE RESIDUAL TRACT OF THE SUBDIVISION DESCRIBED HEREIN IN ACCORDANCE WITH THE SEWAGE FACILITIES ACT (35 P.S. SECTIONS 750.1 ET. SEQ.) AND REGULATIONS PROMULGATED THEREUNDER. PRIOR TO SIGNING, EXECUTING, IMPLEMENTING OR RECORDING ANY SALES CONTRACT OR SUBDIVISION PLAN, ANY PURCHASER OR SUBDIVIDER OF ANY PORTION OF THIS RESIDUAL TRACT SHOULD CONTACT THE MUNICIPALITY WHICH IS CHARGED WITH ADMINISTERING THE SEWAGE FACILITIES ACT TO CONTACT THE MUNICIPALITY WHICH IS CHARGED WITH ADMINISTERING THE SEWAGE FACILITIES ACT TO DETERMINE WHAT SEWAGE FACILITIES PLANNING IS REQUIRED AND THE PROCEDURE AND REQUIREMENTS FOR OBTAINING APPROPRIATE PERMITS OR APPROVALS."

PROPERTY AREAS:

EXISTING TOTALS	
Lot 2 (090-1F69-39)	2.340 ac
Lot 1 (090-1F69-42)	1.251 ac
+ Residual (320-1F71-4)	92.26 ac +/-
EXISTING TOTAL	95.85 ac
REVISED LOT 1 (090-1F69-42)	
Original Lot 1 (1F69-42)	1.251 ac
+ Tract B	0.293 ac
+ Tract C	1.021 ac
REVISED LOT 1 TOTAL	2.565 ac
REVISED LOT 2 (090-1F69-39)	
Original Lot 2 (1F69-39)	2.340 ac
+ Tract A	0.031 ac
REVISED LOT 2 TOTAL	2.371 ac
REVISED RESIDUAL (320-1F71-4)	
Original Residual (1F71-4)	92.26 ac +/-
- Tract A	0.031 ac
- Tract B	0.293 ac
- Tract C	1.021 ac
REVISED RESIDUAL TOTAL	90.92 ac +/-
REVISED TOTALS	
Revised Lot 1	2.371 ac
Revised Lot 2	2.565 ac
+ Revised Residual	90.92 ac +/-
REVISED TOTAL	95.85 ACRES

GENERAL NOTES:

1. OWNERS: 090-1F69-39 - JOSEPH GREEN & SHIRLEY K. SCOPEL
   090-1F69-42 - PATRICK T. MACURDY
   320-1F71-4 - BETTY E. GIESLER
   JAMES F. GREEN JR. & ANN L. GREEN
   JOSEPH GREEN
2. SETBACKS: FRONT LINE - 40'
   SIDE AND REAR - 20'
3. PA ONE CALL 20172223182
4. REFERENCES
   4.1. CURRENT DEEDS OF RECORD
   4.2. PREVIOUSLY RECORDED PLANS
   4.2.1. GIESLER SUBDIVISION PLAN BOOK 215 PG 41
   4.2.2. H.R. GIESLER PLAN NO. 2 PLAN BOOK 314 PG 31

REV	DESCRIPTION	BY	DATE
D	REVISIONS PER CLEARFIELD TOWNSHIP PLANNING MEETING ON 5/7/18	SDG	5/8/2018
C	REVISE TRACT 'B' PER OWNERS	SDG	4/12/2018
B	ONE CALL INFO ADDED, TYPO REVISIONS	SDG	9/11/2017
A	REVISIONS PER CLEARFIELD TOWNSHIP PLANNING MEETING ON 8/7/17	SDG	8/10/2017

GRAFF SURVEYING

GRAFF SURVEYING LLC
PO BOX 521 | SAXONBURG, PA 16056
P: 724-352-3811 F: 724-352-1059
INFO@GRAFFSURVEYING.COM
WWW.GRAFFSURVEYING.COM

PROJECT DESCRIPTION

GIESLER PLAN NO. 3

BEING A

LOT LINE REVISION

FOR

GIESLER, GREEN AND MACURDY

SITUATE
TOWNSHIPS OF CLEARFIELD & WINFIELD
BUTLER COUNTY, PENNSYLVANIA

DATE	DRAWN	CHECKED	SCALE
7/18/17	SDG	Sdg	1" = 50'

PROJECT NO.	TAX PARCEL NO.	REVISION
17-116	090-1F69-39 & 42 320-1F71-4	D

RECORDED ______ 20___

PLAN BOOK	PAGE
373	34

SHEET ______ of ______

Instr: 201809240010472 09/24/2018
Pages: 2 F: $86.00 8:52pm
Michele Mustello T20190013990
Butler County Recorder PL

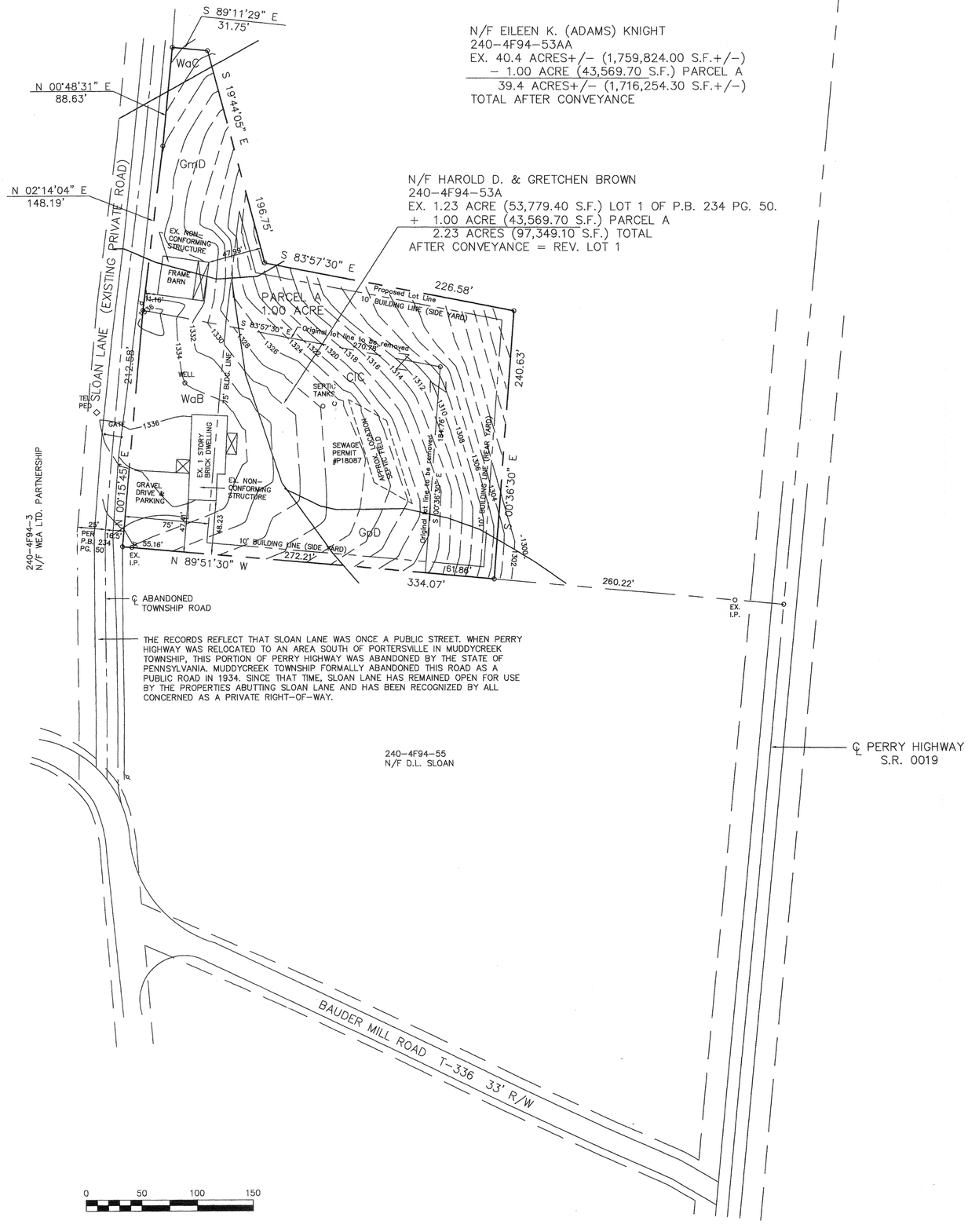

THE RECORDS REFLECT THAT SLOAN LANE WAS ONCE A PUBLIC STREET. WHEN PERRY HIGHWAY WAS RELOCATED TO AN AREA SOUTH OF PORTERSVILLE IN MUDDYCREEK TOWNSHIP, THIS PORTION OF PERRY HIGHWAY WAS ABANDONED BY THE STATE OF PENNSYLVANIA. MUDDYCREEK TOWNSHIP FORMALLY ABANDONED THIS ROAD AS A PUBLIC ROAD IN 1934. SINCE THAT TIME, SLOAN LANE HAS REMAINED OPEN FOR USE BY THE PROPERTIES ABUTTING SLOAN LANE AND HAS BEEN RECOGNIZED BY ALL CONCERNED AS A PRIVATE RIGHT-OF-WAY.

VICINITY MAP Scale: 1" = 2000'

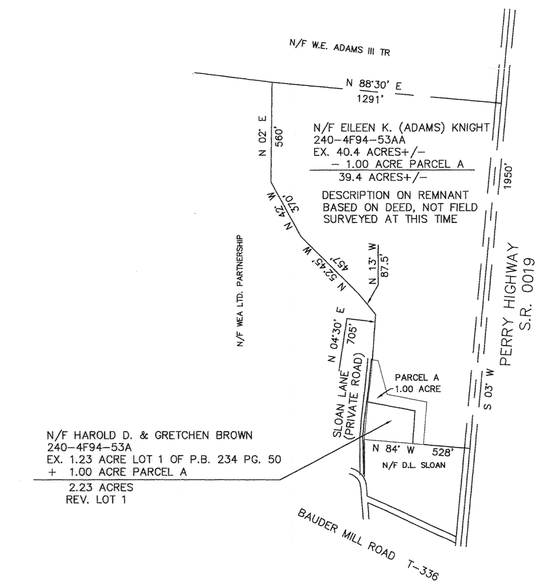

LOCATION MAP Scale: 1" = 400'

NOTES:

SUBJECT TO ANY AND ALL EXISTING RIGHTS-OF-WAY AND EASEMENTS OF RECORD.

ACCORDING TO THE FLOOD INSURANCE RATE MAP PREPARED FOR THIS TOWNSHIP, THIS PROPERTY LIES IN ZONE C - AREAS DETERMINED TO BE OUTSIDE THE 500 YEAR FLOOD PLAIN.

PROPERTY OWNERS: EILEEN (ADAMS) KNIGHT
1173 PERRY HIGHWAY
PORTERSVILLE, PA 16051

HAROLD D. & GRETCHEN BROWN
105 SLOAN LANE
HARMONY, PA 16037

SOILS TAKEN FROM SHEET 11 OF 32 OF THE SOIL SURVEY OF BUTLER COUNTY, PENNSYLVANIA.

CIC	CAVODE SILT LOAM, 8-15% SLOPES
GmD	GILPIN CHANNERY SILT LOAM, 15-25% SLOPES
GpD	GILPIN-WHARTON COMPLEX, 15-25% SLOPES
WaB	WHARTON SILT LOAM, 3-8% SLOPES
WaC	WHARTON SILT LOAM, 8-15% SLOPES

THE PURPOSE OF THIS PLAN IS A LOT LINE REVISION, NO NEW BUILDING LOTS ARE CREATED BY THIS PLAN.

REF: WILLIAM ADAMS SUBDIVISION, P.B. 234 PG. 50.

CONTOURS ARE SHOWN IN APPROXIMATE LOCATION ONLY.

PLAN BOOK	PAGE
373	35

REVISED 8/30/18 ENGINEERS REVIEW

L S J
Land Surveyors, Inc.
523 North Main Street
P.O. Box 1061
Butler, PA 16003-1061
(724) 287-6865
Cheryl A. Hughes, PLS Owner

LOT LINE REVISION

FOR: EILEEN K. (ADAMS) KNIGHT
and
HAROLD D. & GRETCHEN BROWN

SITUATE: MUDDY CREEK TWP., BUTLER CO., PA

Date 08/17/18	Scale 1" = 50'	Dwn By BEC	Ckd By CAH
Parcel No. 240-4F94-53A, 53AA		Inst. # 201410060023995 20180626001264	Service No. 18-082
Address 105 SLOAN LANE			

KNOW ALL MEN BY THESE PRESENTS, that I, Eileen K. (Adams) Knight, of the Township of Muddy Creek, of the County of Butler, Commonwealth of Pennsylvania, for myself, my heirs, executors, administrators and assigns, do hereby adopt this as my Plan of Lots of my property, situate in the Township of Muddy Creek, County of Butler, Commonwealth of Pennsylvania, and for divers advantages accruing to me, do hereby irrevocably dedicate forever, for public use for highway, drainage, sewage and utility purposes, all streets and other public property identified for dedication on the plan to the public. Any future acceptance of said public streets or property by the Commonwealth of Pennsylvania, County of Butler or Township of Muddy Creek, I, Eileen K. (Adams) Knight, hereby covenant and agree to and by these presents do release and forever discharge said Commonwealth of Pennsylvania, County of Butler, and Township of Muddy Creek, their successors or assigns from any liability for damages arising and to arise from any appropriation of said ground for public highways and other public uses, and the physical grading thereof to any grades that may be established hereafter at any time. This dedication and release shall be binding upon Eileen K. (Adams) Knight, my heirs, executors, administrators and assigns and purchasers of lots in this plan.

IN WITNESS WHEREOF, I hereunto set my hand and seal this 4

day of September, 2018.

ATTEST:

Roberta S. Hinds — Eileen K (Adams) Knight

Notary Public — Owner

My Commission Expires: 6-4-22

Commonwealth of Pennsylvania - Notary Seal
Roberta S. Hinds, Notary Public
Butler County
My commission expires June 4, 2022
Commission number 1072088
Member, Pennsylvania Association of Notaries

I, Eileen K. (Adams) Knight, fully understand and agree that the approval of the Board of Supervisors of the Township of Muddy Creek, if hereto attached, will become null and void unless this plan is recorded in the Recorder of Deeds Office of Butler County, County Court House, Butler, Pennsylvania within ninety (90) days of date of said approval.

Eileen K (Adams) Knight

Owner

COMMONWEALTH OF PENNSYLVANIA}
}SS:
COUNTY OF BUTLER}

Before me, the subscriber, a Notary Public in and for said Commonwealth and County, personally appeared Eileen K. (Adams) Knight, who being duly sworn according to law, deposes and says that she is the owner of the property shown on this plan, that the plan thereof was made at her direction, that she acknowledges the same to be her act and deed, and that she desires the same to be recorded as such.

WITNESS MY HAND AND NOTARIAL SEAL this 4 day of September, 2018.

Roberta S. Hinds
Notary Public

My Commission Expires: 6-4-22

Commonwealth of Pennsylvania - Notary Seal
Roberta S. Hinds, Notary Public
Butler County
My commission expires June 4, 2022
Commission number 1072088
Member, Pennsylvania Association of Notaries

SEAL

CERTIFICATE OF TITLE – NO MORTGAGE

I, Eileen K. (Adams) Knight, do hereby certify that the title to the property shown hereon is in the name of Eileen K. (Adams) Knight and is recorded in Instrument # 201410060023995 and that there is no mortgage on the property.

WITNESS: Darlene Brachem — OWNER: Eileen K (Adams) Knight

KNOW ALL MEN BY THESE PRESENTS, that I, Eileen K. (Adams) Knight, of the Township of Muddy Creek, of the County of Butler, Commonwealth of Pennsylvania, for myself, my heirs, executors, administrators and assigns, and for my grantees and their subsequent purchasers, do hereby accept full and complete responsibility, liability, expense and provision of facilities for the control of stormwater drainage over, across and through this plan of lots until such time as I, my heirs, executors, administrators and assigns construct stormwater drainage facilities in accordance with the Township's specifications and requirements and the same is officially accepted by action of the Board of Supervisors of Muddy Creek Township, and until such formal acceptance, I for myself, my heirs, executors, administrators and assigns do hereby release the Township of Muddy Creek from any responsibility in connection therewith. This acceptance of responsibility shall be binding upon my heirs, executors, administrators and assigns and all purchasers of lots in this plan of subdivision.

IN WITNESS WHEREOF, I hereunto set my hand and seal this 4

day of September, 2018.

ATTEST:

Roberta S. Hinds — Eileen K (Adams) Knight

Notary Public — Owner

My Commission expires: 6-4-22

Owner

Commonwealth of Pennsylvania - Notary Seal
Roberta S. Hinds, Notary Public
Butler County
My commission expires June 4, 2022
Commission number 1072088
Member, Pennsylvania Association of Notaries

KNOW ALL MEN BY THESE PRESENTS, that we, Harold D. and Gretchen Brown, of the Township of Muddy Creek, of the County of Butler, Commonwealth of Pennsylvania, for ourselves, our heirs, executors, administrators and assigns, do hereby adopt this as our Plan of Lots of our property, situate in the Township of Muddy Creek, County of Butler, Commonwealth of Pennsylvania, and for divers advantages accruing to us, do hereby irrevocably dedicate forever, for public use for highway, drainage, sewage and utility purposes, all streets and other public property identified for dedication on the plan to the public. Any future acceptance of said public streets or property by the Commonwealth of Pennsylvania, County of Butler or Township of Muddy Creek, we, Harold D. and, Gretchen Brown, hereby covenant and agree to and by these presents do release and forever discharge said Commonwealth of Pennsylvania, County of Butler, and Township of Muddy Creek, their successors or assigns from any liability for damages arising and to arise from any appropriation of said ground for public highways and other public uses, and the physical grading thereof to any grades that may be established hereafter at any time. This dedication and release shall be binding upon Harold D. and Gretchen Brown, our heirs, executors, administrators and assigns and purchasers of lots in this plan.

IN WITNESS WHEREOF, we hereunto set our hands and seals this _____

day of September 4, 2018.

ATTEST:

Roberta S. Hinds — +Harold D Brown

Notary Public — Owner

My Commission Expires: 6-4-22

Commonwealth of Pennsylvania - Notary Seal
Roberta S. Hinds, Notary Public
Butler County
My commission expires June 4, 2022
Commission number 1072088
Member, Pennsylvania Association of Notaries

+Gretchen Brown

Owner

We, Harold D. and Gretchen Brown, fully understand and agree that the approval of the Board of Supervisors of the Township of Muddy Creek, if hereto attached, will become null and void unless this plan is recorded in the Recorder of Deeds Office of Butler County, County Court House, Butler, Pennsylvania within ninety (90) days of date of said approval.

Harold D Brown — +Gretchen Brown

Owner — Owner

COMMONWEALTH OF PENNSYLVANIA}
}SS:
COUNTY OF BUTLER}

Before me, the subscriber, a Notary Public in and for said Commonwealth and County, personally appeared Harold D. and Gretchen Brown, who being duly sworn according to law, deposes and says that they are the owners of the property shown on this plan, that the plan thereof was made at their direction, that they acknowledge the same to be their act and deed, and that they desire the same to be recorded as such.

WITNESS MY HAND AND NOTARIAL SEAL this 4 day of September, 2018.

Roberta S. Hinds
Notary Public

My Commission Expires: 6-4-22

Commonwealth of Pennsylvania - Notary Seal
Roberta S. Hinds, Notary Public
Butler County
My commission expires June 4, 2022
Commission number 1072088
Member, Pennsylvania Association of Notaries

SEAL

CERTIFICATE OF TITLE – NO MORTGAGE

We, Harold D. and Gretchen Brown, do hereby certify that the title to the property shown hereon is in the names of Harold D. and Gretchen Brown and is recorded in Instrument # 201806260012646 and that there is no mortgage on the property.

WITNESS: Roberta S. Hinds — OWNER: +Harold D Brown, +Gretchen Brown

KNOW ALL MEN BY THESE PRESENTS, that we, Harold D. and Gretchen Brown, of the Township of Muddy Creek, of the County of Butler, Commonwealth of Pennsylvania, for ourselves, our heirs, executors, administrators and assigns, and for our grantees and their subsequent purchasers, do hereby accept full and complete responsibility, liability, expense and provision of facilities for the control of stormwater drainage over, across and through this plan of lots until such time as we, our heirs, executors, administrators and assigns construct stormwater drainage facilities in accordance with the Township's specifications and requirements and the same is officially accepted by action of the Board of Supervisors of Muddy Creek Township, and until such formal acceptance, we for ourselves, our heirs, executors, administrators and assigns do hereby release the Township of Muddy Creek from any responsibility in connection therewith. This acceptance of responsibility shall be binding upon our heirs, executors, administrators and assigns and all purchasers of lots in this plan of subdivision.

IN WITNESS WHEREOF, we hereunto set our hands and seals this _____

day of September 4, 2018.

ATTEST:

Roberta S. Hinds — +Harold D Brown

Notary Public — Owner

My Commission expires: 6-4-22

+Gretchen Brown

Commonwealth of Pennsylvania - Notary Seal
Roberta S. Hinds, Notary Public
Butler County
My commission expires June 4, 2022
Commission number 1072088
Member, Pennsylvania Association of Notaries

MUDDY CREEK TOWNSHIP SUPERVISORS OFFICIAL SEAL BUTLER CO. PA

I, Cheryl A. Hughes, a Professional Land Surveyor of the Commonwealth of Pennsylvania, do hereby certify that this plan as shown hereon is based upon actual field survey of the land described and that all angles, distances, and courses are correctly shown, that the monuments and markers as shown on the plat have been set, and to the best of my knowledge, that this plan correctly represents the lots, lands, streets and highways as surveyed and plotted by me for the owners or agents.

SEAL

DATE August 30, 2018 — Cheryl A. Hughes

Cheryl A. Hughes, P.L.S.
Registration No. SU-32490-E

COMMONWEALTH OF PENNSYLVANIA — REGISTERED PROFESSIONAL — Cheryl A. Hughes — LAND SURVEYOR SU-32490-E

This plan has been recommended for approval by the Planning Commission of the Township of Muddy Creek, Butler County, Commonwealth of Pennsylvania on this 4th day of September, 2018.

ATTEST: Kelly Livermore

Secretary — VICE CHAIRMAN

The Board of Supervisors of the Township of Muddy Creek hereby gives public notice that it is approving this plan for recording purposes only. The Board of Supervisors has not accepted dedication of any streets, lands or public facilities and has no obligation, legal or otherwise, to improve or maintain such streets, lands or public facilities.

This plan approved by action of the Board of Supervisors of the Township of Muddy Creek, Butler County, Pennsylvania on this 19th day of September, 2018.

ATTEST: Kelly Livermore

Secretary, Board of Supervisors — Chairman, Board of Supervisors

Reviewed with or without comments by the Butler County Planning Commission this 29TH day of AUG., 20____.

Secretary — Chairman

SEAL

BUTLER COUNTY PLANNING COMMISSION

COMMONWEALTH OF PENNSYLVANIA}
}SS:
COUNTY OF BUTLER.}

Recorded in the office for the recording of deeds, plats, etc. in said County at Plan Book 373 page 35-36

Given under my hand and seal this 24 day of September, 2018.

Michele M. Mustello
Recorder

MICHELE M. MUSTELLO
RECORDER OF DEEDS
My Commission Expires First Monday in January 2020

RECORDER OF DEEDS BUTLER COUNTY, PA

Sheet 2 of 2 — REVISED 8/30/18 ENGINEERS REVIEW

L S J
Land Surveyors, Inc.
523 North Main Street
P.O. Box 1061
Butler, PA 16003-1061
(724) 287-6865
Cheryl A. Hughes, PLS Owner

LOT LINE REVISION
FOR: EILEEN K. (ADAMS) KNIGHT and HAROLD D. & GRETCHEN BROWN
SITUATE: MUDDY CREEK TWP., BUTLER CO., PA

PLAN BOOK	PAGE
373	36

Date 08/17/18	Scale 1" = 50'	Dwn By BEC	Ckd By CAH	
Parcel No. 240-4F94-53A, 53AA		Inst. # 201410060023995 201806260012646		Service No. 18-082
Address 105 SLOAN LANE				

BUTLER COUNTY RECORDER OF DEEDS

BOROUGH OF SEVEN FIELDS COUNCIL

REGISTERED SURVEYOR

COMMONWEALTH OF PENNSYLVANIA REGISTERED PROFESSIONAL DAVID W. LAPEARLE LAND SURVEYOR 34201-E

NOTARY PUBLIC

COMMONWEALTH OF PENNSYLVANIA
NOTARIAL SEAL
Paula K. Rouda, Notary Public
Adams Twp., Butler County
My Commission Expires Aug. 15, 2021
MEMBER, PENNSYLVANIA ASSOCIATION OF NOTARIES

BOROUGH ENGINEER

COMMONWEALTH OF PENNSYLVANIA REGISTERED PROFESSIONAL JOHN R BALEWSKI ENGINEER PE049873E

CORPORATE ADOPTION

KNOW ALL MEN BY THESE PRESENTS:
That GROUP 7 DEVELOPMENT, LLC, a Pennsylvania non-profit corporation, by virtue of a Resolution of its Board of Directors, does hereby hereby adopt this Plan of Subdivision of its property, situated in the Borough of Seven Fields, County of Butler, Commonwealth of Pennsylvania, and for diver advantages accruing to it, does hereby dedicate forever, for public use for highway, drainage, sewage and utility purposes, all drives, roads, lands, rights-of-way, easements, ways and other public highways shown upon the plan, with the same force and effect as if the same had been opened through legal proceedings and in consideration of the approval of said plan and any future acceptance of said public highways, rights-of-way and easements by the Borough of Seven Fields, County of Butler, GROUP 7 DEVELOPMENT, LLC hereby covenants and agrees to and by these presents do release and forever discharge the Borough of Seven Fields, County of Butler, of Butler County, its successors or assigns from any liability for damages arising and to arise from the appropriation of said ground for public highways, and other public uses and the physical grading thereof to any grades that may be established. This dedication and release shall be binding upon GROUP 7 DEVELOPMENT, LLC its successors and assigns and purchasers of lots in this plan.

IN WITNESS WHEREOF, the said Corporation has caused its Corporate seal to be affixed by the hand of its President and same to attested Secretary, this 3 day of August, A.D. 20 18.

GROUP 7 DEVELOPMENT, LLC(SEAL)

ATTEST:

Secretary ______ (SEAL) President ______ (SEAL)

CORPORATE ACKNOWLEDGEMENT

COMMONWEALTH OF PENNSYLVANIA } SS:
COUNTY OF ~~ALLEGHENY~~ Butler }

On this 3 day of August, A.D. 20 18 before me, a Notary Public and for said County and Commonwealth, personally appeared Christopher J. Kaclik of GROUP 7 DEVELOPMENT, LLC, a Pennsylvania non-profit corporation, who being duly sworn, deposes and says that he was personally present at the execution of the adoption, release and dedication and saw the common and corporate seal of the said Corporation duly sign and sealed by and as for the act and deed of the said GROUP 7 DEVELOPMENT, LLC for the uses and purposes therein mentioned, and that the name of this deponent subscribed to the said released and dedication President of GROUP 7 DEVELOPMENT, LLC in attestation of the due execution and delivery of said release and dedication of this deponent's own and proper and respective handwriting.

Christopher J. Kaclik (SEAL) ______ (SEAL)
(Name of Officer) (Title of Officer)

Sworn to and subscribed before me the day and date above written.
WITNESS MY HAND AND NOTARIAL SEAL this 3 day of August, 20 18.

Paula K Rouda SEAL
Notary Public

My Commission Expires the 15 day of August, 20 21.

CERTIFICATION OF TITLE AND CONCURRENT MORTGAGE

I hereby certify that the title to the property contained in the Enclave at Highpointe is in the name of GROUP 7 DEVELOPMENT, LLC, and is recorded in Instrument #201803220005376.

Paula K Rouda ______
Witness Owner

Enterprise Bank mortgagee of the property contained in the Enclave at Highpointe consents to the recording of said plan and to the dedications and all other matters appearing on the plan.

Paula K Rouda ______
Witness Name, Title and Mortgagee
Randy Uvridow V.P.

SURVEYOR CERTIFICATION

I, David W. LaPearle, a Professional Land Surveyor of the Commonwealth of Pennsylvania, do hereby certify that this plan shown hereon is based upon actual field survey of the land described and that all angles, distances, and courses are correctly shown, that the monuments and markers as shown on the plat have been, or will be set, and to the best of my knowledge, that this plan correctly represents the lots, lands, streets, and highways as surveyed and plotted by me for the owners or agents.

8/2/18 David W. LaPearle
Date David W. LaPearle, P.L.S.
(SEAL)

BUTLER COUNTY PLANNING COMMISSION APPROVAL

~~Approved~~ reviewed by the Butler County Planning Commission this 19 day of September, 20 18.

Chris Davey Frank E. Uhl #18175
(Secretary) (Chairman)

BUTLER COUNTY PLANNING COMMISSION

MUNICIPAL APPROVAL

Reviewed and approved by the Borough of Seven Fields Council this 9th day of July, 20 18.

______ ______
(Secretary) (Chairman)

BOROUGH ENGINEER

Reviewed and approved by the Borough of Seven Fields Engineer this 16th day of August, 20 18.

8/16/18 John R Balewski
Date (Engineer)
(SEAL)

PROOF OF RECORDING

COMMONWEALTH OF PENNSYLVANIA } SS:
COUNTY OF BUTLER }

Recorded in the office for the recording of deeds, plats and plans in said County, in Plan Book Volume 373 Page(s) 37-38.
Given under my hand and seal this 25 day of September, 20 18.

Michele M. Mustello

MICHELE M. MUSTELLO
RECORDER OF DEEDS
My Commission Expires First Monday in January 2020

SITE DATA CHART

ZONING REQUIREMENTS		
ZONING DISTRICT	PLANNED ECONOMIC DEVELOPMENT DISTRICT	
	REQUIRED	PROVIDED
MIN. LOT AREA		
NON-RESIDENTIAL	0.50 ACRE	0.69 ACRES
RESIDENTIAL	1,200 SF	2,252 SF
FLOOR AREA RATIO		
NON-RESIDENTIAL	0.35	0.20
RESIDENTIAL	1.25	1.20
MIN. LOT WIDTH		
NON-RESIDENTIAL	100 FT	150 FT
RESIDENTIAL	22 FT	22 FT
MAX. BUILDING HEIGHT		
NON-RESIDENTIAL	50 FT	50 FT
TOWNHOUSE	35 FT	35 FT
GARDEN APARTMENT	35 FT	N/A
MIN. FRONT YARD SETBACK		
NON-RESIDENTIAL	50 FT	50 FT (SEE NOTE 3)
RESIDENTIAL	10 FT	10 FT
MIN. SIDE YARD SETBACK		
NON-RESIDENTIAL INTERIOR LOT	15 FT	15 FT
NON-RESIDENTIAL, ABUTTING RESIDENTIAL	50 FT	50 FT
TOWNHOUSE	0 FT	0 FT
BETWEEN TOWNHOUSE BUILDINGS	25 FT	25 FT
MIN. REAR YARD SETBACK		
NON-RESIDENTIAL	25 FT OR BLDG HT, WHICHEVER IS GREATER	25 FT OR BLDG HT, WHICHEVER IS GREATER
RESIDENTIAL	10 FT	10 FT
MAX. IMPERVIOUS COVERAGE	80% FOR MIXED USE W/ RESIDENTIAL	55%
BUFFER ADJOINING RESIDENTIAL USE	20 FT	N/A
MIN RESIDENTIAL AREA IN MIXED USE DEVELOPMENT	25%	51%

General Notes:

1. MERIDIAN SHOWN HEREON IS BASED ON RECORDED BEARINGS FOR HIGHPOINTE DRIVE ALONG PARCEL I IN THE NORTHERNPOINTE CENTER NORTH RECORDED IN PLAN BOOK VOLUME 225 PAGE 7. ALL GPS OBSERVATIONS WHERE CONDUCTED IN PENNSYLVANIA SOUTH STATE PLANE NAD 83.

2. HORIZONTAL CONTROL SHOWN HEREON IS PENNSYLVANIA SOUTH STATE PLANE NAD 83. VERTICAL CONTROL IS NAVD 88.

3. THE SETBACK ALONG ROUTE 228 WAS SET AT 30' BY SEVEN FIELDS BOROUGH AS PART OF ADDITIONAL RIGHT-OF-WAY ACQUISITION FROM THE TRACT BY THE BOROUGH. SEE REVISION TO PARCEL I OF THE NORTHPOINTE CENTER NORTH PLAN RECORDED DECEMBER 16, 2005, PB 290, PAGE 1.

4. THE REAR YARD SETBACK FOR THE NON-RESIDENTIAL BUILDINGS IS SHOWN AT 25 FEET (EXCEPT FOR THE MEDICAL BUILDING - SEE NOTE 3). IF THE BUILDINGS EXCEED 25 FEET, THE SETBACK MUST BE INCREASED TO EQUAL THE BUILDING HEIGHT, WITH A MAXIMUM HEIGHT / SETBACK OF 50 FEET.

5. THE 3 STORY MEDICAL OFFICE BUILDING LOT SHOWS A 50' REAR YARD SETBACK TO ALLOW THE BUILDING TO BE CONSTRUCTED TO THE MAXIMUM ALLOWABLE HEIGHT, IF DESIRED.

Instr:201809250019647 09/25/2018
Pages:2 F:$85.00 4:08PM
Michele Mustello T20180014127
Butler County Recorder FL

General Location Map: Mars, PA USGS Quadrangle Scale: 1"=2000'

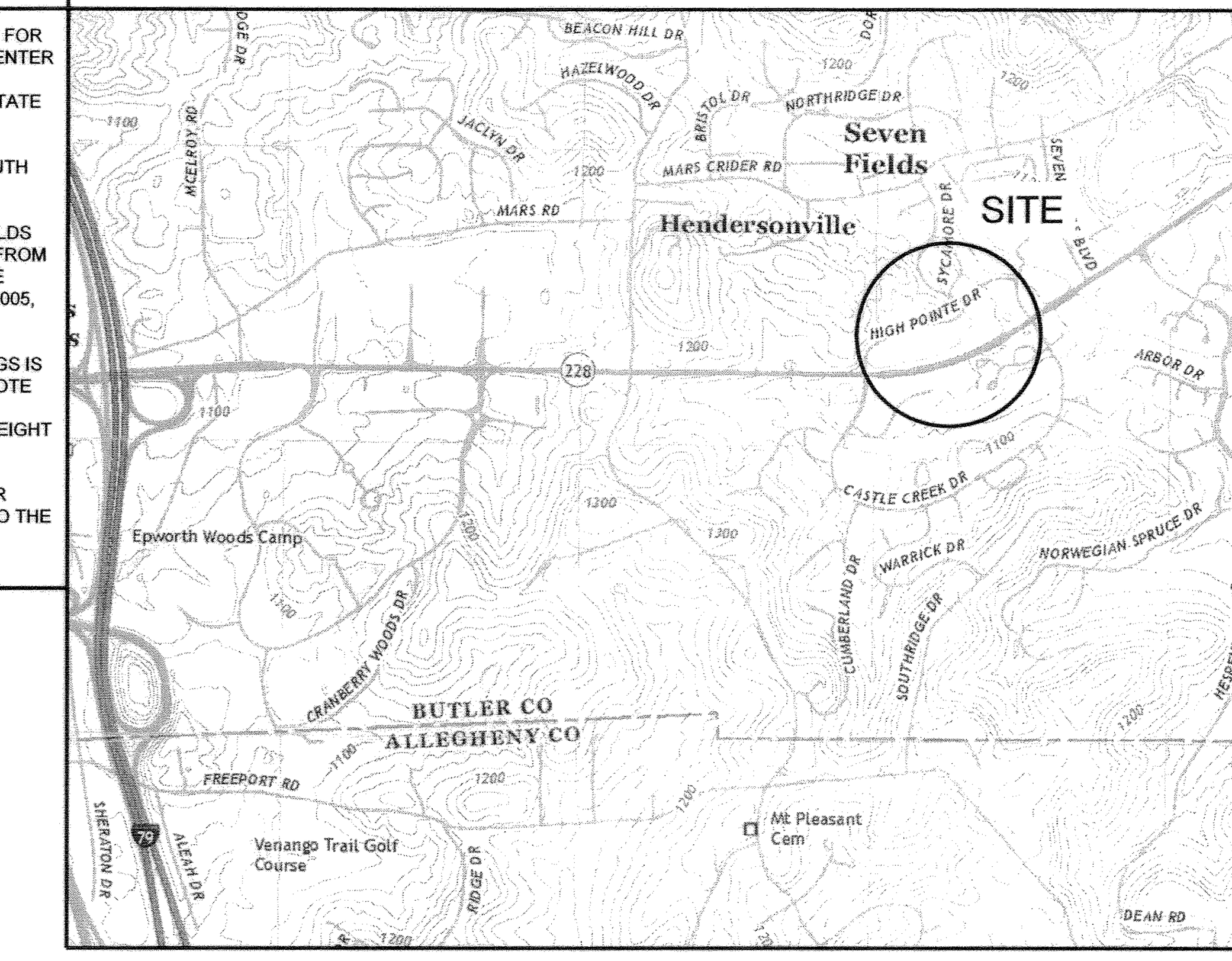

PLAN BOOK	PAGE
373	37

811 Know what's below. Call before you dig.

THE LOCATIONS OF EXISTING UNDERGROUND UTILITIES ARE SHOWN IN AN APPROXIMATE WAY ONLY AND HAVE NOT BEEN INDEPENDENTLY VERIFIED BY THE OWNER OR ITS REPRESENTATIVE. THE CONTRACTOR SHALL DETERMINE THE EXACT LOCATION OF ALL EXISTING UTILITIES BEFORE COMMENCING WORK, AND AGREES TO BE FULLY RESPONSIBLE FOR ANY AND ALL DAMAGES WHICH MIGHT BE OCCASIONED BY THE CONTRACTOR'S FAILURE TO EXACTLY LOCATE AND PRESERVE ANY AND ALL UNDERGROUND UTILITIES.

NORTH

Horizontal Scale
0 40' 80'
(Feet)
1 inch = 40 ft.

Date:	Revision Description:	By:
4/25/18	PRELIMINARY AND FINAL LAND DEVELOPMENT SUBMISSION TO SEVEN FIELDS BOROUGH	GLF
6/25/18	REVISED PER BOROUGH ENGINEER COMMENTS	MWS

Professional Seal

Prepared By:
Sheffler & Company, Inc.
ENGINEERING • SURVEYING
1712 Mt. Nebo Road
Sewickley, PA 15143
Office Phone: 412-219-4509
Email: Info@ShefflerCo.com

Proposed Mixed-Use Residential & Retail Development
Enclave at Highpointe

Prepared For:
Kaclik Builders

Situate In:
Borough of Seven Fields, Butler County, Pennsylvania

SUBDIVISION PLAN

DRAWING SCALE:	1" = 40'	DRAWN BY:	MWS
DATE ISSUED:	04/25/2018	REVIEWED BY:	DWL
PROJECT JOB#:	3681	FIELD BOOK #:	
CADD#:	3681 Sub_Plan.dwg		

Kaclik Builders
Attn: Chris Kaclik
1272 Mars-Evans City Road #101
Evans City, PA 16033
Email: cjk1@zoominternet.net

Sheet No.
REC-1

STORM SEWER EASEMENT TABLE (PERIMETER OF EASEMENT)

Line #	Direction	Length	Line #	Direction	Length	Line #	Direction	Length	Line #	Direction	Length	Line #	Direction	Length
SS-1	S 54°54'38" W	67.49	SS-23	S 26°32'54" E	99.85	SS-45	N 15°17'34" W	97.34	SS-67	S 25°38'07" E	20.00	SS-89	S 75°19'06" W	23.70
SS-2	S 22°33'40" W	79.30	SS-24	S 67°37'09" W	36.85	SS-46	S 74°07'05" W	10.11	SS-68	N 64°21'53" E	153.09	SS-90	N 24°14'55" W	77.70
SS-3	S 6°27'11" E	91.05	SS-25	S 22°22'51" E	2.00	SS-47	N 15°52'55" W	32.93	SS-69	N 73°20'24" E	3.90	SS-91	S 69°49'15" W	4.96
SS-4	N 80°39'23" E	100.86	SS-26	S 67°37'09" W	110.00	SS-48	S 74°42'26" W	20.00	SS-70	S 23°51'39" E	21.03	SS-92	N 74°42'26" E	2.95
SS-5	S 31°23'50" E	65.10	SS-27	N 22°22'51" W	69.95	SS-49	S 15°52'55" E	70.00	SS-71	N 74°42'26" E	20.23	SS-93	N 03°42'31" W	29.19
SS-6	N 74°05'33" E	290.31	SS-28	S 63°20'07" W	11.07	SS-50	S 74°42'26" W	25.16	SS-72	N 23°51'39" W	23.25	SS-94	N 85°32'04" E	120.00
SS-7	S 45°21'41" W	57.97	SS-29	S 77°40'25" W	9.10	SS-51	S 15°17'34" E	2.00	SS-73	N 65°52'00" E	99.04	SS-95	N 04°27'56" W	2.00
SS-8	S 22°50'22" E	29.67	SS-30	S 22°22'51" E	74.92	SS-52	S 74°42'26" W	110.00	SS-74	S 2°16'50" E	13.56	SS-96	N 85°32'04" E	32.26
SS-9	N 82°27'11" E	20.73	SS-31	S 74°44'27" W	36.07	SS-53	S 74°42'26" W	25.00	SS-75	N 74°42'26" E	20.53	SS-97	S 07°10'31" E	22.02
SS-10	N 22°50'22" W	21.60	SS-32	S 15°15'33" E	2.00	SS-54	S 74°42'26" W	133.33	SS-76	N 2°16'50" W	17.66	SS-98	S 85°32'04" W	132.74
SS-11	N 45°21'41" E	62.76	SS-33	S 74°44'27" W	119.73	SS-55	N 31°23'50" W	55.65	SS-77	N 75°19'06" E	89.47	SS-99	S 01°01'27" W	5.30
SS-12	S 15°17'34" E	45.26	SS-34	N 14°01'53" W	71.24	SS-56	S 80°39'23" W	93.30	SS-78	S 14°03'20" E	16.25	SS-100	N 67°57'45" E	13.32
SS-13	N 74°42'26" E	209.10	SS-35	S 75°58'07" W	20.00	SS-57	N 6°27'11" W	64.83	SS-79	N 74°42'26" E	148.77	SS-101	N 26°45'56" W	23.10
SS-14	N 62°07'59" E	129.87	SS-36	S 14°01'53" E	93.92	SS-58	N 22°33'40" E	74.62	SS-80	N 84°07'56" E	53.70	SS-102	N 62°38'38" E	63.52
SS-15	S 9°54'00" E	27.14	SS-37	S 74°11'59" W	98.31	SS-59	N 67°26'20" W	19.78	SS-81	N 4°33'19" W	22.00	SS-103	N 29°44'33" W	22.02
SS-16	N 81°41'17" E	18.61	SS-38	N 12°50'13" W	34.67	SS-60	S 69°13'55" W	15.08	SS-82	S 84°30'55" W	32.05	SS-104	S 62°38'38" W	31.98
SS-17	N 74°11'59" E	124.42	SS-39	N 15°17'34" W	96.50	SS-61	S 24°14'55" E	79.79	SS-83	S 5°29'05" E	2.00	SS-105	S 27°21'22" W	2.00
SS-18	N 20°37'05" W	18.03	SS-40	S 74°42'26" W	29.00	SS-62	S 65°52'00" W	113.09	SS-84	S 84°30'55" W	110.00	SS-106	S 62°38'38" W	66.00
SS-19	N 73°50'07" E	173.85	SS-41	S 74°42'26" W	28.98	SS-63	S 73°20'24" W	23.78	SS-85	S 81°19'36" W	23.90	SS-107	N 27°21'22" W	2.00
SS-20	N 66°10'02" E	173.29	SS-42	S 15°16'55" E	109.72	SS-64	S 64°21'53" W	22.00	SS-86	S 75°19'06" W	22.00	SS-108	S 62°38'38" W	32.44
SS-21	N 26°32'54" W	128.67	SS-43	S 62°07'59" W	93.91	SS-65	S 25°38'07" E	2.00	SS-87	S 14°40'54" E	2.00	SS-109	S 27°28'01" E	22.00
SS-22	S 63°27'06" W	20.00	SS-44	S 74°42'26" W	186.90	SS-66	S 64°21'53" W	120.00	SS-88	S 75°19'06" W	88.00	SS-110	N 62°38'38" E	47.78
												SS-111	S 26°45'56" E	19.19

Sanitary Sewer Easement Table

Line #	Direction	Length
SAN1	S 53°54'31" W	75.32'
SAN2	S 86°03'42" E	68.51'
SAN3	S 78°39'52" E	68.62'
SAN4	N 74°34'51" E	221.24'
SAN5	N 75°20'08" E	210.45'
SAN6	N 75°26'06" E	225.64'
SAN7	N 80°33'46" E	254.17'
SAN8	N 19°52'28" E	79.71'
SAN9	N 53°29'57" W	84.03'

NOTE:
SANITARY SEWER EASEMENT IS DEFINED BY THE ℄ OF THE 20' WIDE EASEMENT

Water Line Easement Table

Line #	Direction	Length
W1	S 64°21'53" W	10.00
W2	S 25°20'07" E	101.67
W3	S 10°17'34" E	28.40
W4	N 79°42'26" E	118.33
W5	N 78°28'33" E	33.66
W6	N 74°43'05" E	557.24
W7	S 79°49'35" E	59.88
W8	N 77°40'25" E	49.92
W9	N 77°40'25" E	92.35
W10	N 63°20'07" E	32.29
W11	N 62°20'26" E	111.96
W12	N 25°22'31" W	45.14'
W13	N 56°18'58" W	163.56'

NOTE:
WATERLINE EASEMENT IS DEFINED BY THE ℄ OF THE 20' WIDE EASEMENT

ACCESS & UTILITY EASEMENT TABLE (PERIMETER OF EASEMENT)

Line #	Direction	Length	Radius	Length	Chord Direction	Chord Length	Line #	Direction	Length
A1	S 64°21'53" W	27.22					A21	S 62°20'26" W	14.26
A2			226.62	9.18	S62° 18' 52"W	9.18	A22	N 67°57'45" W	41.89
A3	S 25°19'59" E	58.70					A23	S 80°33'46" W	95.19
A4			86.37	45.45	S40° 24' 28"E	44.93	A24	N 85°27'15" W	14.92
A5	S 34°06'48" W	9.99					A25	S 72°44'43" W	43.08
A6			96.00	83.28	S80° 26' 26"E	80.69	A26	S 80°54'57" W	22.07
A7	N 74°42'26" E	209.42					A27	N 67°43'59" W	24.63
A8	S 15°17'34" E	8.00					A28	S 74°42'26" W	58.32
A9	N 74°42'26" E	319.55					A29	N 4°27'56" W	109.01
A10	N 74°42'26" E	123.88					A30	S 85°32'47" W	38.90
A11	N 81°11'07" E	53.18					A31	S 4°33'19" E	115.41
A12	N 74°42'26" E	5.39					A32	S 74°42'26" W	49.84
A13	S 85°06'13" E	41.11					A33	N 15°25'26" W	25.00
A14			121.00	58.12	N81° 22' 51"E	57.57	A34	S 74°42'26" W	280.53
A15	N 67°37'09" E	222.71					A35	S 18°07'57" E	25.03
A16	N 29°39'34" W	72.33					A36	S 74°42'26" W	97.38
A17	S 54°39'44" W	24.35					A37	S 75°57'16" W	34.79
A18	S 62°20'26" W	21.11					A38	S 79°42'26" W	53.48
A19	N 56°18'58" W	53.67					A39	S 64°21'53" W	67.96
A20	S 19°52'28" W	69.75					A40	S 79°30'15" W	5.58
							A41	N 25°20'07" W	96.54

LEGEND

- ACCESS AND UTILITY EASEMENT
- STORM SEWER EASEMENT
- SANITARY SEWER EASEMENT
- WATERLINE EASEMENT
- DRAINAGE AND UTILITY EASEMENT TO BE EXTINGUISHED

NOTES:
ALL PROPOSED STORM SEWERS AND DETENTION FACILITY ARE TO REMAIN PRIVATE EXCEPT FOR THE STORM SEWERS CONVEYING RUNOFF FROM HIGHPOINTE DRIVE.

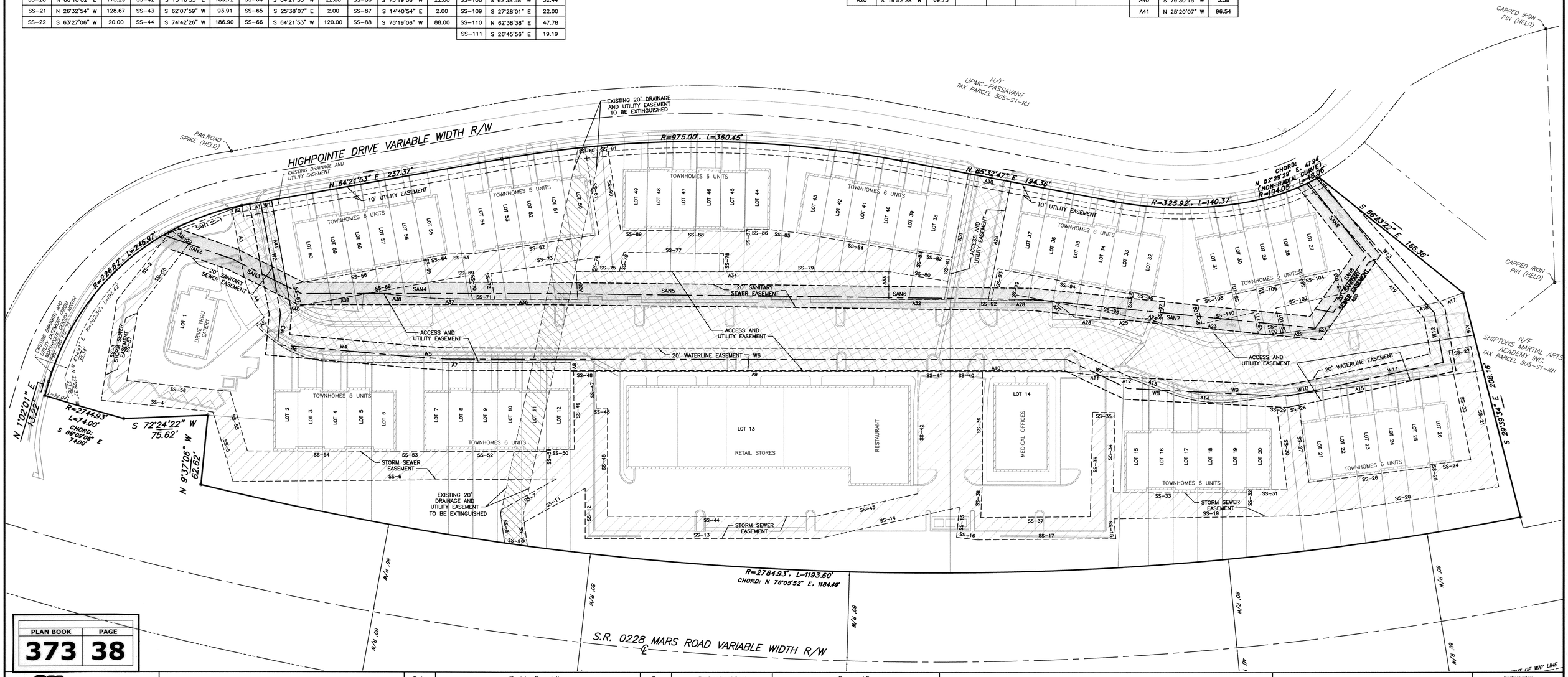

PLAN BOOK	PAGE
373	38

811 Know what's below. Call before you dig.

THE LOCATIONS OF EXISTING UNDERGROUND UTILITIES ARE SHOWN IN AN APPROXIMATE WAY ONLY AND HAVE NOT BEEN INDEPENDENTLY VERIFIED BY THE OWNER OR ITS REPRESENTATIVE. THE CONTRACTOR SHALL DETERMINE THE EXACT LOCATION OF ALL EXISTING UTILITIES BEFORE COMMENCING WORK, AND AGREES TO BE FULLY RESPONSIBLE FOR ANY AND ALL DAMAGES WHICH MIGHT BE OCCASIONED BY THE CONTRACTOR'S FAILURE TO EXACTLY LOCATE AND PRESERVE ANY AND ALL UNDERGROUND UTILITIES.

NORTH

Horizontal Scale
0 40' 80'
(Feet)
1 inch = 40 ft.

Date:	Revision Description:	By:
4/25/18	PRELIMINARY AND FINAL LAND DEVELOPMENT SUBMISSION TO SEVEN FIELDS BOROUGH	GLF
6/25/18	REVISED PER BOROUGH ENGINEER COMMENTS	MWS
6/27/18	REVISED PER BOROUGH ENGINEER COMMENTS	MWS

Professional Seal
COMMONWEALTH OF PENNSYLVANIA
REGISTERED PROFESSIONAL
DAVID W. LAPEARLE
LAND SURVEYOR 34201-E

Prepared By:
Sheffler & Company, Inc.
ENGINEERING • SURVEYING
1712 Mt. Nebo Road
Sewickley, PA 15143
Office Phone: 412-219-4509
Email: Info@ShefflerCo.com

Proposed Mixed-Use Residential & Retail Development
Enclave at Highpointe

Prepared For:
Kaclik Builders

Situate In:
Borough of Seven Fields, Butler County, Pennsylvania

SUBDIVISION PLAN

DRAWING SCALE:	1" = 40'	DRAWN BY:	MWS
DATE ISSUED:	04/25/2018	REVIEWED BY:	DWL
PROJECT JOB#:	3681	FIELD BOOK #:	
CADD#:	3681 Sub_Plan.dwg		

Kaclik Builders
Attn: Chris Kaclik
1272 Mars-Evans City Road #101
Evans City, PA 16033
Email: cjk1@zoominternet.net

Sheet No.

REC-2

Paul R. Smith Lisa Smith

COMMONWEALTH OF PENNSYLVANIA : SS
COUNTY OF BUTLER :

Before me, the subscriber, a Notary Public in and for said Commonwealth and County, personally came Paul R. & Lisa Smith and acknowledged the hereon proposed garage site plan to be their act and deed and desired the same to be recorded as such.

WITNESS MY HAND AND NOTARIAL SEAL this 21 day of SEPT 2018.

Notary Public Seal & Stamp

COMMONWEALTH OF PENNSYLVANIA
Notarial Seal
Debra L Jeffcoat, Notary Public
Jefferson Township, Butler County
My Commission Expires February 17, 2019

I, Stanley D. Graff, a Registered Professional Surveyor of the Commonwealth of Pennsylvania, do hereby certify, to the best of my knowledge, that this plan as shown hereon is based upon actual field survey of the land described and that all angles, distances and courses are correctly shown, that the monuments and markers have been set as shown on the plan, and that this plan correctly represents the lots, lands, streets and highways as surveyed and plotted by me for the owners or agents.

17 Aug '18 Date Seal P. L. S. # 30161-E

COMMONWEALTH OF PENNSYLVANIA REGISTERED PROFESSIONAL STANLEY D. GRAFF LAND SURVEYOR NO. 30161-E

The Board of Supervisors of the Township of Jefferson, hereby gives public notice that in approving this plan for recording purposes only, the Township of Jefferson assumes no obligations, legal or otherwise, expressed or implied either to accept said streets as Township streets or roads or grade, pave and curb the streets in said plan, or to construct sewers therein or to install any other such service ordinarily installed in Township streets or roads.

Approved by the Supervisors of the Township of Jefferson this 10th day of Sept. 2018.

Secretary Seal Chairman

Approved by the Jefferson Township Planning Commission this 20th day of AUGUST 2018.

Secretary Chairman

Reviewed by the Butler County Planning Commission this 20th day of July 2018.

Secretary Seal Chairman

BUTLER COUNTY PLANNING COMMISSION

COMMONWEALTH OF PENNSYLVANIA : SS
COUNTY OF BUTLER :

Recorded in the Recorder's Office for the recording of deeds, plans, etc., in said County in Plan Book Volume 373 Page 39.

Given under my hand and seal this 26th day of Sept 2018.

Recorder

MICHELE M. MUSTELLO
RECORDER OF DEEDS
My Commission Expires First Monday in January 2020

RECORDER OF DEEDS BUTLER COUNTY, PA

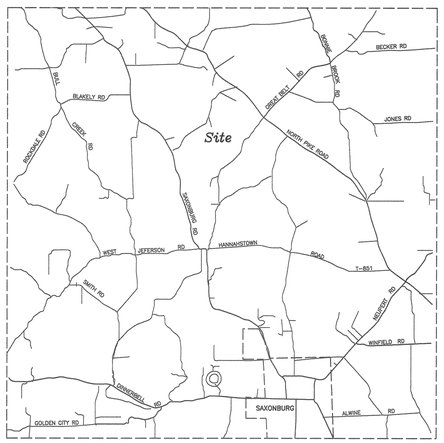

Vicinity Map

Instr:201809260019707 09/26/2018
Pages:1 F:$45.00 2:08PM
Michele Mustello T20180014192
Butler County Recorder FL



NOTE: Subject to and together with any and all existing rights-of-way, easements and conditional clauses of record or established by due process.

P.R.Smith Site Plan

Reference:
Wetzel/Smith Plan
Plan Book Volume 369/29

GRAFF SURVEYING LLC
P.O.Box 521 Saxonburg, PA 16056
330 Fisher Road, Cabot, PA 16023
info@graffsurveying.com
724.352.3811 fax 724.352.1059

SITE PLAN SURVEY for Paul R. & Lisa Smith
PROJECT No: 18122
SITUATE: JEFFERSON TOWNSHIP, BUTLER COUNTY, PA
DATE: 6/02/18 REV: 6/20/18 DWN.By: Sdg CHK.By: Co. TAX No: 190-1F155-18

Rev.8/16/18...revised bldg. size and location
Rev.6/20/18...added recording data

RECORDED	20
PLAN BOOK	PAGE
373	39
SHEET ___ of ___	

KNOW ALL MEN BY THESE PRESENTS; THAT ELIZABETH ALEXANDER, DOES HEREBY ADOPT THIS PLAN AS ITS PLAN OF LOTS OF ITS PROPERTY SITUATE IN BRADY TOWNSHIP, BUTLER COUNTY, PENNSYLVANIA, AND FOR DIVERS ADVANTAGES ACCRUING TO IT, DOES HEREBY DEDICATE FOREVER, FOR PUBLIC USE FOR HIGHWAY PURPOSES ALL SLOPE AREAS AND ALL DRIVES, ROADS, STREETS, LANES, WAYS AND OTHER PUBLIC HIGHWAYS SHOWN UPON THE PLAN, WITH THE SAME FORCE AND EFFECT AS IF THE SAME HAD BEEN THROUGH LEGAL PROCEEDINGS, AND IN CONSIDERATION OF THE APPROVAL OF SAID PLAN, AND ANY FUTURE ACCEPTANCE OF SAID PUBLIC HIGHWAYS BY THE COMMONWEALTH OF PENNSYLVANIA, COUNTY OF BUTLER, AND TOWNSHIP OF BRADY, ELIZABETH ALEXANDER, HEREBY COVENANTS AND AGREES TO AND BY THESE PRESENTS DOES RELEASE AND FOREVER DISCHARGE SAID COMMONWEALTH OF PENNSYLVANIA, COUNTY OF BUTLER, AND TOWNSHIP OF BRADY, THEIR SUCCESSORS OR ASSIGNS FROM ANY LIABILITY FOR DAMAGES ARISING AND TO ARISE FROM THE APPROPRIATION OF SAID GROUND FOR PUBLIC HIGHWAYS AND THE PHYSICAL GRADING THEREOF TO ANY GRADES THAT MAY BE ESTABLISHED. THIS DEDICATION AND RELEASE SHALL BE BINDING UPON ELIZABETH ALEXANDER, MY SUCCESSORS AND ASSIGNS AND PURCHASERS OF LOTS IN THIS PLAN.

IN WITNESS WHEREOF, WE, HEREUNTO SET OUR HAND AND SEAL THIS 3 DAY OF July 20 18.

ATTEST:

OWNER — Elizabeth J. Alexander OWNER

COMMONWEALTH OF PENNSYLVANIA) SS:
COUNTY OF BUTLER)

BEFORE ME, THE SUBSCRIBER, A NOTARY PUBLIC IN AND FOR SAID COMMONWEALTH AND COUNTY, PERSONALLY APPEARED ABOVED NAMED ELIZABETH ALEXANDER AND ACKNOWLEDGED THE FOREGOING RELEASE AND DEDICATION AND PLAN TO BE OUR ACT AND DEED AND DESIRE THE SAME TO BE RECORDED AS SUCH.

SWORN AND SUBSCRIBED BEFORE ME THIS DAY.

WITNESS MY HAND AND SEAL THIS 3 DAY OF July 20 18.
MY COMMISSION EXPIRES THE 11 DAY OF Nov. 2018.

NOTARY PUBLIC

COMMONWEALTH OF PENNSYLVANIA
NOTARIAL SEAL
Thomas Coyer, Notary Public
Slippery Rock Boro, Butler County
My Commission Expires Nov. 13, 2018
MEMBER, PENNSYLVANIA ASSOCIATION OF NOTARIES

APPROVED BY THE BRADY TOWNSHIP PLANNING COMMISSION THIS 1ST DAY OF August 2018.

SECRETARY — CHAIRMAN

THE BOARD OF SUPERVISORS OF THE TOWNSHIP OF BRADY HEREBY GIVES PUBLIC NOTICE THAT IN APPROVING THIS PLAN FOR RECORDING PURPOSES ONLY, THE TOWNSHIP OF BRADY ASSUMES NO OBLIGATIONS, LEGAL OR OTHERWISE, EXPRESSED OR IMPLIED, EITHER TO ACCEPT SAID STREETS AS TOWNSHIP STREETS, OR ROADS, OR GRADES, PAVE AND CURB THE STREETS IN SAID PLAN, OR TO CONSTRUCT SEWERS THEREIN OR TO INSTALL ANY OTHER SUCH SERVICE ORDINARILY INSTALLED IN TOWNSHIP STREETS OR ROADS.

APPROVED BY THE BOARD OF SUPERVISORS OF THE TOWNSHIP OF BRADY, THIS 6th DAY OF August, 2018.

SECRETARY — CHAIRMAN, BOARD OF SUPERVISORS

SUPERVISOR

I, JEFFREY A. SHUTY, A PROFESSIONAL LAND SURVEYOR OF THE COMMONWEALTH OF PENNSYLVANIA, DO HEREBY CERTIFY, TO THE BEST OF MY KNOWLEDGE, INFORMATION AND BELIEF, THAT THIS PLAN CORRECTLY REPRESENTS THE LOTS, LANDS, STREETS, AND HIGHWAYS AS SURVEYED AND PLOTTED BY ME FOR THE OWNERS AND OR AGENTS.

6/22/18 — DATE

REG. NO. SU078509

REVIEWED BY THE BUTLER COUNTY PLANNING COMMISSION THIS 22ND DAY OF JUNE 20 18.

SECRETARY — CHAIRMAN

BUTLER COUNTY PLANNING COMMISSION

COMMONWEALTH OF PENNSYLVANIA) SS:
COUNTY OF BUTLER)

RECORDED IN THE RECORDERS OFFICE FOR THE RECORDING OF DEEDS, PLANS, ETC. IN SAID COUNTY IN PLAN BOOK VOLUME 373 PAGE 40.

GIVEN UNDER MY HAND AND SEAL THIS 26 DAY OF September 2018.

RECORDER

MICHELE M. MUSTELLO
RECORDER OF DEEDS
My Commission Expires First Monday in January 2020

RECORDER OF DEEDS BUTLER COUNTY, PA.

PLAN BOOK	PAGE
373	40

KNOW ALL MEN BY THESE PRESENTS; THAT DAVID R. & THELMA M. SNYDER, DO HEREBY ADOPT THIS PLAN AS ITS PLAN OF LOTS OF ITS PROPERTY SITUATE IN BRADY TOWNSHIP, BUTLER COUNTY, PENNSYLVANIA, AND FOR DIVERS ADVANTAGES ACCRUING TO IT, DOES HEREBY DEDICATE FOREVER, FOR PUBLIC USE FOR HIGHWAY PURPOSES ALL SLOPE AREAS AND ALL DRIVES, ROADS, STREETS, LANES, WAYS AND OTHER PUBLIC HIGHWAYS SHOWN UPON THE PLAN, WITH THE SAME FORCE AND EFFECT AS IF THE SAME HAD BEEN THROUGH LEGAL PROCEEDINGS, AND IN CONSIDERATION OF THE APPROVAL OF SAID PLAN, AND ANY FUTURE ACCEPTANCE OF SAID PUBLIC HIGHWAYS BY THE COMMONWEALTH OF PENNSYLVANIA, COUNTY OF BUTLER, AND TOWNSHIP OF BRADY, DAVID R. & THELMA M. SNYDER, HEREBY COVENANTS AND AGREES TO AND BY THESE PRESENTS DOES RELEASE AND FOREVER DISCHARGE SAID COMMONWEALTH OF PENNSYLVANIA, COUNTY OF BUTLER, AND TOWNSHIP OF BRADY, THEIR SUCCESSORS OR ASSIGNS FROM ANY LIABILITY FOR DAMAGES ARISING AND TO ARISE FROM THE APPROPRIATION OF SAID GROUND FOR PUBLIC HIGHWAYS AND THE PHYSICAL GRADING THEREOF TO ANY GRADES THAT MAY BE ESTABLISHED. THIS DEDICATION AND RELEASE SHALL BE BINDING UPON DAVID R. & THELMA M. SNYDER, OUR SUCCESSORS AND ASSIGNS AND PURCHASERS OF LOTS IN THIS PLAN.

IN WITNESS WHEREOF, WE, HEREUNTO SET OUR HAND AND SEAL THIS 29th DAY OF June 20 18.

ATTEST:

OWNER — David R. Snyder — Thelma M. Snyder — OWNER

COMMONWEALTH OF PENNSYLVANIA) SS:
COUNTY OF BUTLER) OHIO TRUMBULL

BEFORE ME, THE SUBSCRIBER, A NOTARY PUBLIC IN AND FOR SAID COMMONWEALTH AND COUNTY, PERSONALLY APPEARED ABOVED NAMED DAVID R. & THELMA M. SNYDER AND ACKNOWLEDGED THE FOREGOING RELEASE AND DEDICATION AND PLAN TO BE OUR ACT AND DEED AND DESIRE THE SAME TO BE RECORDED AS SUCH.

SWORN AND SUBSCRIBED BEFORE ME THIS DAY.

WITNESS MY HAND AND SEAL THIS 29TH DAY OF JUNE 2018
MY COMMISSION EXPIRES THE 15TH DAY OF July 2018

Cynthia D. Klein
Notary Public, State of Ohio
My commission expires
July 15, 2018

NOTARY PUBLIC

Instr: 201809250019717 09/26/2018
Pages: 1 F: $45.00 3:01PM
Michele Mustello T20180014200
Butler County Recorder FL

NON-BUILDING WAIVER

"As of the date of this deed/plot plan recording, the property/subdivision described herein is and shall be dedicated for the express purpose of AGRICULTURE use. No portion(or lot number(s) 2, of this property/subdivision has been approved by BRADY TOWNSHIP (Municipality) or the Department of Environmental Protection (DEP) for the installation of sewage disposal facilities. No sewage permit will be issued for the installation, construction, connection to or use of any sewage collection, conveyance, treatment or disposal system (except for repairs to existing systems) unless the municipality and DEP have both approved sewage facilities planning for the property/subdivision described herein in accordance with the Pennsylvania Sewage Facilities Act (35 P.S. Sections 750.1 et seq.) and regulations promulgated thereunder. Prior to signing, executing, implementing or recording any sales contract or subdivision plan, any purchaser or subdivider of any portion of this property should contact appropriate officials of BRADY TOWNSHIP (municipality), which is charged with administering the Sewage Facilities Act to determine what sewage facilities planning is required and the procedure and requirements for obtaining appropriate permits or approvals."

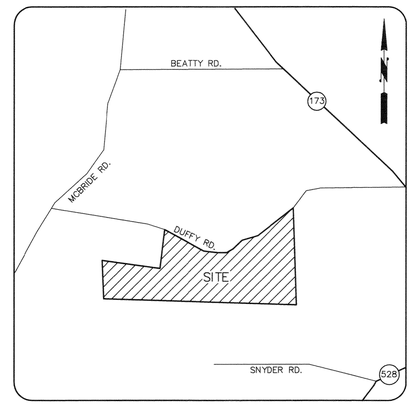

LOCATION MAP
N.T.S.

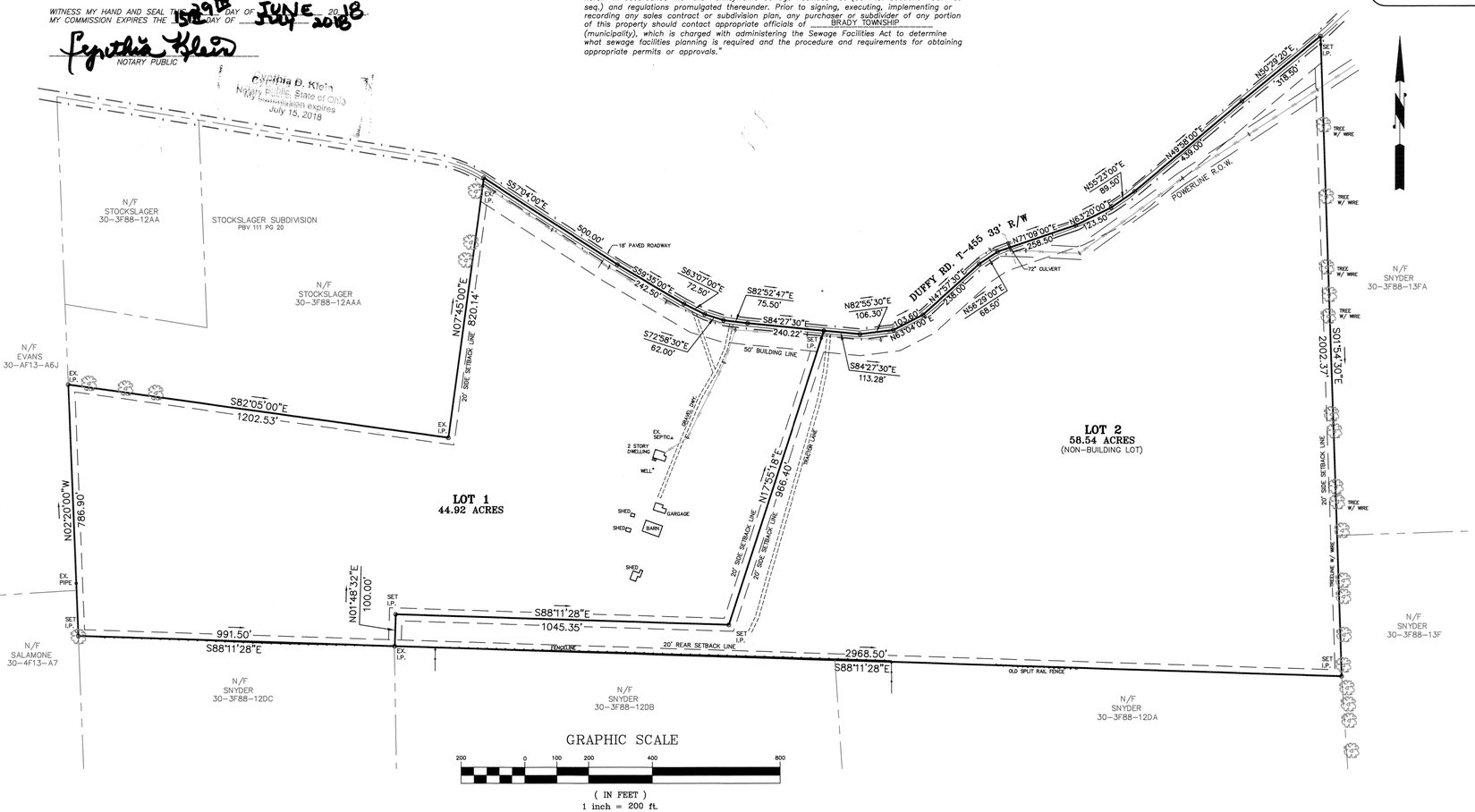

GRAPHIC SCALE

200 0 100 200 400 800

(IN FEET)
1 inch = 200 ft.

ZONING: AR-AGRICULTURAL-RESIDENTIAL
MIN. LOT AREA 2 ACRES
MIN. LOT WIDTH 160'
BLDG. SETBACKS
FRONT 50'
SIDE 20'
REAR 20'
ASSESORY BLDG. 10'
MAX BLDG. HT. 35'
MAX. LOT COVERAGE 20%

TOTAL PLAN AREA 103.46 ACRES
LOT 1 44.92 ACRES
LOT 2 58.54 ACRES

TAX PARCEL: 30-3F88-12A
DEED REF: DBV 2484 PG. 430

OWNER:
ELIZABETH ALEXANDER
DAVID R. & THELMA M. SNYDER
316 DUFFY ROAD
SLIPPERY ROCK, PA 16057
724-794-3829

COMMONWEALTH OF PENNSYLVANIA REGISTERED PROFESSIONAL JEFFREY A. SHUTY LAND SURVEYOR No. SU078509

NORTHERN
SURVEYORS AND ASSOCIATES
137 LINK LANE
SLIPPERY ROCK, PA 16057
(724)530-6889

Scale 1" = 200'
Date APRIL 12, 2018
Job No. 2202

Alexander Subdivision
Situate in Brady Township
Butler County, Pa.
Prepared For Elizabeth Alexander

Sheet No. 1 of 1

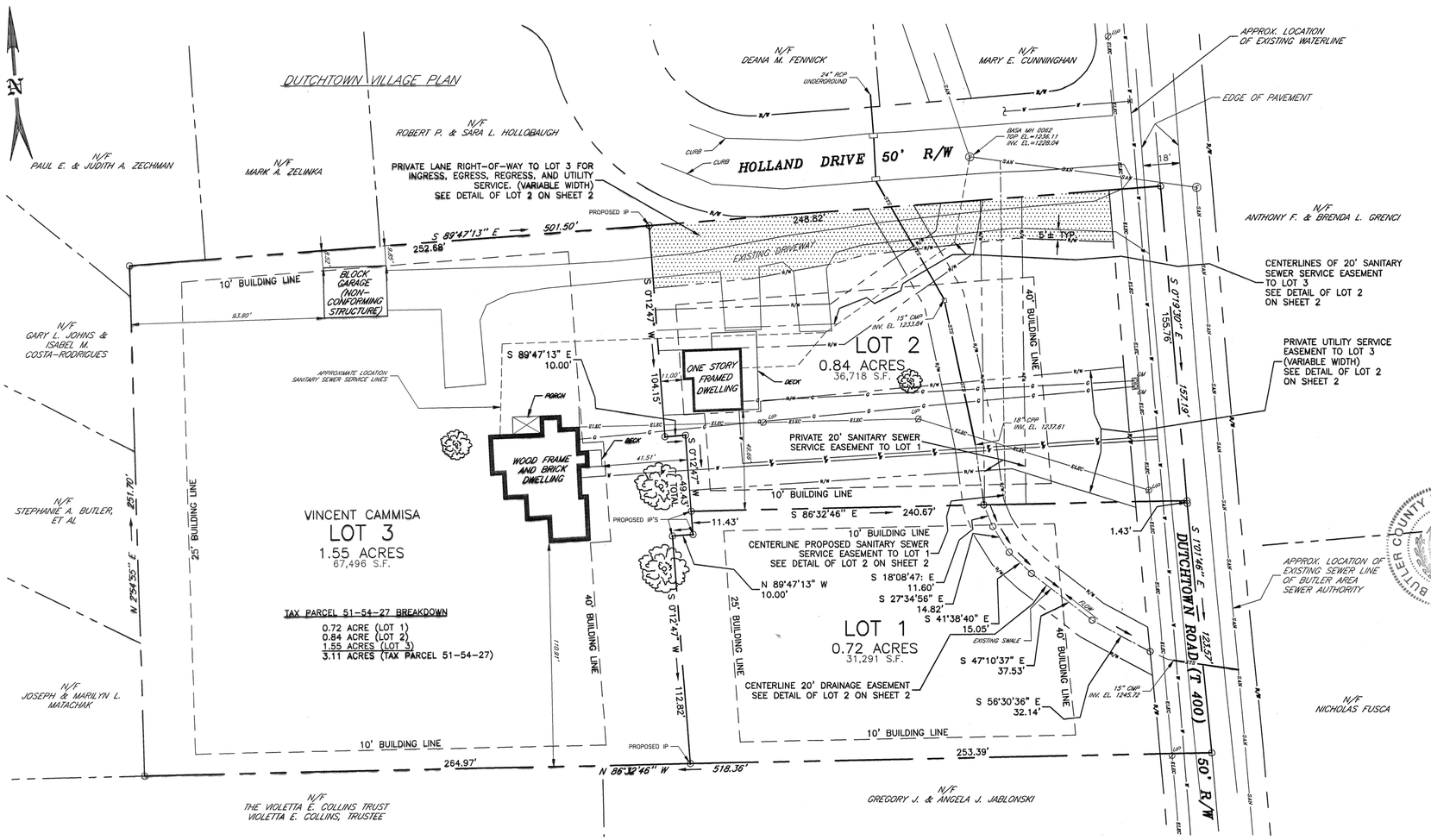

OVERALL PLAN

INDIVIDUAL ADOPTION

KNOW ALL MEN BY THESE PRESENTS, THAT I, **VINCENT R. CAMMISA**, OF THE TOWNSHIP OF BUTLER, COUNTY OF BUTLER, AND COMMONWEALTH OF PENNSYLVANIA, FOR MYSELF, MY HEIRS, EXECUTORS, ADMINISTRATORS AND ASSIGNS, DO HEREBY ADOPT THIS PLAN AS MY PLAN OF MY PROPERTY SITUATED IN BUTLER TOWNSHIP AND DO HEREBY DEDICATE FOREVER FOR PUBLIC USE FOR HIGHWAY AND UTILITY PURPOSES, ALL DRIVES, ROADS, LANES, WAYS, RIGHTS-OF-WAY, AND OTHER PUBLIC HIGHWAYS SHOWN UPON THE PLAN, AND I RELEASE, REMISE AND DISCHARGE THE TOWNSHIP OF BUTLER, ITS SUCCESSORS OR ASSIGNS, OF AND FROM ALL LIABILITY, COURSES OF ACTION, CLAIMS OR DAMAGES ARISING FROM OR PERTAINING TO IN ANY MANNER SAID ROADS, AND RIGHTS-OF-WAY.

I FURTHER AGREE THAT SAID PLAN IS APPROVED BY THE TOWNSHIP OF BUTLER FOR "PLANNING PURPOSES ONLY" AND THAT SAID TOWNSHIP SHALL NOT ISSUE ANY "BUILDING PERMITS" FOR LOTS CONTAINED HEREIN, NOR SHALL ANY LOTS BE DEEDED UNTIL EITHER ALL OF SAID ROADS AND IMPROVEMENTS IN ACCORDANCE WITH BUTLER TOWNSHIP ORDINANCE _____ AND ALL OTHER APPLICABLE ORDINANCES HAVE BEEN COMPLETED AND ACCEPTED BY SAID TOWNSHIP OR UNTIL THE TOWNSHIP HAS APPROVED A BOND WITH SUFFICIENT SURETY TO GUARANTEE CONSTRUCTION OF THE SAME. IN WITNESS WHEREOF,
I HEREUNTO SET MY HAND AND SEAL THIS 21 DAY OF Aug, 2018.

NOTARY PUBLIC — VINCENT R. CAMMISA

COMMONWEALTH OF PENNSYLVANIA - NOTARIAL SEAL - ROBERT JOHN WHITE - Notary Public - BUTLER TWP, BUTLER COUNTY - My Commission Expires Sep 12, 2018

INDIVIDUAL ACKNOWLEDGEMENT

COMMONWEALTH OF PENNSYLVANIA)SS:
COUNTY OF BUTLER

BEFORE ME, THE SUBSCRIBER, A NOTARY PUBLIC IN AND FOR SAID COMMONWEALTH AND COUNTY PERSONALLY APPEARED THE ABOVE NAMED **VINCENT R. CAMMISA**, AND ACKNOWLEDGED THE FOREGOING RELEASE AND DEDICATION AND PLAN TO BE HIS ACT AND DEED AND DESIRED THE SAME TO BE RECORDED AS SUCH.

SWORN AND SUBSCRIBED BEFORE ME THIS DAY.
WITNESS MY HAND AND NOTARIAL SEAL THIS 21 DAY OF Aug, 2018.
MY COMMISSION EXPIRES THE 12 DAY OF Sept, 2018.

NOTARY PUBLIC

COMMONWEALTH OF PENNSYLVANIA - NOTARIAL SEAL - ROBERT JOHN WHITE - Notary Public - BUTLER TWP, BUTLER COUNTY - My Commission Expires Sep 12, 2018

TITLE CLAUSE (NO MORTGAGE)

I, **VINCENT R. CAMMISA**, OWNER OF **TAX PARCEL 51-54-27**, DO HEREBY CERTIFY THAT THE TITLE OF THIS PROPERTY IS IN THE NAME OF **VINCENT R. CAMMISA** AS RECORDED IN **INSTRUMENT NUMBER 201304150010644**, IN THE RECORDER OF DEEDS OFFICE. WE FURTHER CERTIFY THAT THERE IS NO MORTGAGE, LIEN OR ENCUMBRANCE AGAINST THIS PROPERTY.

WITNESS — VINCENT R. CAMMISA

BUTLER COUNTY PLANNING COMMISSION

REVIEWED BY THE BUTLER COUNTY PLANNING COMMISSION THIS 10TH DAY OF July, 2018.

SECRETARY — CHAIRMAN

TOWNSHIP PLANNING COMMISSION

APPROVED BY THE BUTLER TOWNSHIP PLANNING COMMISSION THIS 7th DAY OF August, 2018.

SECRETARY — CHAIRMAN

BOARD OF COMMISSIONERS

THE BOARD OF COMMISSIONERS OF THE TOWNSHIP OF BUTLER HEREBY GIVES PUBLIC NOTICE THAT IN APPROVING THIS PLAN FOR RECORDING PURPOSES ONLY, THE TOWNSHIP ASSUMES NO OBLIGATIONS, LEGAL OR OTHERWISE, EXPRESSED OR IMPLIED, EITHER TO ACCEPT SAID STREETS AS TOWNSHIP STREETS OR ROADS, OR GRADE, PAVE AND CURB THE STREETS IN SAID PLAN, OR TO CONSTRUCT SEWERS THEREIN OR TO INSTALL ANY OTHER SUCH SERVICE ORDINARILY INSTALLED IN TOWNSHIP STREETS OR ROADS.

SECRETARY — PRESIDENT

APPROVED BY THE BOARD OF COMMISSIONERS OF THE TOWNSHIP OF BUTLER
THIS 19th DAY OF September, 2018.

SECRETARY — PRESIDENT

PROOF OF RECORDING

COMMONWEALTH OF PENNSYLVANIA)SS
COUNTY OF BUTLER

RECORDED IN THE OFFICE FOR THE RECORDING OF DEEDS, PLATS, ETC.,
IN SAID COUNTY IN PLAN BOOK 373, PAGE 41-42.
GIVEN UNDER MY HAND AND SEAL THIS 27th DAY OF September, 2018.

RECORDER — SEAL

MICHELE M. MUSTELLO
RECORDER OF DEEDS
My Commission Expires First Monday in January 2020

RECORDER OF DEEDS - BUTLER COUNTY, PA

SURVEYOR CERTICATION

I, RONALD OLSEN, A REGISTERED PROFESSIONAL SURVEYOR OF THE COMMONWEALTH OF PENNSYLVANIA, DO HEREBY CERTIFY, TO THE BEST OF MY KNOWLEDGE, THAT THE PLAN AS SHOWN HEREON IS BASED UPON ACTUAL FIELD SURVEY OF THE LAND DESCRIBED AND THAT ALL ANGLES, DISTANCES, AND COURSES ARE CORRECTLY SHOWN, THAT THE MONUMENTS AND MARKERS HAVE BEEN SET AS SHOWN ON THE PLAN, AND THAT THIS PLAN CORRECTLY REPRESENTS THE LOTS, LANDS, STREETS AND HIGHWAYS AS SURVEYED AND PLOTTED BY ME FOR THE OWNERS OR AGENTS.

RONALD OLSEN PLS # SU-963-A

COMMONWEALTH OF PENNSYLVANIA - REGISTERED PROFESSIONAL - RONALD OLSEN - SURVEYOR No. SU-963-A

RONALD OLSEN, P.L.S.
SU-963-A
8/20/18
DATE

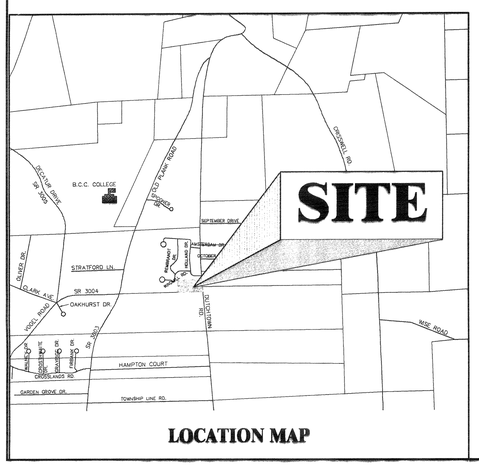

LOCATION MAP

NOTES:

1. ELEVATIONS SHOWN ON EXISTING SANITARY SEWER MANHOLE AND STORMWATER CULVERTS ARE ON VERTICAL DATUM NAV 83.

2. THE COST OF MAINTENANCE OF THE EXISTING PRIVATE SANITARY SEWER SERVICE LINE SERVING LOT 2 AND LOT 3 SHALL BE SHARED EQUALLY BETWEEN THE OWNERS OF THESE LOTS FOR ANY NEEDED REPAIRS FROM THE JUNCTION OF THE TWO SERVICE LINES TO THE SANITARY SEWER MANHOLE. REPAIRS SHALL INCLUDE RESTORATION OF DISTURBED AREAS TO A CONDITION EQUAL OR BETTER THAN THAT EXISTING AT THE TIME OF MAINTENANCE,

3. THE COST OF MAINTENANCE FOR THE EXISTING DRIVEWAY LOCATED ON THE PRIVATE LANE RIGHT-OF-WAY WILL BE SHARED EQUALLY BETWEEN THE OWNERS OF LOT 2 AND LOT 3 FOR ANY NEEDED REPAIRS EAST OF THE PROPERTY LINE COMMON TO BOTH LOTS.

4. THE LOCATION OF THE PROPOSED PRIVATE SANITARY SEWER SERVICE EASEMENT THROUGH LOT 2 TO SERVE LOT 3 IS BASED IN PART UPON THE LOCATION OF THE EXISTING SANITARY SEWER SERVICE LINES. THE LOCATION OF THESE LINES ARE BASED UPON SKETCHES OF THE EXISTING UNDERGROUND SANITARY SEWER SERVICE LOCATIONS PROVIDED BY THE BUTLER AREA SEWER AUTHORITY AS PART OF THE SEWER SERVICE PERMIT FOR 160 1/2 DUTCHTOWN ROAD DATED 1976.

5. THE CONSTRUCTION OF A RESIDENTIAL DWELLING ON LOT 1 MUST COMPLY WITH THE REQUIREMENTS OF BUTLER TOWNSHIP ORDINANCE NO. 855, STORMWATER MANAGEMENT.

OWNER/APPLICANT

VINCENT R. CAMMISA
160 DUTCHTOWN ROAD
BUTLER, PA. 16001
PARENT PARCEL: TAX PARCEL 51-54-27

ZONING INFORMATION

ZONING DISTRICT: R-1
MINIMUM LOT AREA: 25,000 S.F.
FRONT SETBACK: 40'
SIDE SETBACK: 10'
REAR SETBACK: 25'

Instr:201809270019782 09/27/2018 12:04PM
Pages:2 F:$65.00
Michele Mustello T20180014262
Butler County Recorder FL

SHEET 1 OF 2

PLAN BOOK	PAGE
373	41

Pennsylvania One Call System, Inc.
PENNSYLVANIA ONE CALL SYSTEM, INC. 1-800-242-1776 STOP-CALL BEFORE YOU DIG!
BEFORE YOU DIG ANYWHERE IN PENNSYLVANIA! CALL 1-800-242-1776
SERIAL # 20181590822

The information contained in this set of documents is proprietary for the use by Olsen Craft Associates, LLC and its project client. Reuse for other projects or reuse by others is strictly prohibited without written authorization from Olsen Craft Associates, LLC. Those with authorization are cautioned that no guaranty is made by Olsen Craft Associates, LLC regarding accuracy, precision, or completeness of these documents. Olsen Craft Associates, LLC assumes no liability for authorized or unauthorized reuse of these documents.

REV.	REVISION DESCRIPTION	REV BY	CHK BY	DATE
C	REVISION TO SANITARY SEWER ROW	PDP	RO	8/20/2018
B	REVISIONS-MISC & TWP REVIEW COMMENTS	CLH	RO	8/02/2018
A	SUBMISSION TO BUTLER TOWNSHIP	PDP	RWC	7/10/2018

OLSEN CRAFT ASSOCIATES, LLC
ENGINEERS • COMMUNITY PLANNERS • SURVEYORS • GRANTS WRITERS • PROJECT AND PERMIT ADMINISTRATORS
126 S. MAIN STREET BUTLER PENNSYLVANIA 16001 (724) 282-4788 FAX (724) 282-7619 www.OlsenAndAssociates.us

VINCENT CAMMISA
DUTCHTOWN ROAD SUBDIVISION
SUBDIVISION PLAN
BUTLER TOWNSHIP, BUTLER COUNTY, PENNSYLVANIA

DATE: 7/09/2018
SHEET NO. C050 REV. C
SCALE 0 30' 60'
CHKD. BY: RWC DRAWN BY: PDP PROJECT NO. 201827A

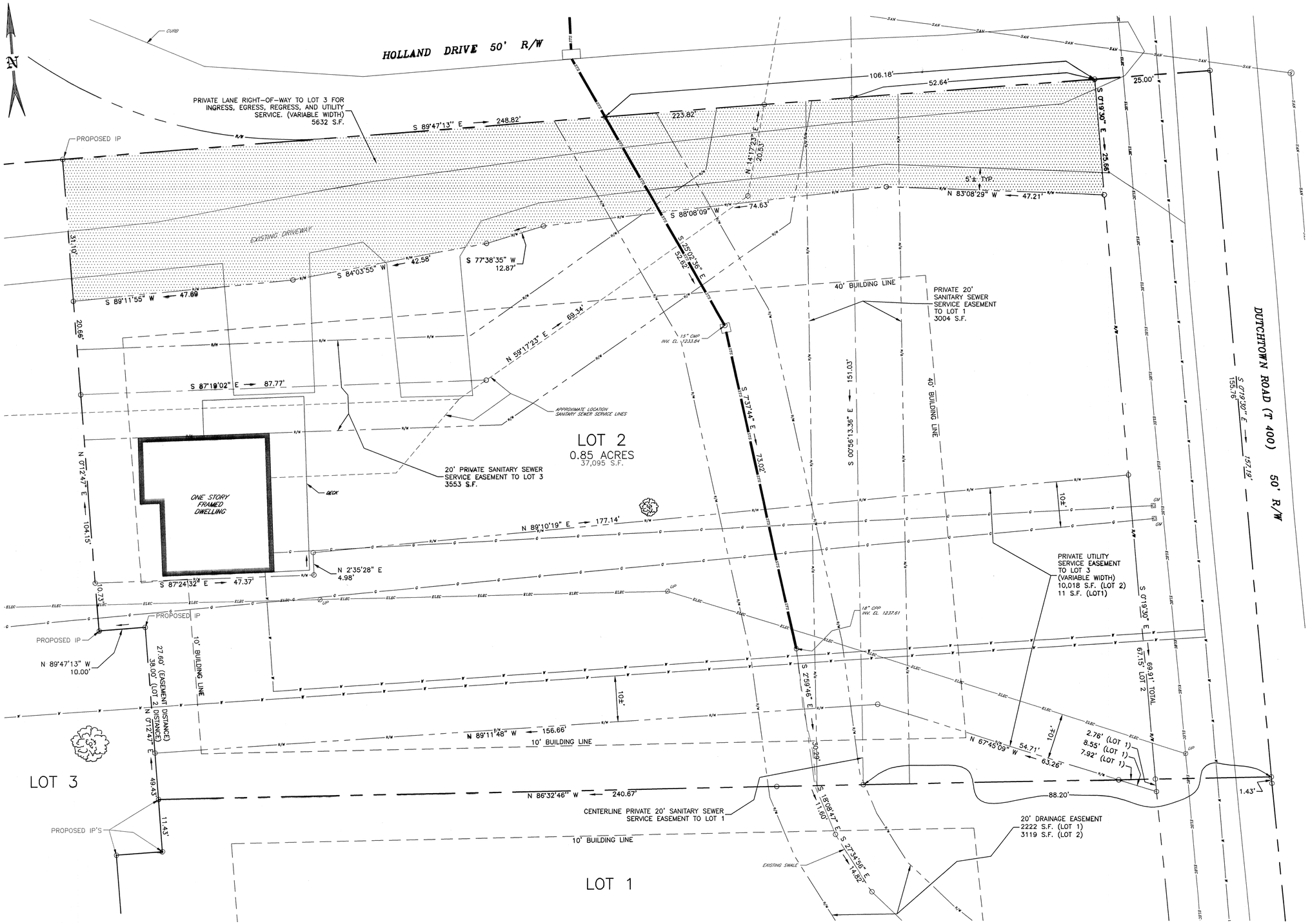

DETAIL OF LOT 2

SHEET 2 OF 2

COMMONWEALTH OF PENNSYLVANIA REGISTERED PROFESSIONAL RONALD OLSEN LAND SURVEYOR No. SU-963-A

RONALD OLSEN, P.L.S.
SU-963-A
8-20-18
DATE

PLAN BOOK	PAGE
373	42

Pennsylvania One Call System, Inc.
PENNSYLVANIA ONE CALL SYSTEM, INC. 1-800-242-1776 STOP-CALL BEFORE YOU DIG!
BEFORE YOU DIG ANYWHERE IN PENNSYLVANIA! CALL 1-800-242-1776
SERIAL # 20181590822

The information contained in this set of documents is proprietary for the use by Olsen Craft Associates, LLC and its project client. Reuse for other projects or reuse by others is strictly prohibited without written authorization from Olsen Craft Associates, LLC. Those with authorization are cautioned that no guaranty is made by Olsen Craft Associates, LLC regarding accuracy, precision, or completeness of these documents. Olsen Craft Associates, LLC assumes no liability for authorized or unauthorized reuse of these documents.

REV.	REVISION DESCRIPTION	REV BY	CHK BY	DATE
C	REVISION TO SANITARY SEWER ROW	PDP	RO	8/20/2018
B	REVISIONS-MISC & TWP REVIEW COMMENTS	CLH	RO	8/02/2018
A	SUBMISSION TO BUTLER TOWNSHIP	PDP	RWC	7/10/2018

OLSEN CRAFT ASSOCIATES, LLC
ENGINEERS • COMMUNITY PLANNERS • SURVEYORS • GRANTS WRITERS • PROJECT AND PERMIT ADMINISTRATORS
126 S. MAIN STREET BUTLER PENNSYLVANIA 16001 (724) 282-4786 FAX (724) 282-7619 www.OlsenAndAssociates.us

VINCENT CAMMISA
DUTCHTOWN ROAD SUBDIVISION
SUBDIVISION PLAN
BUTLER TOWNSHIP, BUTLER COUNTY, PENNSYLVANIA

DATE: 7/25/2018
SHEET NO. C051
REV. C

SCALE 0 10' 20' | CHKD. BY: RO | DRAWN BY: CLH | PROJECT NO. 201827A

KNOW ALL MEN BY THESE PRESENTS; THAT DONALD R. & SARAH L. HUFFMAN REVOCABLE TRUST DOES HEREBY ADOPT THIS PLAN AS ITS PLAN OF LOTS OF ITS PROPERTY SITUATE IN SLIPPERY ROCK TOWNSHIP, BUTLER COUNTY, PENNSYLVANIA, AND FOR DIVERS ADVANTAGES ACCRUING TO IT, DO HEREBY DEDICATE FOREVER, FOR PUBLIC USE FOR HIGHWAY PURPOSES ALL SLOPE AREAS AND ALL DRIVES, ROADS, STREETS, LANES, WAYS AND OTHER PUBLIC HIGHWAYS SHOWN UPON THE PLAN, WITH THE SAME FORCE AND EFFECT AS IF THE SAME HAD BEEN THROUGH LEGAL PROCEEDINGS, AND IN CONSIDERATION OF THE APPROVAL OF SAID PLAN, AND ANY FUTURE ACCEPTANCE OF SAID PUBLIC HIGHWAYS BY THE COMMONWEALTH OF PENNSYLVANIA, COUNTY OF BUTLER, AND TOWNSHIP OF SLIPPERY ROCK, DONALD R. & SARAH L. HUFFMAN REVOCABLE TRUST HEREBY COVENANTS AND AGREES TO AND BY THESE PRESENTS DOES RELEASE AND FOREVER DISCHARGE SAID COMMONWEALTH OF PENNSYLVANIA, COUNTY OF BUTLER, AND TOWNSHIP OF SLIPPERY ROCK, THEIR SUCCESSORS OR ASSIGNS FROM ANY LIABILITY FOR DAMAGES ARISING AND TO ARISE FROM THE APPROPRIATION OF SAID GROUND FOR PUBLIC HIGHWAYS AND THE PHYSICAL GRADING THEREOF TO ANY GRADES THAT MAY BE ESTABLISHED. THIS DEDICATION AND RELEASE SHALL BE BINDING UPON DONALD R. & SARAH L. HUFFMAN REVOCABLE TRUST MY SUCCESSORS AND ASSIGNS AND PURCHASERS OF LOTS IN THIS PLAN.

IN WITNESS WHEREOF, WE, HEREUNTO SET OUR HAND AND SEAL THIS 19 DAY OF MARCH 2018.

ATTEST:

Donald R. Huffman Trustee — OWNER/TRUSTEE

Sarah L. Huffman Trustee — OWNER/TRUSTEE

STATE OF CALIFORNIA)SS:
COUNTY OF San Diego)

BEFORE ME, THE SUBSCRIBER, A NOTARY PUBLIC IN AND FOR SAID COMMONWEALTH AND COUNTY, PERSONALLY APPEARED ABOVED NAMED DONALD R. & SARAH L. HUFFMAN A TRUSTEES OF DONALD R. & SARAH L. HUFFMAN REVOCABLE TRUST AND ACKNOWLEDGED THE FOREGOING RELEASE AND DEDICATION AND PLAN TO BE OUR ACT AND DEED AND DESIRE THE SAME TO BE RECORDED AS SUCH.

SWORN AND SUBSCRIBED BEFORE ME THIS DAY.

WITNESS MY HAND AND SEAL THIS 19 DAY OF March 2018.
MY COMMISSION EXPIRES THE 1 DAY OF DEC. 2019.

NOTARY PUBLIC

KI HOON CHOI
COMMISSION NO. 2132520
NOTARY PUBLIC-CALIFORNIA
SAN DIEGO COUNTY
COMMISSION EXPIRES DEC 1, 2019

APPROVED BY THE SLIPPERY ROCK TOWNSHIP PLANNING COMMISSION THIS 14th DAY OF September, 2018.

Vonnie J. Hogg — SECRETARY

Greg C. Fuster — CHAIRMAN

THE BOARD OF SUPERVISORS OF THE TOWNSHIP OF SLIPPERY ROCK HEREBY GIVES PUBLIC NOTICE THAT IN APPROVING THIS PLAN FOR RECORDING PURPOSES ONLY, THE TOWNSHIP OF SLIPPERY ROCK ASSUMES NO OBLIGATIONS, LEGAL OR OTHERWISE, EXPRESSED OR IMPLIED, EITHER TO ACCEPT SAID STREETS AS TOWNSHIP STREETS, OR ROADS, OR GRADES, PAVE AND CURB THE STREETS IN SAID PLAN, OR TO CONSTRUCT SEWERS THEREIN OR TO INSTALL ANY OTHER SUCH SERVICE ORDINARILY INSTALLED IN TOWNSHIP STREETS OR ROADS.

APPROVED BY THE BOARD OF SUPERVISORS OF THE TOWNSHIP OF SLIPPERY ROCK, THIS 14th DAY OF September, 2018.

Karen Connell — SECRETARY

Paul A. Dick — CHAIRMAN, BOARD OF SUPERVISORS

SUPERVISOR

I, JEFFREY A. SHUTY, A PROFESSIONAL LAND SURVEYOR OF THE COMMONWEALTH OF PENNSYLVANIA, DO HEREBY CERTIFY, TO THE BEST OF MY KNOWLEDGE, INFORMATION AND BELIEF, THAT THIS PLAN CORRECTLY REPRESENTS THE LOTS, LANDS, STREETS, AND HIGHWAYS AS SURVEYED AND PLOTTED BY ME FOR THE OWNERS AND OR AGENTS.

3/13/18 — DATE

REG. NO. SU075509

REVIEWED BY THE BUTLER COUNTY PLANNING COMMISSION THIS 9TH DAY OF MARCH 2018.

SECRETARY — CHAIRMAN

BUTLER COUNTY PLANNING COMMISSION

COMMONWEALTH OF PENNSYLVANIA) SS:
COUNTY OF BUTLER)

RECORDED IN THE RECORDERS OFFICE FOR THE RECORDING OF DEEDS, PLANS, ETC. IN SAID COUNTY IN PLAN BOOK VOLUME 373 PAGE 43.

GIVEN UNDER MY HAND AND SEAL THIS 28 DAY OF September 2018.

RECORDER

RECORDER OF DEEDS — BUTLER COUNTY, PA.

MICHELE M. MUSTELLO
RECORDER OF DEEDS
My Commission Expires First Monday In January 2020

KNOW ALL MEN BY THESE PRESENTS; THAT ACC HOLDINGS LP, DOES HEREBY ADOPT THIS PLAN AS ITS PLAN OF LOTS OF ITS PROPERTY SITUATE IN SLIPPERY ROCK TOWNSHIP, BUTLER COUNTY, PENNSYLVANIA, AND FOR DIVERS ADVANTAGES ACCRUING TO IT, DO HEREBY DEDICATE FOREVER, FOR PUBLIC USE FOR HIGHWAY PURPOSES ALL SLOPE AREAS AND ALL DRIVES, ROADS, STREETS, LANES, WAYS AND OTHER PUBLIC HIGHWAYS SHOWN UPON THE PLAN, WITH THE SAME FORCE AND EFFECT AS IF THE SAME HAD BEEN THROUGH LEGAL PROCEEDINGS, AND IN CONSIDERATION OF THE APPROVAL OF SAID PLAN, AND ANY FUTURE ACCEPTANCE OF SAID PUBLIC HIGHWAYS BY THE COMMONWEALTH OF PENNSYLVANIA, COUNTY OF BUTLER, AND TOWNSHIP OF SLIPPERY ROCK, ACC HOLDINGS LP, HEREBY COVENANTS AND AGREES TO AND BY THESE PRESENTS DOES RELEASE AND FOREVER DISCHARGE SAID COMMONWEALTH OF PENNSYLVANIA, COUNTY OF BUTLER, AND TOWNSHIP OF SLIPPERY ROCK, THEIR SUCCESSORS OR ASSIGNS FROM ANY LIABILITY FOR DAMAGES ARISING AND TO ARISE FROM THE APPROPRIATION OF SAID GROUND FOR PUBLIC HIGHWAYS AND THE PHYSICAL GRADING THEREOF TO ANY GRADES THAT MAY BE ESTABLISHED. THIS DEDICATION AND RELEASE SHALL BE BINDING UPON ACC HOLDINGS LP, MY SUCCESSORS AND ASSIGNS AND PURCHASERS OF LOTS IN THIS PLAN.

IN WITNESS WHEREOF, WE, HEREUNTO SET OUR HAND AND SEAL THIS 11 DAY OF SEPTEMBER 2018.

ATTEST:

OWNER/PARTNER

OWNER/PARTNER

COMMONWEALTH OF PENNSYLVANIA) SS:
COUNTY OF BUTLER)

BEFORE ME, THE SUBSCRIBER, A NOTARY PUBLIC IN AND FOR SAID COMMONWEALTH AND COUNTY, PERSONALLY APPEARED ABOVED NAMED DARLIN THOMAS CULLSON A PARTNER OF ACC HOLDINGS LP AND ACKNOWLEDGED THE FOREGOING RELEASE AND DEDICATION AND PLAN TO BE OUR ACT AND DEED AND DESIRE THE SAME TO BE RECORDED AS SUCH.

SWORN AND SUBSCRIBED BEFORE ME THIS DAY.

WITNESS MY HAND AND SEAL THIS 11 DAY OF SEPT 2018.
MY COMMISSION EXPIRES THE 4 DAY OF MAY 2020.

NOTARY PUBLIC

COMMONWEALTH OF PENNSYLVANIA
NOTARIAL SEAL
William R. Chappell, Notary Public
Cranberry Twp., Butler County
My Commission Expires May 4, 2020

Instr:201809290019939 09/28/2018
Pages:1 F:$45.00 10:07AM
Michele Mustello T20180014302
Butler County Recorder FL

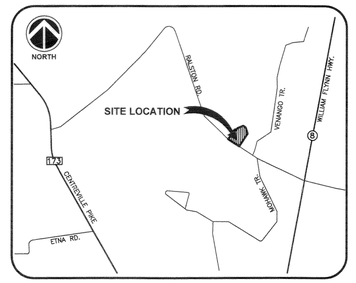

VICINITY MAP
NOT TO SCALE

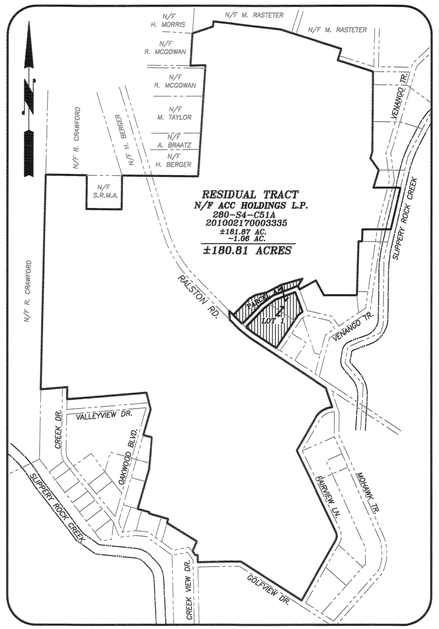

RESIDUAL MAP
1" = 600'

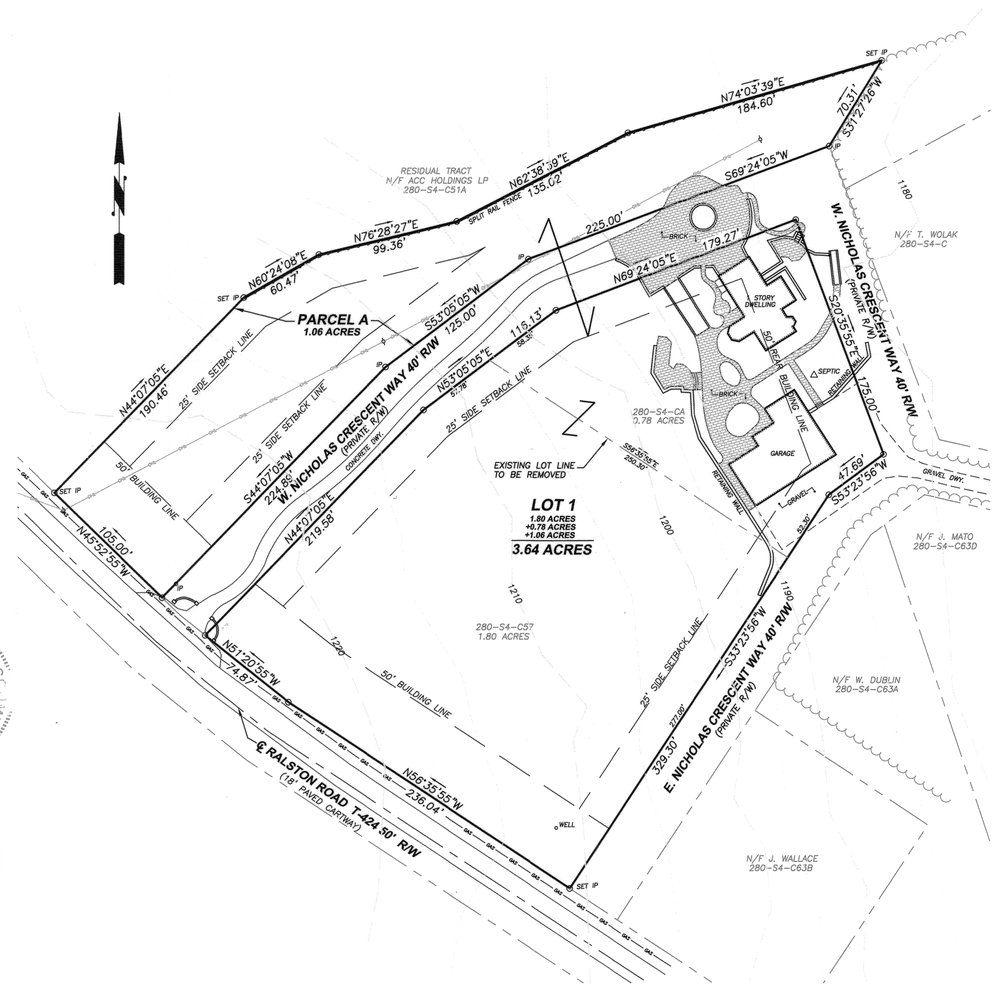

NOTES:
1. PARCELS "A" IS NOT SEPARATE BUILDING LOT AND IS TO BE CONVEYED FROM PARCEL 280-S4-C51A (ACC HOLDINGS LP) AND BECOME PART OF ADJOINING PARCEL 280-S4-C57 (LOT 1).
2. THIS PLAN IS A LOT CONSOLIDATION AND LOT LINE REVISION PLAN PARCEL 280-S4-CA TO BE CONSOLIDATED WITH PARCEL 280-S4-C57 AND PARCEL "A" TO BE CONVEYED AS SIDE LOT ADDITION TO CREATE LOT 1.

ZONING – R-1 LOW DENSITY RESIDENTIAL
MIN. LOT AREA 1.00 ACRE
MIN. LOT WIDTH 150'
SETBACKS:
FRONT YARD 50'
SIDE YARD 25'
REAR YARD 50'
MAX. BLDG. HT. 35'
MAX. COVERAGE 15%

TOTAL PLAN AREA ±184.45 ACRES
RESIDUAL TRACT ±180.81 AC.
LOT 1 3.64 AC.

GRAPHIC SCALE
50 0 25 50 100 200
(IN FEET)
1 inch = 50 ft.

OWNER:
DONALD R. & SARAH L. HUFFMAN REVOCABLE TRUST
1206 HIGHLAND DRIVE
DELMAR, CA 92014
619-417-6439
PARCEL ID: 280-S4-CA
DEED REF: 201210120029475
PARCEL ID: 280-S4-C57
DEED REF: 201210120029475

OWNER:
ACC HOLDINGS LP
160 RALSTON ROAD
SLIPPERY ROCK, PA 16057
PARCEL ID: 280-S4-C51A
DEED REF: 201002170003335
PBV 316 PG 33-35

PLAN BOOK	PAGE
373	43

NORTHERN
SURVEYORS AND ASSOCIATES
137 LINK LANE
SLIPPERY ROCK, PA 16057
(724)530-6889

Scale 1" = 50'
Date Feb. 6, 2018
Job No. 2991

Huffman Lot Line Revision & Consolidation Plan
Situate in Slippery Rock Township Butler County, Pa.
Prepared For Donald Huffman
Sheet No. 1 of 1

Instr: 201809290019871 09/28/2018
Pages:1 F:$45.00 11:41PM
Michele Mustello T20180014320
Butler County Recorder FL

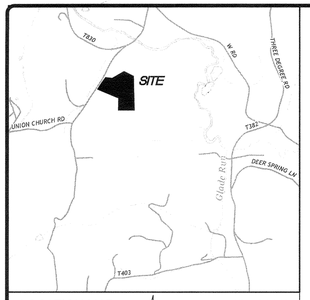

LOCATION MAP (N) 1" = 2000'

N/F
Margaret W. &
James C. Long
Parcel ID: 10-3F70-421
Instr. No.: 201602170003028

EX. LOCUST POST

S62°57'37"E 297.08' (DEED) 296.69' (SURVEY)

EX. T-BAR

EX. PIPE

N61°07'43"E 381.26'

CATCH BASIN

S82°38'37"E 208.03' (DEED) 188.28' (SURVEY)

UP (S-40)

28.51 159.77'

ADDITIONAL 8.5' TO BE DEDICATED FOR PUBLIC ROAD PURPOSES

VALENCIA ROAD - SR 3007
(AKA VALENCIA/ZIMMERMAN ROAD)
(66' R/W)
N35°04'43"E 204.62' (SURVEY)
N35°04'43"E 217.84' (DEED BEARING & TOTAL DISTANCE)
N35°04'43"E 208.37' (SURVEY)
3Y19' (DEED BEARING & TOTAL DISTANCE)
N35°04'43"E 194.05' (SURVEY)
189.86'

UP (S-1/2)

S81°18'09"E 238.62'

12.47'

ROAD ROW
10,067 SQ FT
0.2311 ACRES

LOT 2
418,753 SQ FT
9.6132 ACRES
NON-BUILDING WAIVER

Remnant Parcel
17.0 Ac. +/- Plan
15.4483 Ac. Survey
Tax I.D.
10-3F70-A20

LOT 1
244,114 SQ FT
5.6040 ACRES

N33°54'12"E
N33°54'12"E
25.24

BASIS OF BRG.
Tangent of 381'

UP (V-1074-6)

GRAVEL DRIVEWAY

WELL

SHED

SEPTIC TANK

12" STONE WALL

CONC. PAD

STEPS

CONCRETE PAD

1 STORY FRAME DWELLING

12" ROCK RETAINING WALL

ARRROX. LOCA. ALTERNATE PERC. TEST SITE (PASSED)

EX. STAKE ("PROP. LINE")

GRAVEL DRIVEWAY

+ CATCH BASIN

UP (WP1167-27)

GUY WIRE

615.75'

S66°47'40"E 640.99' (SURVEY) 632.72' (DEED)

20' RESERVE FOR ROW PLAN

20' RESERVE FOR ROW PLAN

ORIGIN UNKNOWN

RIP RAP FLOW PATH

RIP RAP FLOW PATH

S45°18'18"E 916.77'

Plan of Subdivision
Margaret Lengyel
P.B.V. 159 PG. 50

Parcel A
N/F
Lizebeth Adams
Parcel ID: 10-3F70-A20A
Instr. No.: 2309-0759

N2°10'47"E 339.17'

N/F
James A. West Jr. Trust
et al
Parcel ID: 10-3F55-A2
Instr. No.: 201211010031494

EX. STONE

S89°25'52"E 448.26' (SURVEY) 431.58' (DEED)

N/F
James A. West Jr. Trust
et al
Parcel ID: 10-3F55-A2
Instr. No.: 201211010031494

N0°39'27"W 947.55' (SURVEY) 923.24' (DEED)

875.67'

71.87'

SITE AREA TABULATION				
LOT 1	5.6040	ACRES	244,114	SQ.FT.
LOT 2	9.6132	ACRES	418,753	SQ.FT.
ROAD ROW FOR DEDICATION:	0.2311	ACRES	10,067	SQ.FT.
TOTAL PROJECT AREA:	15.4483	ACRES	672,934	SQ.FT.

ZONING DATA	
SITE AREA	
RC (RURAL CONSERVATION DISTRICT)	15.4485 Acres
ZONING INFORMATION (ADAMS TOWNSHIP)	
RC	
SINGLE FAMILY	
LOT DIMENSIONS	
MINIMUM LOT WIDTH	150 FEET
FRONT YARD SETBACK	50 FEET
SIDE YARD SETBACK	20 FEET
REAR YARD SETBACK	25 FEET

GRAPHIC SCALE
60 0 30 60 120 240
(IN FEET)
1 inch = 60 ft.

~~OWNER/DEVELOPER~~
PATRICIA S. HENRY
7325 COUNTRY CLUB RD.
BUTLER, PA 16001
(724) 865-2618

PLAN BOOK	PAGE
373	44

TOWNSHIP OF ADAMS PLANNING COMMISSION | TOWNSHIP OF ADAMS BOARD OF SUPERVISORS | TOWNSHIP OF ADAMS ENGINEER | BUTLER COUNTY PLANNING COMMISSION | BUTLER COUNTY RECORDER

NOTES:
1. ALL DEED OR PLAN BEARINGS AND COORDINATES HAVE BEEN ROTATED AND CONVERTED TO THE NORTH AMERICAN DATUM OF 1983, PENNSYLVANIA STATE PLANE COORDINATE SYSTEM, SOUTH ZONE, U.S. SURVEY FEET.
2. THE UNDERGROUND UTILITIES SHOWN HAVE BEEN LOCATED FROM FIELD SURVEY INFORMATION AND EXISTING DRAWINGS. THE SURVEYOR MAKES NO GUARANTEE THAT THE UNDERGROUND UTILITIES SHOWN COMPRISE ALL UTILITIES IN THE AREA, THE SURVEYOR FURTHER DOES NOT WARRANT THAT THE UNDERGROUND UTILITIES SHOWN ARE IN THE EXACT LOCATIONS INDICATED ALTHOUGH HE DOES CERTIFY THAT THEY ARE LOCATED AS ACCURATELY AS POSSIBLE FROM INFORMATION AVAILABLE. THE SURVEYOR HAS NOT PHYSICALLY LOCATED THE UNDERGROUND UTILITIES.
3. ALL LOTS SHOWN ON THIS PLAN ARE CURRENTLY ZONED RURAL CONSERVATION "RC".
4. PARCEL ID: 10-3F70-A20 IS CURRENTLY SUPPLIED BY WELL WATER
5. PARCEL ID: 10-3F70-A20 IS CURRENTLY SUPPLIED BY SEPTIC TANK. A REQUEST FOR PLANNING WAIVER AND NON-BUILDING DECLARATION HAS BEEN REQUESTED.
6. A HIGHWAY OCCUPANCY PERMIT IS REQUIRED PURSUANT TO § 420 OF THE ACT OF JUNE 1, 1945 (P.L.1242, NO. 428), KNOWN AS THE STATE HIGHWAY LAW, BEFORE DRIVEWAY ACCESS TO A STATE HIGHWAY IS PERMITTED.
7. NO STREAMS WERE FOUND TO BE ON-SITE.

REQUEST FOR PLANNING WAIVER & NON-BUILDING DECLARATION

"AS OF THE DATE OF THIS PLOT PLAN RECORDING, THE PROPERTY/SUBDIVISION DESCRIBED HEREIN IS AND SHALL BE DEDICATED FOR THE EXPRESS PURPOSE OF SETTLING THE ESTATE OF MARGARET LENGYEL. NO PORTION OF LOT 2 OF THIS PROPERTY/SUBDIVISION IS APPROVED BY ADAMS TOWNSHIP OR THE DEPARTMENT OF ENVIRONMENTAL PROTECTION (DEP) FOR THE INSTALLATION OF ANY SEWAGE DISPOSAL FACILITY. NO PERMIT WILL BE ISSUED FOR THE INSTALLATION, CONSTRUCTION, CONNECTION TO OR USE OF ANY SEWAGE COLLECTION, CONVEYANCE, TREATMENT OR DISPOSAL SYSTEM (EXCEPT FOR REPAIRS TO EXISTING SYSTEMS) UNLESS THE MUNICIPALITY AND DEP HAVE BOTH APPROVED SEWAGE FACILITIES PLANNING FOR THE PROPERTY/SUBDIVISION DESCRIBED HEREIN IN ACCORDANCE WITH THE PENNSYLVANIA SEWAGE FACILITIES ACT (35 P.S. SECTIONS 750.1 ET SEQ.) AND REGULATIONS PROMULGATED THEREUNDER. PRIOR TO SIGNING, EXECUTING, IMPLEMENTING OR RECORDING ANY SALES CONTRACT OR SUBDIVISION PLAN, ANY PURCHASER OR SUBDIVIDER OF ANY PORTION OF THIS PROPERTY SHOULD CONTACT APPROPRIATE OFFICIALS OF ADAMS TOWNSHIP, WHO ARE CHARGED WITH ADMINISTERING THE SEWAGE FACILITIES ACT TO DETERMINE THE FORM OF SEWAGE FACILITIES PLANNING REQUIRED AND THE PROCEDURE AND REQUIREMENTS FOR OBTAINING APPROPRIATE PERMITS OR APPROVALS."

INDIVIDUAL ADOPTION AND DEDICATION

KNOW ALL MEN BY THESE PRESENTS, THAT I, PATRICIA S. HENRY, OF THE TOWNSHIP OF ADAMS, OF THE COUNTY OF BUTLER, COMMONWEALTH OF PENNSYLVANIA, FOR MYSELF, MY HEIRS, EXECUTORS, ADMINISTRATORS AND ASSIGNS, DO HEREBY ADOPT THIS PLAN AS MY PLAN OF LOTS OF MY PROPERTY, SITUATE IN ADAMS TOWNSHIP, BUTLER COUNTY, PENNSYLVANIA, AND FOR DIVERS ADVANTAGES ACCRUING TO MY, DO HEREBY IRREVOCABLY DEDICATE ALL STREETS AND OTHER PROPERTY IDENTIFIED FOR DEDICATION ON THE PLAN TO THE PUBLIC. UPON ANY FUTURE ACCEPTANCE OF SAID PUBLIC STREETS OR PROPERTY BY THE COMMONWEALTH OF PENNSYLVANIA, COUNTY OF BUTLER AND TOWNSHIP OF ADAMS, I HEREBY COVENANT AND AGREE TO AND BY THESE PRESENTS DO RELEASE AND FOREVER DISCHARGE SAID COMMONWEALTH OF PENNSYLVANIA, COUNTY OF BUTLER AND TOWNSHIP OF ADAMS, THEIR SUCCESSORS OR ASSIGNS FROM ANY LIABILITY FOR DAMAGES ARISING AND TO ARISE FROM ANY APPROPRIATION OF SAID GROUND FOR PUBLIC HIGHWAYS AND THE PHYSICAL GRADING THEREOF TO ANY GRADES THAT MAY BE ESTABLISHED HEREAFTER AT ANY TIME. THIS DEDICATION AND RELEASE SHALL BE BINDING UPON PATRICIA S. HENRY, MY HEIRS, EXECUTORS, ADMINISTRATORS AND ASSIGNS AND PURCHASERS OF LOTS IN THIS PLAN.

IN WITNESS WHEREOF, I HEREUNTO SET MY HAND AND SEAL THIS 7th DAY OF September, 20 18.

ATTEST:

NOTARY PUBLIC — PATRICIA S. HENRY — WITNESS

INDIVIDUAL ACKNOWLEDGMENT

COMMONWEALTH OF PENNSYLVANIA } SS:
COUNTY OF Beaver }

BEFORE ME, THE SUBSCRIBER, A NOTARY PUBLIC IN AND FOR SAID COMMONWEALTH AND COUNTY, PERSONALLY APPEARED THE ABOVE NAMED PATRICIA S. HENRY AND ACKNOWLEDGED THE FOREGOING RELEASE AND DEDICATION AND PLAN TO BE MY ACT AND DEED AND DESIRED THE SAME TO BE RECORDED AS SUCH.

SWORN TO AND SUBSCRIBED BEFORE ME THIS DAY.

WITNESS MY HAND AND NOTARIAL SEAL, THIS 7th DAY OF September, 2018.

MY COMMISSION EXPIRES THE 12 DAY OF July, 2021.

SEAL

NOTARY PUBLIC

COMMONWEALTH OF PENNSYLVANIA
NOTARIAL SEAL
Mark A. Losnick, Notary Public
Economy Boro, Beaver County
My Commission Expires July 12, 2021
MEMBER, PENNSYLVANIA ASSOCIATION OF NOTARIES

CERTIFICATION OF TITLE WITHOUT MORTGAGE

I HEREBY CERTIFY THAT THE TITLE OF THE PROPERTY CONTAINED IN LENGYEL PLAN OF SUBDIVISION REVISION NO. 1 IS IN THE NAME OF PATRICIA S. HENRY AND IS RECORDED IN D.B.V. 2280, PG. 143. I FURTHER CERTIFY THAT THERE IS NO MORTGAGE, LIEN, OR OTHER ENCUMBRANCE AGAINST THIS PROPERTY.

9-7-2018 DATE — PATRICIA S. HENRY — WITNESS

PROFESSIONAL LAND SURVEYOR CERTIFICATE

I, MARK B. SCHMIDT, A REGISTERED PROFESSIONAL SURVEYOR OF THE COMMONWEALTH OF PENNSYLVANIA, DO HEREBY CERTIFY THAT THIS PLAN SHOWN HEREON IS BASED UPON ACTUAL FIELD SURVEY OF THE LAND DESCRIBED AND THAT ALL ANGLES, DISTANCES, AND COURSES ARE CORRECTLY SHOWN, THAT THE MONUMENTS AND MARKERS SHOWN ON THE PLAT HAVE BEEN SET, AND TO THE BEST OF MY KNOWLEDGE, THAT THIS PLAN CORRECTLY REPRESENTS THE LOTS, LANDS, STREETS AND HIGHWAYS AS SURVEYED AND PLOTTED BY ME FOR THE OWNERS OR AGENTS.

9-6-2018 DATE — REGISTRATION NO. SU-036950-E

TOWNSHIP PLANNING COMMISSION RECOMMENDATION FOR APPROVAL

REVIEWED BY THE ADAMS TOWNSHIP PLANNING COMMISSION THIS 5 DAY OF September, 20 18.

SECRETARY — CHAIRMAN

BOARD OF SUPERVISORS FINAL APPROVAL CERTIFICATE

THE BOARD OF SUPERVISORS OF THE TOWNSHIP OF ADAMS, BUTLER COUNTY, PENNSYLVANIA HEREBY GIVES PUBLIC NOTICE THAT IN APPROVING THIS PLAN FOR RECORDING PURPOSES ONLY, THE APPROVAL OF THIS SUBDIVISION PLAT BY THE TOWNSHIP OF ADAMS DOES NOT CONSTITUTE AN ACCEPTANCE OF THE ROADS, STREETS, ALLEYS, STORMWATER AND SANITARY DRAINAGE FACILITIES, EASEMENTS OR RIGHTS-OF-WAY, WATER MAINS OR ANY OTHER SERVICES OR IMPROVEMENTS SHOWN ON THIS PLAN NOR AN ASSUMPTION OF MAINTENANCE RESPONSIBILITY, NOR WILL THE SAME BE ACCEPTED OR MAINTAINED UNTIL CONSTRUCTED IN ACCORDANCE WITH ALL TOWNSHIP SPECIFICATIONS AND REQUIREMENTS AND OFFICIALLY ACCEPTED BY ACTION OF THE TOWNSHIP BOARD OF SUPERVISORS. THIS PLAT OF SUBDIVISION APPROVED BY ACTION OF THE TOWNSHIP BOARD OF SUPERVISORS OF THE TOWNSHIP OF ADAMS, BUTLER COUNTY, PENNSYLVANIA ON THIS 24 DAY OF September, 20 18

SECRETARY — CHAIRMAN 9/24/18 DATE

SUPERVISOR — SUPERVISOR

SUPERVISOR — SUPERVISOR

BUTLER COUNTY PLANNING COMMISSION CERTIFICATE

REVIEWED BY THE BUTLER COUNTY PLANNING COMMISSION THIS 10 DAY OF July, 20 18.

SECRETARY — CHAIRMAN # 18145

PROOF OF RECORDING:

COMMONWEALTH OF PENNSYLVANIA } SS:
COUNTY OF BUTLER }

RECORDED IN THE OFFICE FOR THE RECORDING OF DEEDS, PLATS AND PLANS IN SAID COUNTY, IN PLAN BOOK VOLUME 373 PAGE(S) 44.

GIVEN UNDER MY HAND AND SEAL OF OFFICE THIS 28 DAY OF September, 2018.

MICHELE M. MUSTELLO
RECORDER OF DEEDS
My Commission Expires First Monday in January 2020
RECORDER OF DEEDS

ADAMS TOWNSHIP - MUNICIPAL ENGINEER CERTIFICATION

I, Ronald Olsen, A REGISTERED PROFESSIONAL ENGINEER FOR THE TOWNSHIP OF ADAMS, DO HEREBY CERTIFY, TO THE BEST OF MY KNOWLEDGE AND BELIEF, THAT THIS SUBDIVISION PLAN MEETS ALL OF THE ENGINEERING REQUIREMENTS SET FORTH IN THE ADAMS TOWNSHIP ZONING ORDINANCE, SUBDIVISION AND LAND DEVELOPMENT ORDINANCE, AND THE PUBLIC AND PRIVATE IMPROVEMENT CODE EXCEPT AS DEPARTURES HAVE BEEN AUTHORIZED BY THE APPROVAL AUTHORITY.

9/11/18 DATE — ENGINEER REGISTRATION NO. - 26400 E

COMMONWEALTH OF PENNSYLVANIA — MARK B. SCHMIDT — PROFESSIONAL SURVEYOR — SURVEYOR'S SEAL — PENNSYLVANIA

X _____

HAMPTON TECHNICAL ASSOCIATES

ENGINEERING LAND SURVEYORS
ESTABLISHED 1960
www.hampton-technical.com

☐ Corporate Office
Etna Technical Center
35 Wilson Street, Suite 201
Pittsburgh, PA 15223
PHONE: (412) 781-9660
FAX: (412) 781-5904

☒ Mars Office
123 Ridge Road, Suite B
Valencia, PA 16059
PHONE: (724) 625-4544
FAX: (724) 625-4549

NO.	DESCRIPTION	DATE

PROJECT STATUS: -

DATE ISSUED: September 4, 2018
REVISIONS:

DRAWING ORIENTATION

PROJECT TITLE:
LENGYEL PLAN OF SUBDIVISION REVISION NO. 1
Tax Parcel 10-3F70-A20

CLIENT ADDRESS:
PATRICIA S. HENRY
7325 COUNTRY CLUB ROAD, BUTLER, PA 16001

PROJECT LOCATION:
415 VALENCIA ROAD, MARS, PA 16046
ADAMS TOWNSHIP, BUTLER COUNTY, PA

DRAWN BY:	CHECKED BY:
ARE	MBS
CAD FILE:	18-12824.dwg
HORZ. SCALE: 1" = 60'	VERT. SCALE: -
SHEET:	1 OF 1
BOUNDARY	
PROJECT #:	12824

Instr:201809280019928 09/28/2018
Pages:1 F:$40.00 2:38PM
Michele Mustello T20180014358
Butler County Recorder FL

N/F S. LOWER

N 88°30'00" E

831.68'

20' BUILDING LINE (SIDE YARD)

N/F L. BOCKSTOCE

770.54'

N 01°30'00" W

25' BUILDING LINE (REAR YARD)

N/F J. WEST TRS.

I.P. SET

EX. I.P.

1,313.01'

481.33'

20' BUILDING LINE (SIDE YARD)

N 09°34'40" W
65.86'

N 08°33'54" W
72.39'

N 05°06'48" W
43.45'

N 03°58'57" E
15.15'

SHED

SEPTIC TANKS

MOBILE HOME

50' BLDG LINE

EX. FIELD SEPTIC

LOT 1
2.07 ACRES

25' BUILDING LINE (REAR YARD)

189.23'

767.97'

CONC PAD

GRAVEL PARKING

GRAVEL DRIVE

S 87°43'23" W

461.93'

I.P. SET

EX. I.P.

22.05'

20.00'

EX POLE BLDG

FRAME GARAGE

WELL

1 STORY FRAME DWELLING

453 VALENCIA ROAD

CONC PAD

WOODEN DECK

POOL

GAS REGULATOR

SEPTIC TANK

SEPTIC FIELD

GV's

SPRING HOUSE

℄ STREAM

TANK LID

℄ PROPOSED 20' DRAINAGE EASEMENT
(SEE DESCRIPTION BELOW)

GAS WELL HOUSE

℄ VALENCIA ROAD S.R. 3007
50' R/W (Paved 21.8')

50' BUILDING LINE

578.74'

N/F J. WEST TRS.

S 01°30'00" E

N/F THOMAS & TAMMY WINKLE
EX. 23.28 ACRES
– 2.07 ACRES LOT 1
REMNANT – LOT 2 21.21 ACRES TOTAL
AFTER CONVEYANCE

20' BUILDING LINE (SIDE YARD)

S 88°50'55" W

762.86'

N/F T. KINNEY

S 87°44'56" W

550.21'

15.33'

N/F R. CHENET

N/F T. KINNEY

VICINITY MAP Scale: 1" = 2000'

SITE

PLAN BOOK	PAGE
373	45

PROPOSED 20' DRAINAGE EASEMENT

a	N 79°39'16" W	20.73'
b	N 62°07'38" W	20.32'
c	N 23°58'59" W	13.58'
d	N 78°19'54" W	20.98'
e	N 63°49'27" W	28.33'
f	N 51°22'02" W	20.15'
g	N 76°42'09" W	34.45'
h	N 55°53'30" W	26.84'
i	N 69°27'42" W	25.68'
j	N 38°43'22" W	13.38'
k	N 79°13'30" W	30.99'
l	N 57°56'30" W	31.78'
m	N 71°32'42" W	38.90'
n	N 55°33'52" W	41.33'
o	N 48°42'30" W	31.24'
p	N 47°33'36" W	27.07'
q	N 69°20'10" W	17.95'
r	N 43°58'25" W	35.96'

We, AgChoice Farm Credit, mortgagee of the property embraced in this plan or subdivision in the names of Thomas and Tammy Winkle, do hereby consent to the recording of said plan in the Recorder's Office of Butler County, Pennsylvania, and to the dedications and covenants appearing hereon.

WITNESS

Alyssa M. Hartzell
AgChoice Farm Credit Representative

0' 50' 100' 150'

NOTES:

SUBJECT TO ANY AND ALL EXISTING RIGHTS–OF–WAY AND EASEMENTS OF RECORD.

ACCORDING TO THE FLOOD INSURANCE RATE MAP PREPARED FOR THIS TOWNSHIP, THIS PROPERTY LIES IN ZONE X – AREAS DETERMINED TO BE OUTSIDE THE 500 YEAR FLOOD PLAIN.

PROPERTY OWNERS: THOMAS & TAMMY WINKLE
453 VALENCIA ROAD
MARS, PA 16046

ZONED: RC: RURAL CONSERVATION
MINIMUM LOT SIZE: 1 ACRE
MINIMUM LOT FRONTAGE: 150' @ FRONT SETBACK
FRONT BUILDING SETBACK: 50'
SIDE BUILDING SETBACK: 20'
REAR BUILDING SETBACK: 25'

KNOW ALL MEN BY THESE PRESENTS, that we, Thomas and Tammy Winkle, of the Township of Adams, of the County of Butler, Commonwealth of Pennsylvania, for ourselves, our heirs, executors, administrators and assigns, do hereby adopt this plan as our Plan of Lots of our property, situate in Adams Township, Butler County, Pennsylvania, and for divers advantages accruing to us, do hereby dedicate forever, for public use for highway purposes all slope areas and all drives, roads, streets, lanes, ways and other public highways shown upon the plan with the same force and effect as if the same had been opened through legal proceedings (and do hereby dedicate forever, for public use, the designated land areas on the plan for recreation and other purposes) and in consideration of the approval of said plan, and any future acceptance of said public highways by the said Commonwealth of Pennsylvania, County of Butler and Township of Adams, we hereby covenant and agree to and by these presents do release and forever discharge said Commonwealth of Pennsylvania, County of butler and Township of Adams, their successors or assigns from any liability for damages arising and to arise from any appropriation of said ground for public highways and the physical grading thereof to any grades that may be established hereafter at any time. This dedication and release shall be binding upon Thomas and Tammy Winkle, our heirs, executors, administrators and assigns and purchasers of lots in this plan.

IN WITNESS WHEREOF, we hereunto set our hands and seals this 4 day of April, 2018.

ATTEST:

NOTARY PUBLIC

OWNER Thomas E. Winkle

OWNER Tammy Winkle

COMMONWEALTH OF PENNSYLVANIA)SS:
COUNTY OF BUTLER)

Before me, the subscriber, a Notary Public in and for said Commonwealth and County, personally appeared the above named Thomas and Tammy Winkle, and acknowledged the foregoing release and dedication and plan to be their act and deed and desired the same to be recorded as such.

Sworn to and subscribed before me this day.
WITNESS MY HAND AND NOTARIAL SEAL this 4 day of April, 20 18.
My Commission Expires the 10 day of June, 2019.

SEAL

NOTARY PUBLIC

COMMONWEALTH OF PENNSYLVANIA
Notarial Seal
Charles W. Kennedy, Notary Public
Adams Twp., Butler County
My Commission Expires June 10, 2019
MEMBER, PENNSYLVANIA ASSOCIATION OF NOTARIES

TITLE CLAUSE (MORTGAGE CLAUSE)
We, Thomas and Tammy Winkle, owners of this plan of subdivision in our names, do hereby certify that the title of this property is in the names of Thomas and Tammy Winkle as recorded in Instrument #200407140023161, Recorder of Deeds Office.

WITNESS OWNER Thomas E. Winkle OWNER Tammy Winkle

We, ~~mortgagee~~ mortgagee of the property embraced in this plan or subdivision in the names of Thomas and Tammy Winkle, do hereby consent to the recording of said plan in the Recorder's Office of Butler County, Pennsylvania and to the dedications and covenants appearing hereon.

N/A

WITNESS MORTGAGEE

I, Cheryl A. Hughes, a Professional Land Surveyor of the Commonwealth of Pennsylvania, do hereby certify, to the best of my knowledge, information and belief, that this plan correctly represents the lots, lands, streets, and highways as surveyed and plotted by me for the owners or agents.

February 14, 2018 DATE SEAL REG. NO. SU-32490-E

COMMONWEALTH OF PENNSYLVANIA REGISTERED PROFESSIONAL Cheryl A. Hughes LAND SURVEYOR SU-32490-E

I, Ronald Olson, a Registered Professional Engineer for the Township of Adams, do hereby certify that this subdivision plan meets all the engineering and design requirements of the Adams Township Subdivision and Zoning Ordinances except such departures authorized by the approving authority.

5/7/18 DATE 26400 E. REG. NO. SIGNATURE

The Board of Supervisors of the Township of Adams hereby gives public notice that in approving this plan for recording purposes only, the Township of Adams assumes no obligations, legal or otherwise, expressed or implied, either to accept said streets as Township streets or roads or grade, pave and curb the streets in said plan, or to construct sewers therein or to install any other such service ordinarily installed in Township streets or roads.

Adams Township agrees not to issue building permit until such time as the Planning Module for Land Development has been reviewed and approved in accordance with the provisions of the rules and regulations of the Pennsylvania Department of Environmental Protection.

SECRETARY SEAL CHAIRMAN

Approved by the Supervisors of the Township of Adams this 26th day of March, 20 18.

SECRETARY SEAL CHAIRMAN

Approved by the Adams Township Planning Commission this 9th day of March, 20 18.

SECRETARY SEAL CHAIRMAN

Reviewed by the Butler County Planning Commission this 5TH day of JAN, 20 18.

SECRETARY SEAL CHAIRMAN

BUTLER COUNTY PLANNING COMMISSION

COMMONWEALTH OF PENNSYLVANIA)SS:
COUNTY OF BUTLER)

Recorded in the Recorder's Office for the recording of deeds, plans, etc. in said County in Plan Book Volume 373 Page 45.

Given under my hand and seal this 28th day of September, 2018.

SEAL

RECORDER

MICHELE M. MUSTELLO
RECORDER OF DEEDS
My Commission Expires First Monday in January 2020

Re–Approved by the Board of Supervisors of the Township of Adams this 27 day of August, 2018.

SECRETARY CHAIRMAN

REVISED: 2/14/18; PROPOSED DRAINAGE EASEMENT

L S J Land Surveyors, Inc.
523 North Main Street
P.O. Box 1061
Butler, PA 16003–1061
(724) 287–6865
Cheryl A. Hughes, PLS Owner

PLAN OF SUBDIVISION

FOR: THOMAS & TAMMY WINKLE

SITUATE: ADAMS TWP., BUTLER CO., PA

Date 12/18/17	Scale 1" = 50'	Dwn By BEC	Ckd By CAH
Parcel No. 010–3F70–A17		Instrument # 200407140023161	Service No. 17–093
Address 453 VALENCIA ROAD			

Instr:201810020020067 10/02/2018
Pages:1 F:$45.00 9:39AM
Michele Mustello T20180014468
Butler County Recorder FL

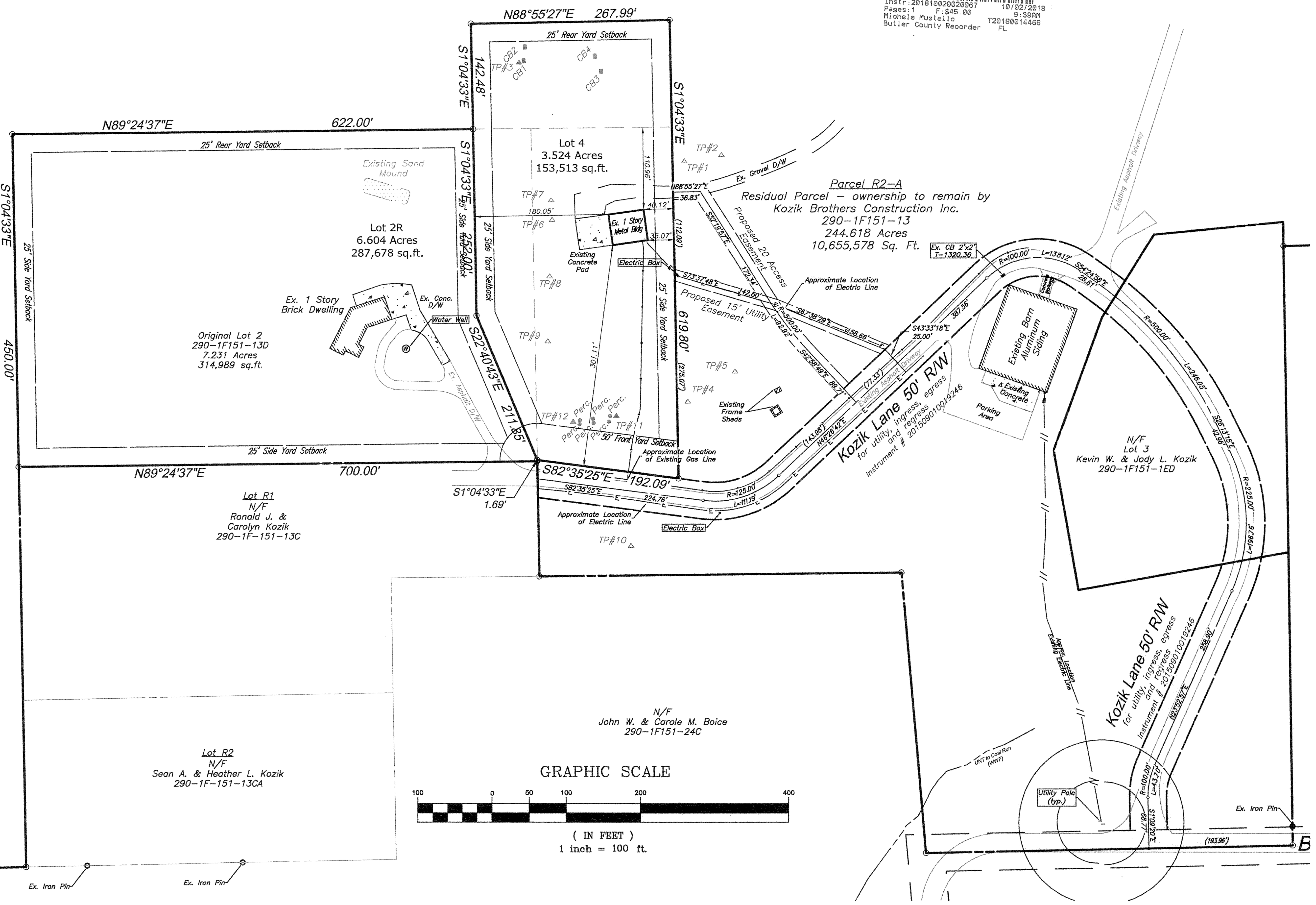

CORPORATE ADOPTION

KNOW ALL MEN BY THESE PRESENTS: THAT KOZIK BROTHERS CONSTRUCTION, INC. UNDER THE LAWS OF THE COMMONWEALTH OF PENNSYLVANIA DOES HEREBY ADOPT THIS PLAN AS ITS PLAN OF LOTS OF ITS PROPERTY SITUATE IN SUMMIT TOWNSHIP, BUTLER COUNTY, PENNSYLVANIA, AND FOR DIVERS ADVANTAGES ACCRUING TO IT, DOES HEREBY DEDICATE FOREVER, FOR PUBLIC USE FOR HIGHWAY PURPOSES, ALL SLOPE AREAS AND ALL DRIVES, ROADS, STREETS, LANES AND WAYS AND OTHER PUBLIC HIGHWAYS SHOWN UPON THE PLAN, WITH THE SAME FORCE AND EFFECT AS IF THE SAME HAD BEEN OPENED THROUGH LEGAL PROCEEDINGS, AND IN CONSIDERATION OF THE APPROVAL OF SAID PLAN, AND ANY FUTURE ACCEPTANCE OF SAID PUBLIC HIGHWAYS BY THE SAID COMMONWEALTH OF PENNSYLVANIA, COUNTY OF BUTLER, AND TOWNSHIP OF SUMMIT, KOZIK BROTHERS CONSTRUCTION, INC. HEREBY COVENANTS AND AGREES TO AND BY THESE PRESENTS DOES RELEASE AND FOREVER DISCHARGE SAID COMMONWEALTH OF PENNSYLVANIA, COUNTY OF BUTLER AND TOWNSHIP OF SUMMIT, THEIR SUCCESSORS OR ASSIGNS FROM ANY LIABILITY FOR DAMAGES ARISING AND TO ARISE FROM THE APPROPRIATION OF SAID GROUND FOR PUBLIC HIGHWAYS AND THE PHYSICAL GRADING THEREOF TO ANY GRADES THAT MAY BE ESTABLISHED HEREAFTER AT ANY TIME. THIS DEDICATION AND RELEASE SHALL BE BINDING UPON KOZIK BROTHERS CONSTRUCTION, INC. ITS SUCCESSORS AND ASSIGNS AND PURCHASERS OF LOTS IN THIS PLAN.

IN WITNESS WHEREOF, THE SAID CORPORATION HAS CAUSED ITS CORPORATE SEAL TO BE AFFIXED BY THE HAND OF ITS PRESIDENT AND SAME TO BE ATTESTED BY ITS SECRETARY THIS 17TH DAY OF September, 2018.

BY: KOZIK BROTHERS CONSTRUCTION, INC.

SECRETARY — PRESIDENT Ronald J. Kozik

CORPORATION ACKNOWLEDGEMENT

COMMONWEALTH OF PENNSYLVANIA SS:
COUNTY OF BUTLER

BEFORE ME, THE SUBSCRIBER, A NOTARY PUBLIC IN AND FOR SAID COMMONWEALTH AND COUNTY PERSONALLY APPEARED Ronald J. Kozik, President OF KOZIK BROTHERS CONSTRUCTION, INC. WHO BEING DULY SWORN, DEPOSETH AND SAID THAT HE WAS PERSONALLY PRESENT AT THE EXECUTION OF THE ADOPTION, RELEASE AND DEDICATION AND SAW THE COMMON AND CORPORATE SEAL OF THE SAID CORPORATION DULY AFFIXED AND THAT THE ABOVE RELEASE AND DEDICATION WAS DULY SIGNED AND SEALED BY AND AS FOR THE ACT AND DEED OF SAID KOZIK BROTHERS CONSTRUCTION, INC. FOR THE USES AND PURPOSES THEREIN MENTIONED AND THAT THE NAME OF THIS DEPONENT SUBSCRIBED TO THE SAID RELEASE AND DEDICATION AS PRESIDENT OF SAID CORPORATION, IN ATTESTATION OF THE DUE EXECUTION AND DELIVERY OF SAID RELEASE AND DEDICATION IS THIS DEPONENT'S OWN AND PROPER AND RESPECTIVE HANDWRITING.

Ronald J. Kozik
PRESIDENT

SWORN AND SUBSCRIBED BEFORE ME THIS DAY.

WITNESS MY HAND AND NOTARIAL SEAL THIS 17th DAY OF September 2018.

MY COMMISSION EXPIRES THE 8th DAY OF February, 2019.

Tracy L. Kurtiak
NOTARY PUBLIC

COMMONWEALTH OF PENNSYLVANIA
NOTARIAL SEAL
Tracy L. Kurtiak, Notary Public
Cranberry Twp., Butler County
My Commission Expires Feb. 8, 2019
MEMBER, PENNSYLVANIA ASSOCIATION OF NOTARIES

SUMMIT TOWNSHIP PLANNING COMMISSION

REVIEWED BY THE PLANNING COMMISSION OF THE TOWNSHIP OF SUMMIT THIS 14th DAY OF August, 2018.

SECRETARY Gary R. McFetridge — CHAIRMAN

SUMMIT TOWNSHIP SUPERVISORS

THE BOARD OF SUPERVISORS OF THE TOWNSHIP OF SUMMIT HEREBY GIVES PUBLIC NOTICE THAT IN APPROVING THIS PLAN FOR RECORDING PURPOSES ONLY, THE TOWNSHIP OF SUMMIT ASSUMES NO OBLIGATIONS, LEGAL OR OTHERWISE, EXPRESSED OR IMPLIED EITHER TO ACCEPT SAID STREETS AS TOWNSHIP STREETS OR ROADS OR GRADE, PAVE AND CURB THE STREETS IN SAID PLAN, OR TO CONSTRUCT SEWERS THEREIN OR TO INSTALL ANY OTHER SUCH SERVICE ORDINARILY INSTALLED IN TOWNSHIP STREETS OR ROADS.

APPROVED BY THE BOARD OF SUPERVISORS OF THE TOWNSHIP OF SUMMIT THIS 5th DAY OF September, 20__

SECRETARY — VICE CHAIRMAN Richard G. Green

SUMMIT TOWNSHIP MUNICIPAL ENGINEER

I, ______________________, A REGISTERED PROFESSIONAL ENGINEER, THE TOWNSHIP ENGINEER OF THE TOWNSHIP OF SUMMIT, DO HEREBY CERTIFY THAT THIS SUBDIVISION PLAN MEETS ALL THE ENGINEERING AND DESIGN REQUIREMENTS OF THE TOWNSHIP SUBDIVISION AND ZONING ORDINANCE EXCEPT AS DEPARTURES HAVE BEEN AUTHORIZED BY THE APPROVING AUTHORITY.

______ DATE ______ REG. NO. ______ (SEAL) ______ SIGNATURE

TITLE CLAUSE

KOZIK BROTHERS CONSTRUCTION, INC. ,OWNERS OF THE KOZIK SUBDIVISION No. 3 DO HEREBY CERTIFY THAT THE TITLE OF THIS PROPERTY IS IN THE NAME OF KOZIK BROTHERS CONSTRUCTION, INC. AS RECORDED IN INSTRUMENT NUMBER 200011270027929 IN THE BUTLER COUNTY RECORDER OF DEEDS OFFICE.

BY: KOZIK BROTHERS CONSTRUCTION, INC.

WITNESS — OWNER Larry L. Kozik

MORTGAGE CLAUSE

WE, NEXTIER BANK, N.A., MORTGAGEE OF THE PROPERTY EMBRACED IN KOZIK SUBDIVISION No. 3 DO HEREBY CONSENT TO THE RECORDING OF SAID PLAN IN THE RECORDER OF DEEDS OFFICE OF BUTLER COUNTY, PENNSYLVANIA, AND TO THE DEDICATIONS AND COVENANTS APPEARING HEREON.

MORTGAGEE Mark A. Kappel — WITNESS

SURVEYOR

I, MARK B. SCHMIDT, A REGISTERED PROFESSIONAL SURVEYOR OF THE COMMONWEALTH OF PENNSYLVANIA, DO HEREBY CERTIFY, TO THE BEST OF MY KNOWLEDGE, THAT THIS PLAN AS SHOWN HEREON IS BASED UPON ACTUAL FIELD SURVEY OF THE LAND DESCRIBED AND THAT ALL ANGLES, DISTANCES AND COURSES ARE CORRECTLY SHOWN, THAT THE MONUMENTS AND MARKERS HAVE BEEN SET AS SHOWN ON THE PLAN, AND THAT THIS PLAN CORRECTLY REPRESENTS THE LOTS, LANDS, STREETS AND HIGHWAYS AS SURVEYED AND PLOTTED BY ME FOR THE OWNERS OR AGENTS.

MARK B. SCHMIDT — DATE 9-13-2018
REGISTRATION NO. SU 36950-E

BUTLER COUNTY PLANNING

REVIEWED BY THE BUTLER COUNTY PLANNING COMMISSION THIS 15TH DAY OF AUG., 2018.

SECRETARY — CHAIRMAN, BUTLER COUNTY PLANNING COMMISSION

BUTLER COUNTY RECORDER

COMMONWEALTH OF PENNSYLVANIA] SS:
COUNTY OF BUTLER]

RECORDED IN THE OFFICE OF THE RECORDER OF DEEDS OF THE COUNTY OF BUTLER, COMMONWEALTH OF PENNSYLVANIA, IN PLAN BOOK VOLUME 373 PAGE(S) 46.

(SEAL) RECORDER OF DEEDS Michele M. Mustello

MICHELE M. MUSTELLO
RECORDER OF DEEDS
My Commission Expires First Monday in January 2020

GIVEN UNDER MY HAND AND SEAL THIS 2 DAY OF October, 2018.

OWNERS ADOPTION

KNOW ALL MEN BY THESE PRESENTS, THAT WE LAWRENCE L. AND JEANETTE M. KOZIK, OF THE TOWNSHIP OF SUMMIT, OF COUNTY OF BUTLER, OF THE COMMONWEALTH OF PENNSYLVANIA, FOR OURSELVES, OUR HEIRS, EXECUTORS, ADMINISTRATORS AND ASSIGN, DO HEREBY ADOPT THIS AS OUR PLAN OF SUBDIVISION OF OUR PROPERTY, SITUATED IN THE TOWNSHIP OF SUMMIT, COUNTY OF BUTLER, COMMONWEALTH OF PENNSYLVANIA, AND FOR DIVER ADVANTAGES ACCRUING TO US, DO HEREBY DEDICATE FOREVER, FOR PUBLIC USE FOR HIGHWAY, DRAINAGE, SEWAGE AND UTILITY PURPOSES, ALL DRIVES, ROADS, LANDS, RIGHTS-OF-WAY, EASEMENTS, WAYS AND OTHER PUBLIC HIGHWAYS SHOWN UPON THE PLAN, WITH THE SAME FORCE AND EFFECT AS IF THE SAME HAD BEEN OPENED THROUGH LEGAL PROCEEDINGS AND IN CONSIDERATION OF THE APPROVAL OF SAID PLAN AND ANY FUTURE ACCEPTANCE OF SAID PUBLIC HIGHWAYS, RIGHTS-OF-WAY AND EASEMENTS BY THE TOWNSHIP OF SUMMIT, OF BUTLER COUNTY, WE LAWRENCE L. AND JEANETTE M. KOZIK. HEREBY AGREE TO AND BY THESE PRESENTS DO RELEASE AND FOREVER DISCHARGE THE TOWNSHIP OF SUMMIT OF BUTLER COUNTY THEIR SUCCESSORS OR ASSIGNS FROM ANY LIABILITY FOR DAMAGES ARISING AND TO ARISE FROM THE APPROPRIATION OF SAID GROUND FOR PUBLIC HIGHWAYS, AND OTHER PUBLIC USES AND THE PHYSICAL GRADING THEREOF TO ANY GRADES THAT MAY BE ESTABLISHED. THIS DEDICATION AND RELEASE SHALL BE BINDING UPON LAWRENCE L. AND JEANETTE M. KOZIK OUR HEIRS, EXECUTORS, ADMINISTRATORS AND ASSIGNS AND PURCHASERS OF LOTS IN THIS PLAN.

IN WITNESS, WHEREOF, WE HEREUNTO SET OUR HANDS AND SEALS THIS 17th DAY OF September A.D. 2018.

ATTEST:

OWNER — OWNER Jeanette M. Kozik

Tracy L. Kurtiak
NOTARY PUBLIC

COMMONWEALTH OF PENNSYLVANIA
NOTARIAL SEAL
Tracy L. Kurtiak, Notary Public
Cranberry Twp., Butler County
My Commission Expires Feb. 8, 2019
MEMBER, PENNSYLVANIA ASSOCIATION OF NOTARIES

CORPORATION ACKNOWLEDGEMENT

COMMONWEALTH OF PENNSYLVANIA SS:
COUNTY OF BUTLER

BEFORE ME, THE SUBSCRIBER, A NOTARY PUBLIC IN AND FOR SAID COMMONWEALTH AND COUNTY PERSONALLY APPEARED Lawrence L. Kozik, Jeanette Kozik WHO ACKNOWLEDGED THE FOREGOING RELEASE AND DEDICATION AND PLAN OF SUBDIVISION TO BE THEIR ACT AND DEED AND DESIRE THE SAME RECORDED AS SUCH.

WITNESS MY HAND AND NOTARIAL SEAL THIS 17th DAY OF Sept., 2018.

Tracy L. Kurtiak
NOTARY PUBLIC

MY COMMISSION EXPIRES THE 8th DAY OF February, 2019.

COMMONWEALTH OF PENNSYLVANIA
NOTARIAL SEAL
Tracy L. Kurtiak, Notary Public
Cranberry Twp., Butler County
My Commission Expires Feb. 8, 2019
MEMBER, PENNSYLVANIA ASSOCIATION OF NOTARIES

TITLE CLAUSE

LAWRENCE L. AND JEANETTE M. KOZIK, OWNERS OF THE KOZIK SUBDIVISION No. 3 DO HEREBY CERTIFY THAT THE TITLE OF THIS PROPERTY IS IN THE NAME OF LAWRENCE L. AND JEANETTE M. KOZIK AS RECORDED IN INSTRUMENT NUMBER 200210280036062 IN THE BUTLER COUNTY RECORDER OF DEEDS OFFICE.

BY: LAWRENCE L. AND JEANETTE M. KOZIK

WITNESS — OWNER
OWNER Jeanette M. Kozik

MORTGAGE CLAUSE

WE, NEXTIER BANK, N.A., MORTGAGEE OF THE PROPERTY EMBRACED IN KOZIK SUBDIVISION No. 3 DO HEREBY CONSENT TO THE RECORDING OF SAID PLAN IN THE RECORDER OF DEEDS OFFICE OF BUTLER COUNTY, PENNSYLVANIA, AND TO THE DEDICATIONS AND COVENANTS APPEARING HEREON.

MORTGAGEE Mark A. Kappel — WITNESS

Residential R-1 Zoning District

Set Backs	
Min Front Yard	50 feet
Min Rear Yard	25 feet
Min Side Yard	25 feet

Utility Companies and Authorities

Sewage Collection/Treatment	= Onlot Septic
Water Service	= Onlot Well
Electric Service	= Center Electric
Gas Service	= Peoples Gas

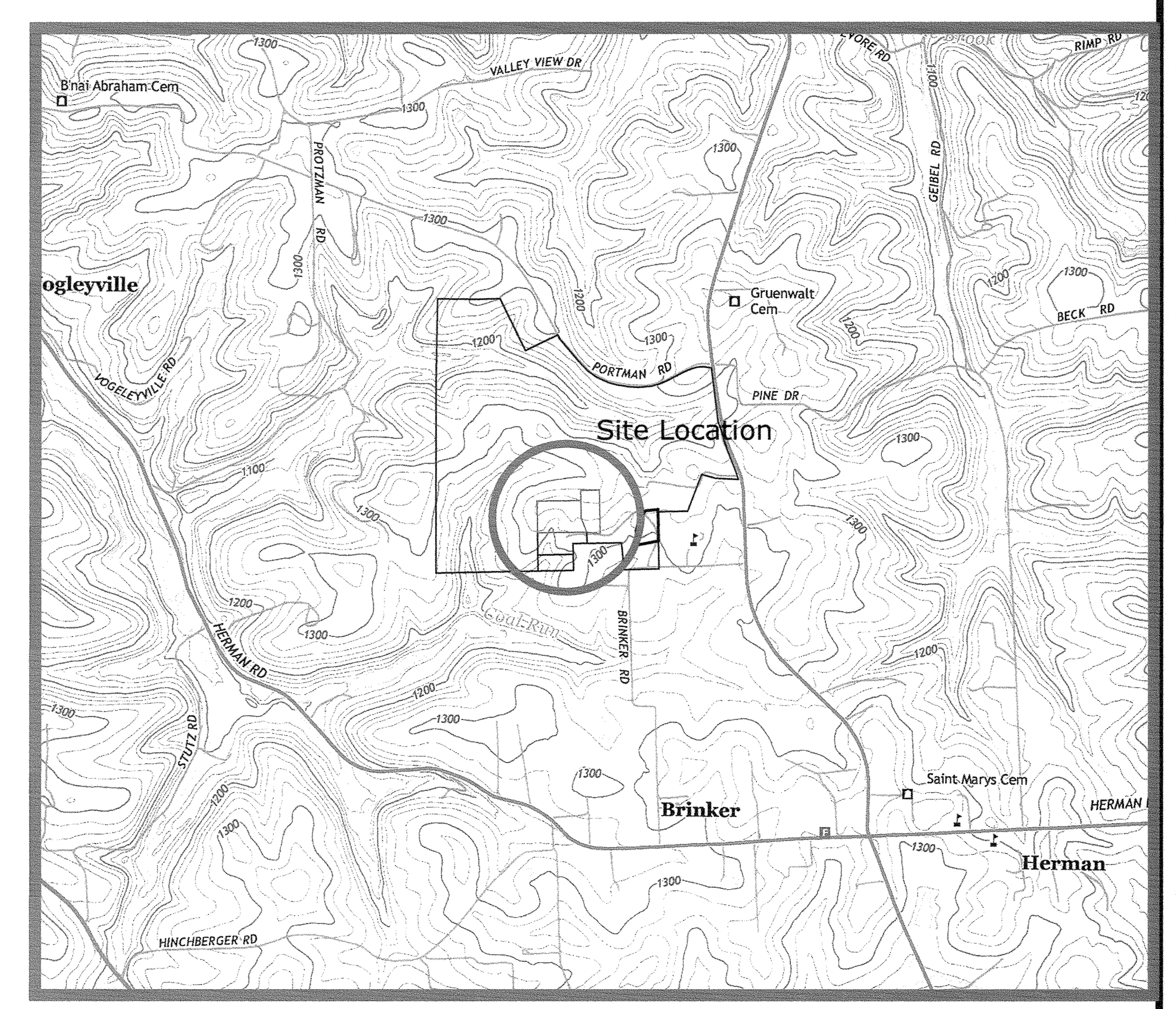

LOCATION MAP SCALE
Saxonburg, PA Quad, = 1"= 2000'

NOTE:

1. Subject to any and all existing rights-of-way and easements of record.
2. All conveyances under this plan are subject to the grantees, their heirs, successors and assigns sharing equally in the costs and expenses of maintaining any and all easements and rights of way in good repair. In the furtherance thereof all purchasers, heirs, successors and assigns shall be required to be a party to a written maintenance agreement..

PLAN BOOK	PAGE
373	46

Summit Township Planning Commission	Summit Township Board of Supervisors	Summit Township Municipal Engineer	Butler County Planning Commission	Butler County Recorder of Deeds Office
			BUTLER COUNTY PLANNING COMMISSION (seal)	RECORDER OF DEEDS BUTLER COUNTY, PA (seal)

X\18-XXXX Jobs\18-10000 Jobs\18-10019\Production Drawings\17-10019.dwg, REC1, 9/12/2018 2:15 PM, Mark Lesnick

X ______________

HAMPTON TECHNICAL ASSOCIATES
ENGINEERING LAND SURVEYORS
ESTABLISHED 1960
www.hampton-technical.com

☐ Corporate Office
Etna Technical Center
35 Wilson Street, Suite 201
Pittsburgh, PA 15223
PHONE: (412) 781-9660
FAX: (412) 781-5904

☒ Mars Office
123 Ridge Road, Suite B
Valencia, PA 16059
PHONE: (724) 625-4544
FAX: (724) 625-4549

PROJECT STATUS:

DATE ISSUED: June 26, 2018

REVISIONS: NO.	DESCRIPTION	DATE
1	Address Municipal Comments	July 16, 2018

DRAWING ORIENTATION

PROJECT TITLE:
Kozik Subdivision No. 3
Plan for Recording

PROJECT LOCATION:
Summit Township
Butler County, Pennsylvania

CLIENT ADDRESS:
Lawrence L. & Jeanette M. Kozik
310 Kozik Lane Butler, Pa. 16002

DRAWN BY: Mal	CHECKED BY: Mal
CAD FILE: 17-10019.dwg	
HORZ. SCALE: 1" = 100'	VERT. SCALE: -
SHEET: — OF	REC.1
PROJECT #: 10019-3	

ADJOINERS SOUTH OF ISLE ROAD:

No.	NAME	TAX ID No.	DEED RECORDING
1	ERICA PENNINGTON	170-S3-A58A	INSTR. No. 201304020009270
2	ERICA PENNINGTON	170-S3-A56	INSTR. No. 201304020009270
3	LAKE ARTHUR COUNTRY CLUB	170-S3-A55	DBV 1305, Pg. 167
4	LAKE ARTHUR COUNTRY CLUB	170-S3-AB	DBV 1210, Pg. 810
5	LAKE ARTHUR COUNTRY CLUB	170-S3-A54	DBV 1305, Pg. 167
6	LAKE ARTHUR COUNTRY CLUB	170-S3-A53	DBV 1640, Pg. 76
7	LAKE ARTHUR COUNTRY CLUB	170-S3-A52	DBV 1890, Pg. 159
8	LAKE ARTHUR COUNTRY CLUB	170-S3-A51	DBV 1644, Pg. 314
9	LAKE ARTHUR COUNTRY CLUB	170-S3-A50	DBV 1644, Pg. 314
10	SUSAN BENYA & THOMAS BENYA	170-S3-A49	INSTR. No. 201608230017209
11	SUSAN BENYA & THOMAS BENYA	170-S3-A48	INSTR. No. 201608230017209
12	ANDREW P. OTTOVIANI & SUE A. OTTOVIANI	170-S3-A47	DBV 1672, Pg. 165
13	ANDREW P. OTTOVIANI & SUE A. OTTOVIANI	170-S3-A45	INSTR. No. 200604210009251
14	ROBERT C. RAIDA & JOHANNA RAIDA	170-S3-A43	DBV 1441, Pg. 422
15	LAKE ARTHUR COUNTRY CLUB	170-S3-A42	DBV 1632, Pg. 28
16	LAKE ARTHUR COUNTRY CLUB	170-S3-A41	DBV 1632, Pg. 25
17	LAKE ARTHUR COUNTRY CLUB	70-S3-A40	DBV 1696, Pg. 61
18	JEREMY SCHOEPPNER & KAREN SCHOEPPNER	170-S3-A38	INSTR. No. 201109140021955
19	RICHARD C. REDDICK & BARBARA J. REDDICK	170-S3-A36	DBV 948, Pg. 0507
20	RICHARD C. REDDICK & BARBARA J. REDDICK	170-S3-A35	DBV 3026, Pg. 527
21	RICHARD C. REDDICK & BARBARA J. REDDICK	170-S3-A34	DBV 3026, Pg. 527
22	TIMOTHY G. HAWK & HANNAH N. HAWK	170-S3-A33	INSTR. No. 201705030009216
23	TIMOTHY G. HAWK & HANNAH N. HAWK	170-S3-A31	INSTR. No. 201705030009216
24	TIMOTHY G. HAWK & HANNAH N. HAWK	170-S3-A32	INSTR. No. 201705030009216
25	PAMELA WITHAM	170-S2-C9A	INSTR. No. 201711160025250
26	WILLIAM H. SCHMIDT & PATRICIA A. SCHMIDT	170-S2-05	DBV 1172, Pg. 705
26	CARL J. SMITH & MARSHA R. SMITH	170-S2-C9B	DBV 1117, Pg. 683
27	ERICA L. VICE & BILLY SCOTT	170-S2-C8B	INSTR. No. 201604010006025
28	LARRY J. McKIVIGAN & ROBERTA L. McKIVIGAN	170-S2-C8	INSTR. No. 200911300027957
29	LARRY J. McKIVIGAN & ROBERTA L. McKIVIGAN	170-S2-C8C	DBV 1854, Pg. 226
30	LARRY J. McKIVIGAN & ROBERTA L. McKIVIGAN	170-S2-C8C	DBV 1854, Pg. 226
31	RICHARD L. McKIVIGAN & SANDY E. GALICH	170-S2-C7	DBV 1854, Pg. 226
32	PAUL D. THROM & DENISE M. THROM	170-S2-C6A	DBV 1065, Pg. 0631
33	KENNETH J. CRESS & REBECCA L. CRESS	170-S2-06	DBV 1857, Pg. 344
34	ROCCO E. LUCCO & MARY D. LUCCO	170-S2-C4	DBV 1070, Pg. 870
35	WILLIAM H. SCHMIDT & PATRICIA A. SCHMIDT	170-S2-05	DBV 1172, Pg. 705
36	ERNESTE WEITZEL & LYNDA E. WEITZEL	170-S2-C3	DBV 1091, Pg. 323
37	MARK J. PETERS	170-S2-C2	INSTR. No. 201605310010461
38	MARK J. PETERS	170-S2-C1	INSTR. No. 201605310010461

ADJOINERS SOUTH OF SWAMP RUN ROAD:

No.	NAME	TAX ID No.	DEED RECORDING
I	ROBERT C. HAYES & BONNIE J. HAYES	60-S6-E8A	DBV 2563, Pg. 581
II	ROBERT C. HAYES & BONNIE J. HAYES	60-S6-E8A	DBV 915, Pg. 502
III	SHAWN P. MORTER & EVA R. MORTER	60-S6-E8	INSTR. No. 200606090014029
IV	JOSEPH V. MACKALICA & CATHY J. MACKALICA	60-S6-E7	DBV 1485, Pg. 233
V	JOSEPH V. MACKALICA & CATHY J. MACKALICA	60-S6-E9	DBV 1086, Pg. 729
VI	MICHAEL R. KALTENBACH & BRADENE L. KALTENBACH	60-S6-E10	INSTR. No. 201701900228 39
VII	MICHAEL R. KALTENBACH & BRADENE L. KALTENBACH	60-S6-E11	INSTR. No. 201701900228 39

BEARINGS & DISTANCES:

PENNSYLVANIA STATE PLANE, NAD83:

			DEED:		
A	S 45°06'42" E	102.36'	S 47°21'12" E	102.36'
B	S 46°55'37" E	103.45'	S 49°10'07" E	103.45'
C	S 48°18'15" E	105.35'	S 50°32'45" E	105.35'
D	S 50°09'51" E	74.77'	S 52°24'21" E	74.77'
E	S 52°21'09" E	75.40'	S 54°35'39" E	75.40'
F	S 53°56'53" E	75.59'	S 56°11'23" E	75.59'
G	S 55°33'07" E	74.65'	S 57°47'37" E	74.65'
H	S 56°49'04" E	75.15'	S 59°03'34" E	75.15'
I	S 58°12'50" E	76.01'	S 60°27'20" E	76.01'
J	S 59°48'58" E	77.38'	S 62°03'28" E	77.38'
K	S 61°12'42" E	77.55'	S 63°27'12" E	77.55'
L	S 62°31'56" E	75.88'	S 64°46'26" E	75.88'
M	S 64°35'40" E	75.17'	S 66°50'10" E	75.17'
N	S 65°58'42" E	96.35'	S 68°13'12" E	96.35'
O	S 67°20'57" E	204.00'	S 69°35'27" E	204.00'

ACREAGE:

NEW LOT No.	OLD LOT No.	TAX MAP ID NUMBER	ORIGINAL ACREAGE AS PLOTTED	PROPOSED ACREAGE	RIGHT-OF-WAY SQUARE FEET
A	1	170-3F41-A2B	40.6968	282.3802	12784
	2	170-3F41-A1	100.7300		
	3	170-3F82-14	13.1688		11362
	4	170-3F82-10A	34.1370		4298
	5	170-3F39-A10	101.9303		60030
SUBTOTAL			290.6629		88473
B	6	60-3F41-20	113.5424	221.0000	27394
	7	60-3F41-21	99.1749		60308
SUBTOTAL			212.7173		87702
TOTAL			503.3802	503.3802	176176

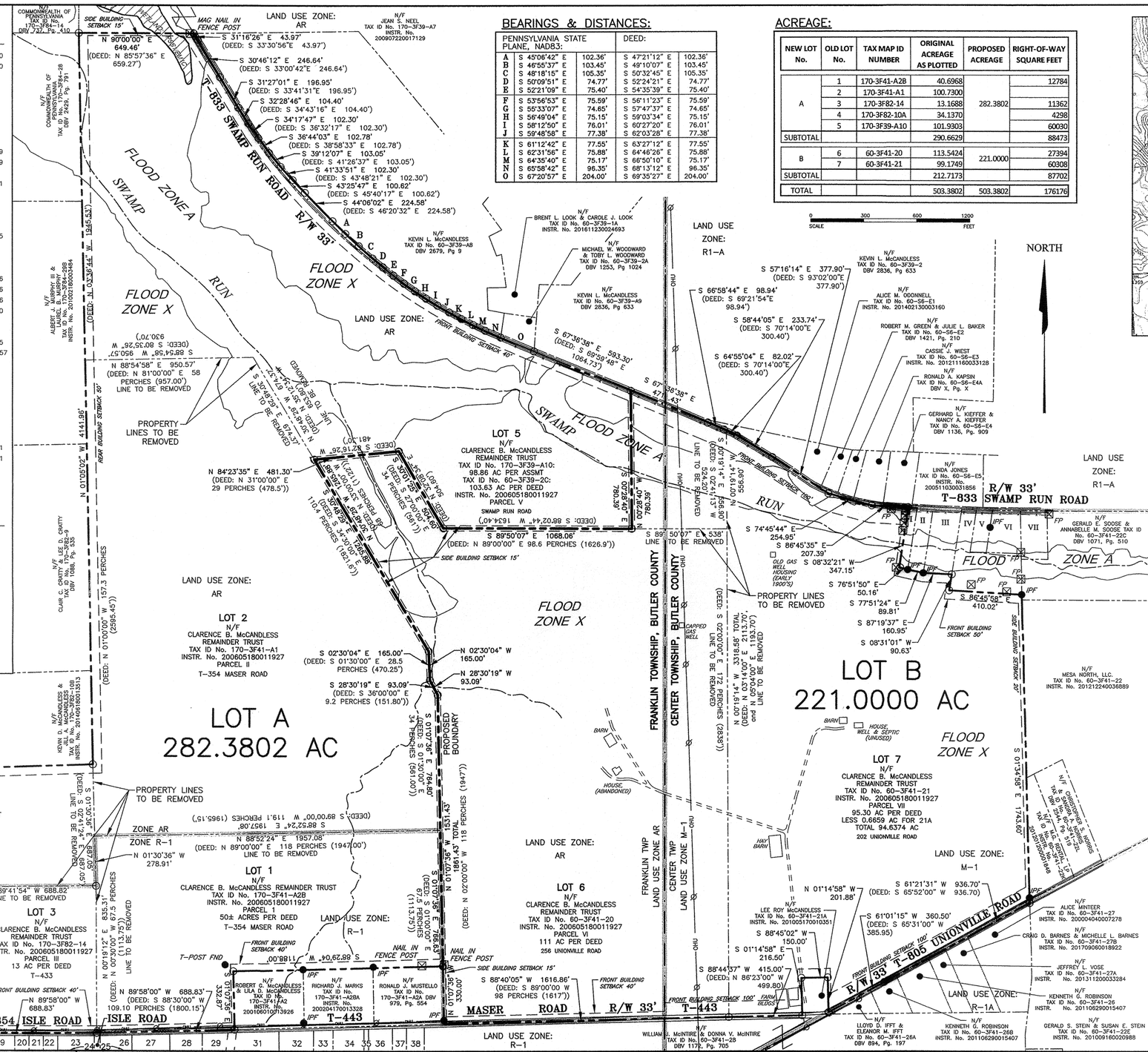

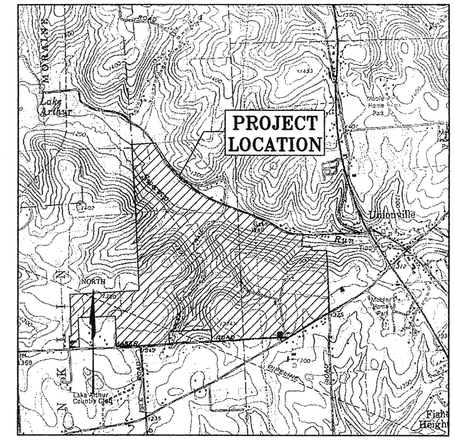

VICINITY MAP

SCALE: 1"=2000'

SOURCE: U.S.G.S. TOPOGRAPHICAL QUADRANGLE, MOUNT CHESTNUT, PENNSYLVANIA 7.5 MINUTE SERIES, 1964 (REV 1993)

LEGEND:

- FLOOD ZONE A
- WETLANDS
- TOWNSHIP LINE
- PROPOSED PROPERTY LINE
- PROPERTY LINES TO BE REMOVED
- EXISTING PROPERTY LINES
- ADJOINING PROPERTY LINES
- RIGHT-OF-WAY LINES
- EASEMENT LINES
- ZONING BOUNDARY LINES
- IPF PROPERTY MONUMENT
- PROPERTY CORNER
- FENCE LINE
- FENCE POST
- UTILITY POLE

Instr# 201810020020099 10/02/2018
Pages:2 F 595.00 12:08PM
Michele Mustello T20180014485
Butler County Recorder FL

PURPOSE:

THIS PLAN WILL CONSOLIDATE THE SEVEN PARCELS DESCRIBED IN INSTRUMENT No. 200605180011927 AND DIVIDE THE ENTIRETY INTO TWO PARCELS, TO BE USED FOR AGRICULTURAL PURPOSES.

OWNER:

CLARENCE B. McCANDLESS REMAINDER TRUST
LEE ROY McCANDLESS, TRUSTEE
240 UNIONVILLE ROAD; BUTLER, PA 16001
724-290-4608

FLOOD:

FEMA FIRM MAPPING:
MAP NUMBER: 42019C0290D EFFECTIVE AUG. 2, 2018
MAP NUMBER: 42019C0280D EFFECTIVE AUG. 2, 2018

ZONE A:
- SPECIAL FLOOD HAZARD AREAS SUBJECT TO INUNDATION BY THE 1% ANNUAL CHANCE FLOOD (100 YEAR FLOOD).
- NO BASE FLOOD ELEVATIONS DETERMINED.
- AS SHOWN ON PLAN.

ZONE X:
- AREAS DETERMINED TO BE OUTSIDE THE 0.2% ANNUAL CHANCE FLOOD.

WETLANDS:

PSS1/EM1C:
- ESTUARINE AND MARINE WETLAND: FOUND ALONG SWAMP RUN ON NORTH SIDE OF PROPERTY.

SURVEY NOTES:

- AS THIS IS A COMPILATION OF NUMEROUS SURVEYS THE FINAL PROPERTY BEARINGS ARE BASED ON THE PENNSYLVANIA STATE PLANE SOUTH COORDINATE SYSTEM, NAD 83.
- BEARINGS IN PARENTHESES ARE FROM PREVIOUS DEEDS AND PLANS.

REFERENCES

REF. #	DESCRIPTION
1	Land Surveyors, Inc.; *Plan of Subdivision;* March 6, 2001; Recorded: May 22, 2001 at PBV 242, Pg. 2.
2	Land Surveyors, Inc.; *Plan of Subdivision;* March 8, 2001; Recorded: May 8, 2001 at PBV 241, Pg. 28.
3	W. J. McGarvey, PE.: *Trimble Subdivision No. 3;* July 7, 1995; Recorded: July 28, 1995 at PBV 185, Pg. 18.
4	W. J. McGarvey, PE.: *Trimble Subdivision No. 1;* June 20, 1985; Recorded: July 17, 1985 at PBV 106, Pg. 22.
5	P.A.S.D.A; Contouring at 2 foot interval.

REVISIONS

REV.	REVISION DESCRIPTION	DATE	BY	CHKD	APPR
1	REVISED PER COMMENTS FROM CENTER TWP ENGINEER & PLANNING COMMISSION	06/11/18	BJE	PJN	PJN

PLAN BOOK 373 PAGE 47

PEDERSEN & PEDERSEN
Civil and Environmental Engineering/Surveying
441 Mars-Valencia Road, Suite 200
Valencia, PA. 16059
724-898-3300
FAX 724-625-1329

COMMONWEALTH OF PENNSYLVANIA REGISTERED PROFESSIONAL PAUL J. NEFF LAND SURVEYOR 049584 PENNSYLVANIA

CLIENT: CLARENCE B. McCANDLESS REMAINDER TRUST
240 UNIONVILLE ROAD, BUTLER, PENNSYLVANIA 16001

PROJECT: EXISTING CONDITIONS

BEING
MULTIPLE TAX PARCELS
LOCATED AT: INSTRUMENT No. 200605180011927
CENTER & FRANKLIN TOWNSHIPS, BUTLER COUNTY, PENNSYLVANIA

DRAWN	BJE
CHECKED	PJN
APPROVED	PJN
DATE	06/11/18
ISSUE DATE	06/11/18
REV. #	1
PROJECT #	18-007
SCALE	1"=300'
DWG #	EC-1
SHEET	1 OF 1

PLEASE USE A BLACK FELT TIP MARKER FOR SIGNATURES

OWNERS ADOPTION

I LEE ROY McCANDLESS, TRUSTEE, OF THE CLARENCE B. McCANDLESS REMAINDER TRUST OF THE LAND SHOWN ON THE CLARENCE B. McCANDLESS REMAINDER TRUST CONSOLIDATION & LOT LINE REVISION PLAN No. 1, HEREBY ADOPT THIS AS IT'S PLAN OF SUBDIVISION AND IRREVOCABLY DEDICATE ALL STREETS AND OTHER PROPERTY IDENTIFIED FOR DEDICATION ON THE PLAN TO THE PUBLIC. ANY FUTURE ACCEPTANCE OF SAID PUBLIC STREETS OR PROPERTY BY THE COMMONWEALTH OF PENNSYLVANIA, COUNTY OF BUTLER, TOWNSHIP OF FRANKLIN AND TOWNSHIP OF CENTER, THE TRUST HEREBY COVENANTS AND AGREES TO AND BY THESE PRESENTS, DOES RELEASE AND FOREVER DISCHARGE THE COMMONWEALTH OF PENNSYLVANIA, COUNTY OF BUTLER, TOWNSHIP OF FRANKLIN AND TOWNSHIP OF CENTER, THEIR SUCCESSORS OR ASSIGNS FROM ANY LIABILITY FOR DAMAGES ARISING AND TO ARISE FROM THE APPROPRIATION OF SAID GROUND FOR PUBLIC STREETS OR PROPERTY AND OTHER PHYSICAL GRADING THEREOF TO ANY GRADES THAT MAY BE ESTABLISHED. THIS ADOPTION AND DEDICATION SHALL BE BINDING UPON IT'S HEIRS, EXECUTORS, AND ASSIGNS

IN WITNESS WHEREOF, I HEREUNTO SET MY HAND AND SEAL THIS 1st DAY OF October, A.D. 20 18.

ATTEST: Clarence B. McCandless Remainder Trust

Lee Roy McCandless Trustee (SEAL)

TRUSTEE: LEE ROY McCANDLESS

Commonwealth of Pennsylvania – Notary Seal
Jarah Roxberry, Notary Public
Butler County
My Commission Expires February 24, 2022
Commission Number 1281872

(SEAL)

NOTARY PUBLIC

MY COMMISSION EXPIRES THE 24 DAY OF Feb A.D., 2022

INDIVIDUAL ACKNOWLEDGEMENT

COMMONWEALTH OF PENNSYLVANIA }
} §:
COUNTY OF BUTLER }

THIS RECORD WAS ACKNOWLEDGED BEFORE ME 1st DAY OF October 20 18.

BY LEE ROY McCANDLESS AS TRUSTEE WHO REPRESENT THAT HE IS AUTHORIZED TO ACT ON BEHALF OF WHOM THE RECORD WAS EXECUTED.

WITNESS MY HAND AND NOTARIAL SEAL THIS 1st DAY OF October, 20 18.

SEAL NOTARY PUBLIC.

MY COMMISSION EXPIRES THE 24 DAY OF Feb, 20 22.

NOTARY

Commonwealth of Pennsylvania – Notary Seal
Jarah Roxberry, Notary Public
Butler County
My Commission Expires February 24, 2022
Commission Number 1281872

CERTIFICATION OF TITLE:

I HEREBY CERTIFY THAT THE TITLE TO THE PROPERTY CONTAINED IN THE CLARENCE B. McCANDLESS REMAINDER TRUST CONSOLIDATION & LOT LINE REVISION PLAN No. 1 IS IN THE NAME OF THE CLARENCE B. McCANDLESS REMAINDER TRUST AND IS RECORDED IN DEED INSTRUMENT No. 200605180011927. I ALSO CERTIFY THAT THERE IS NO MORTGAGE ON THIS PROPERTY.

WITNESS

Lee Roy McCandless Trustee
TRUSTEE: LEE ROY McCANDLESS

ZONING:

FRANKLIN TOWNSHIP:
A–R: AGRICULTURAL–RESIDENTIAL
R–1: RURAL RESIDENTIAL

CENTER TOWNSHIP:
M–1: LIGHT INDUSTRIAL

	FRANKLIN TWP:		CENTER TWP:	
	A–R:	R–1:	M–1:	
MINIMUM LOT SIZE:	43,560 Sq.Ft.	43560 Sq.Ft.	43,560 Ft.	
MINIMUM LOT WIDTH:	100 Ft.	100 Ft.	100 Ft.	
MAXIMUM HEIGHT:	40 Ft.	40 Ft.	35 Ft. (W–SPRINKLER 75 Ft.)	
BUILDING SETBACKS:			ABUTTING RES DIST.	NOT ABUTTING RES. DIST
FRONT:	40 Ft.	40 Ft.	100 Ft.	50 Ft.
SIDE:	15 Ft.	15 Ft.	100 Ft.	20 Ft.
REAR:	50 Ft.	50 Ft.	100 Ft.	25 Ft.

PLEASE USE A BLACK FELT TIP MARKER FOR SIGNATURES

FRANKLIN TOWNSHIP APPROVAL:

THE BOARD OF SUPERVISORS OF THE TOWNSHIP OF FRANKLIN HEREBY GIVE PUBLIC NOTICE THAT IN APPROVING THIS PLAN FOR RECORDING PURPOSES, THE TOWNSHIP OF FRANKLIN ASSUMES NO OBLIGATIONS, LEGAL OR OTHERWISE, TO ACCEPT ALL STREETS AND OTHER PROPERTY IDENTIFIED FOR DEDICATION ON THE PLAN.

APPROVED BY THE BOARD OF SUPERVISORS OF THE TOWNSHIP OF FRANKLIN ~~BY RESOLUTION~~ No. _____, EFFECTIVE THIS 20th DAY OF August, 2018.

Herman W Bauer CHAIRPERSON, BOARD OF SUPERVISORS.

SEAL

FRANKLIN TOWNSHIP PLANNING COMMISSION:

REVIEWED BY THE PLANNING COMMISSION OF FRANKLIN TOWNSHIP THIS 20th DAY OF August, 2018.

Robert J. Thompson CHAIRPERSON, PLANNING COMMISSION.

CENTER TOWNSHIP PLANNING COMMISSION APPROVAL:

THIS PLAT OF SUBDIVISION HAS BEEN APPROVED BY THE PLANNING COMMISSION OF THE TOWNSHIP OF CENTER, BUTLER COUNTY, PENNSYLVANIA ON THIS 23rd DAY OF May, A. D., 2018.

ATTEST:

(SEAL) SECRETARY

(SEAL) CHAIRMAN

CENTER TOWNSHIP APPROVAL:

THE BOARD OF SUPERVISORS OF THE TOWNSHIP OF CENTER, BUTLER COUNTY, PENNSYLVANIA, HEREBY GIVES PUBLIC NOTICE THAT IT IS APPROVING THIS PLAN OF SUBDIVISION FOR RECORDING PURPOSES ONLY. THE APPROVAL OF THIS SUBDIVISION PLAT BY THE TOWNSHIP OF CENTER DOES NOT CONSTITUTE AN ACCEPTANCE OF THE ROADS, STREETS, ALLEYS, STORM WATER AND SANITARY SEWAGE DRAINAGE FACILITIES, EASEMENTS OR RIGHTS–OF–WAY, WATER MAINS OR ANY OTHER SERVICES OR IMPROVEMENTS SHOWN ON THIS PLAN NOR AN ASSUMPTION OF MAINTENANCE RESPONSIBILITY, NOR WILL THE SAME BE ACCEPTED OR MAINTAINED UNTIL CONSTRUCTED IN ACCORDANCE WITH ALL TOWNSHIP SPECIFICATIONS AND REQUIREMENTS AND OFFICIALLY ACCEPTED BY ACTION OF THE BOARD OF SUPERVISORS.

THIS PLAT OF SUBDIVISION APPROVED BY RESOLUTION OF THE BOARD OF SUPERVISORS OF THE TOWNSHIP OF CENTER, BUTLER COUNTY, PENNSYLVANIA ON THIS 24th DAY OF August, A. D., 2018.

ATTEST:

SECRETARY OF BOARD

Ronald E Flatt CHAIRMAN OF BOARD

SEAL:

BUTLER COUNTY PLANNING COMMISSION:

REVIEWED BY THE BUTLER COUNTY PLANNING COMMISSION THIS 7TH DAY OF May, 2018

CHAIRPERSON, BUTLER COUNTY PLANNING COMMISSION.

SEAL

PROFESSIONAL LAND SURVEYOR CERTIFICATE:

I, CERTIFY TO THE BEST OF MY KNOWLEDGE, THAT THE SURVEY AND PLAN SHOWN HEREON CORRECTLY REPRESENTS THE LOTS, LANDS, STREETS, AND HIGHWAYS AS SURVEYED AND PLOTTED BY ME.

SEAL 6-11-18 DATE

Paul J. Neff Reg. No. SU051242
pneff@pedersenx2.com

PROOF OF RECORDING:

COMMONWEALTH OF PENNSYLVANIA }
} §:
COUNTY OF BUTLER }

RECORDED IN THE OFFICE OF THE RECORDER OF DEEDS IN THE COUNTY OF BUTLER, COMMONWEALTH OF PENNSYLVANIA, IN PLAN BOOK VOLUME 343 PAGE(S) 47-48.

GIVEN UNDER MY HAND AND SEAL THIS 2 DAY OF October, 2018.

RECORDER OF DEEDS

MICHELE M. MUSTELLO
RECORDER OF DEEDS
My Commission Expires First Monday in January 2020

PLAN BOOK	PAGE
373	48

PLEASE USE A BLACK FELT TIP MARKER FOR SIGNATURES

APPROVED VARIANCES AND/OR MODIFICATIONS:

ON 11th DAY OF July, 2018 A VARIANCE WAS GRANTED BY CENTER TOWNSHIP ZONING BOARD TO ORDINANCE No. 14, ARTICLE No. XIV, SECTION No. 14-403, SUBSECTION No. B3, TO ALLOW THE DRAWING SCALE TO BE 1"=300' RATHER THAN THE REQUIRED 1"=100'.

HIGHWAY CERTIFICATION:

A HIGHWAY OCCUPANCY PERMIT IS REQUIRED PURSUANT TO SECTION 420 OF THE ACT OF JUNE 1, 1945 (P.L. 1242, No. 428), KNOWN AS THE "STATE HIGHWAY LAW" BEFORE DRIVEWAY ACCESS TO A STATE HIGHWAY IS PERMITTED.

FRANKLIN / CENTER TOWNSHIPS: REQUEST FOR PLANNING WAIVER & NON–BUILDING DECLARATION OF SEWAGE FACILITIES:

AS OF THE DATE OF THIS PLAN'S RECORDING, THE PROPERTY PLAN DESCRIBED HEREIN IS AND SHALL BE DEDICATED FOR THE EXPRESS PURPOSE OF AGRICULTURAL USE. NO PORTION OF THIS PROPERTY IS APPROVED BY FRANKLIN TOWNSHIP OR CENTER TOWNSHIP OR THE DEPARTMENT OF ENVIRONMENTAL PROTECTION (DEP) FOR THE INSTALLATION OF ANY SEWAGE DISPOSAL FACILITY. NO PERMIT WILL BE ISSUED FOR THE INSTALLATION, CONSTRUCTION, CONNECTION TO OR USE OF ANY SEWAGE COLLECTION, CONVEYANCE, TREATMENT, OR DISPOSAL SYSTEM (EXCEPT FOR REPAIRS TO EXISTING SYSTEMS) UNLESS FRANKLIN TOWNSHIP AND/OR CENTER TOWNSHIP MUNICIPALITY AND THE DEP HAVE ALL APPROVED SEWAGE FACILITIES PLANNING FOR THE PROPERTY DESCRIBED HEREIN IN ACCORDANCE WITH THE PENNSYLVANIA SEWAGE FACILITIES ACT (35 P.S. §750.1 *ET. SEQ.*) (ACT) AND REGULATIONS PROMULGATED THEREUNDER. PRIOR TO SIGNING, EXECUTING, IMPLEMENTING OR RECORDING ANY SALES CONTRACT OF SUBDIVISION PLAN, ANY PURCHASER OR SUBDIVIDER OF ANY PORTION OF THIS PROPERTY SHOULD CONTACT APPROPRIATE OFFICIALS OF FRANKLIN TOWNSHIP AND/OR CENTER TOWNSHIP, WHO ARE CHARGED WITH ADMINISTERING THE ACT TO DETERMINE THE FORM OF SEWAGE FACILITIES PLANNING REQUIRED AND THE PROCEDURE AND REQUIREMENTS FOR OBTAINING APPROPRIATE PERMITS OR APPROVALS.

FRANKLIN TOWNSHIP

CENTER TOWNSHIP

BUTLER COUNTY PLANNING COMMISSION

SURVEYOR

COMMONWEALTH OF PENNSYLVANIA
REGISTERED
PROFESSIONAL
PAUL J. NEFF
LAND SURVEYOR
SU051242
PENNSYLVANIA

RECORDER

RECORDER OF DEEDS
BUTLER COUNTY, PA.

ENGINEER

REFERENCES

REF. #	DESCRIPTION
1	Land Surveyors, Inc.; *Plan of Subdivision;* March 6, 2001; Recorded: May 22, 2001 at PBV 242, Pg. 2.
2	Land Surveyors, Inc.; *Plan of Subdivision;* March 8, 2001; Recorded: May 8, 2001 at PBV 241, Pg. 28.
3	W. J. McGarvey, PE.: *Trimble Subdivision No. 3;* July 7, 1995; Recorded: July 28, 1995 at PBV 185, Pg. 18.
4	W. J. McGarvey, PE.: *Trimble Subdivision No. 1;* June 20, 1985; Recorded: July 17, 1985 at PBV 106, Pg. 22.
5	P.A.S.D.A; Contouring at 2 foot interval.

REVISIONS

REV.	REVISION DESCRIPTION	DATE	BY	CHKD	APPR
1	REVISED PER COMMENTS FROM CENTER TWP ENGINEER & PLANNING COMMISSION	06/11/18	BJE	PJN	PJN

PEDERSEN &PEDERSEN
Civil and Environmental Engineering/Surveying
441 Mars-Valencia Road, Suite 200
Valencia, PA. 16059
724-898-3300
FAX 724-625-1329

CLIENT: CLARENCE B. McCANDLESS REMAINDER TRUST
240 UNIONVILLE ROAD, BUTLER, PENNSYLVANIA 16001

PROJECT: CLARENCE B. McCANDLESS REMAINDER TRUST CONSOLIDATION & LOT LINE REVISION PLAN No. 1
BEING
MULTIPLE TAX PARCELS
LOCATED AT: INSTRUMENT No. 200605180011927
CENTER & FRANKLIN TOWNSHIPS, BUTLER COUNTY, PENNSYLVANIA

DRAWN	BJE
CHECKED	PJN
APPROVED	PJN
DATE	04/17/18
ISSUE DATE	06/11/18
REV. #	1
PROJECT #	18–007
SCALE	NONE
DWG #	SP–1
SHEET	2 OF 2

Instr:201810040020245 10/04/2018
Pages:1 F:$45.00 9:38AM
Michele Mustello T20180014622
Butler County Recorder FL

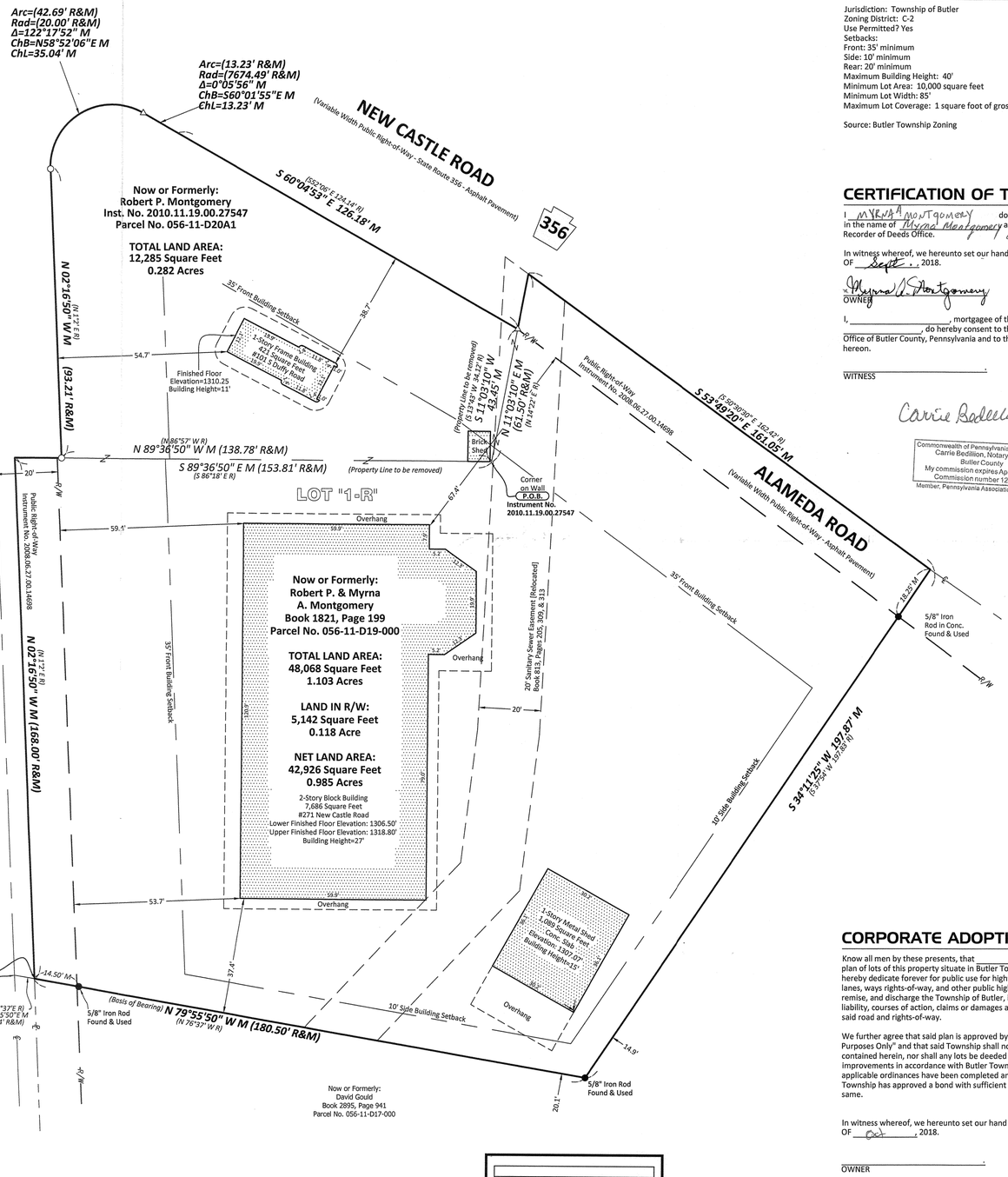

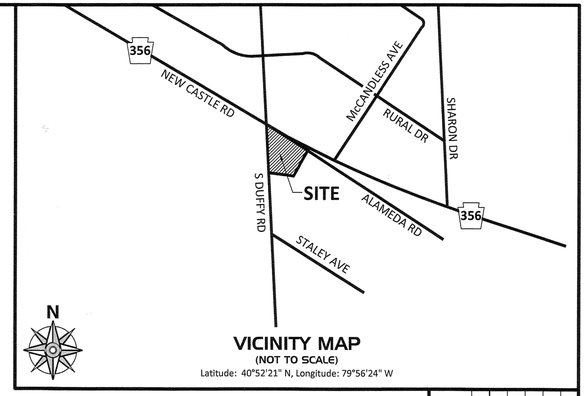

VICINITY MAP
(NOT TO SCALE)
Latitude: 40°52'21" N, Longitude: 79°56'24" W

ZONING

Jurisdiction: Township of Butler
Zoning District: C-2
Use Permitted? Yes
Setbacks:
Front: 35' minimum
Side: 10' minimum
Rear: 20' minimum
Maximum Building Height: 40'
Minimum Lot Area: 10,000 square feet
Minimum Lot Width: 85'
Maximum Lot Coverage: 1 square foot of gross floor area per 3 square feet of lot area

Source: Butler Township Zoning

CERTIFICATION OF TITLE

I Myrna A Montgomery do hereby certify that the title of this property is in the name of Myrna Montgomery as recorded in instrument no. 201011190027547 and Book 1821, Page 991 Recorder of Deeds Office.

In witness whereof, we hereunto set our hand and seal this 11 DAY OF Sept., 2018.

Myrna A. Montgomery
OWNER _____ OWNER

I, _____, mortgagee of the property embraced in this plan, _____, do hereby consent to the recording of said plan in the Recorders Office of Butler County, Pennsylvania and to the dedications and covenants appearing hereon.

_____ WITNESS _____ MORTGAGEE

Carrie Bedillion
Commonwealth of Pennsylvania - Notary Seal
Carrie Bedillion, Notary Public
Butler County
My commission expires April 9, 2022
Commission number 1282823
Member, Pennsylvania Association of Notaries

BASIS OF BEARING

The Basis of Bearing for this survey is Grid North of the Pennsylvania State Plane Coordinate System, South Zone (FIPS Zone 3702), on the North American Datum of 1983(2011). GPS Observations were used to establish a bearing of North 79°55'50" West for the south property line of the surveyed property.

REFERENCE DOCUMENTS

- Butler County Auditor's Office Geographic Information System and Tax Maps
- Westcor Land Title Insurance Company Commitment No. 18-01595-CDC, with an effective date of February 15, 2018.
- Instrument No. 2010.11.19.00.27547 & Deed Book 1821, Page 991
- "Robert Montgomery Combination – Three Lots Into One" recorded in Butler County Recorder of Deed's Office in Plan Book 146, Page 16 on May 24, 1991. (Partially Illegible)

ACKNOWLEDGEMENTS

COMMONWEALTH OF PENNSYLVANIA : SS
COUNTY OF BUTLER :

BEFORE ME, THE SUBSCRIBER, A NOTARY PUBLIC IN AND FOR SAID COMMONWEALTH AND COUNTY, PERSONALLY APPEARED ABOVE NAMED Myrna A. AND Montgomery ACKNOWLEDGED THE FOREGOING RELEASE AND DEDICATION AND PLAN TO BE OUR ACT AND DEED AND DESIRE THE SAME TO BE RECORDED AS SUCH.

SWORN AND SUBSCRIBED BEFORE ME THIS DAY.

WITNESS MY HAND AND SEAL THIS 1 DAY OF Oct 2018.
MY COMMISSION EXPIRES THE 2 DAY OF June 2020

NOTARY PUBLIC

Commonwealth of Pennsylvania - Notary Seal
ROBERT JOHN WHITE - Notary Public
Butler County
My Commission Expires Sep 12, 2022
Commission Number 1192974

Reviewed by County
APPROVED BY THE BUTLER ~~TOWNSHIP~~ PLANNING COMMISSION THIS 18th DAY OF July, 2018.

SECRETARY CHAIRMAN

BUTLER COUNTY PLANNING COMMISSION

THE BOARD OF COMMISSIONERS OF THE TOWNSHIP OF BUTLER HEREBY GIVES PUBLIC NOTICE THAT IN APPROVING THIS PLAN FOR RECORDING PURPOSES ONLY, THE TOWNSHIP OF BUTLER ASSUMES NO OBLIGATIONS, LEGAL OR OTHERWISE, EXPRESSED OR IMPLIED, EITHER TO ACCEPT SAID STREETS AS TOWNSHIP STREETS, OR ROADS, OR OTHER SUCH SERVICE ORDINARILY INSTALLED IN TOWNSHIP STREETS OR ROADS.

APPROVED BY THE BOARD OF COMMISSIONERS OF THE TOWNSHIP OF BUTLER THIS 20TH DAY OF August, 2018.

SECRETARY CHAIRMAN, BOARD OF SUPERVISORS

SUPERVISOR

I, ERIC S. JACKSON, A PROFESSIONAL LAND SURVEYOR OF THE COMMONWEALTH OF PENNSYLVANIA, DO HEREBY VERIFY, TO THE BEST OF MY KNOWLEDGE, INFORMATION AND BELIEF, THAT THIS PLAN CORRECTLY REPRESENTS THE LOTS, LANDS, STREETS, AND HIGHWAYS AS SURVEYED AND PLOTTED BY ME FOR THE OWNERS AND OR AGENTS.

8/23/18
ERIC S. JACKSON, PLS DATE
PROFESSIONAL LAND SURVEYOR NO. SU075529
EJACKSON@NORTHCOASTGEO.COM

COMMONWEALTH OF PENNSYLVANIA
REGISTERED PROFESSIONAL
ERIC S JACKSON
PENNSYLVANIA
8/23/18

Approved by Township
REVIEWED BY THE BUTLER ~~COUNTY~~ PLANNING COMMISSION THIS 7 DAY OF August, 2018.

SECRETARY CHAIRMAN

COMMONWEALTH OF PENNSYLVANIA : SS
COUNTY OF BUTLER :

RECORDED IN THE RECORDERS OFFICE FOR THE RECORDING OF DEEDS, PLANS, ETC. IN SAID COUNTY IN PLAN BOOK VOLUME 373 PAGE 49.

GIVEN UNDER MY HAND AND SEAL THIS 4th DAY OF October, 2018.

RECORDER

MICHELE M. MUSTELLO
RECORDER OF DEEDS
My Commission Expires First Monday in January 2020

RECORDER OF DEEDS BUTLER COUNTY, PA

CORPORATE ADOPTION

Know all men by these presents, that I, do hereby adopt this plan as its plan of lots of this property situate in Butler Township, Butler County, Pennsylvania, and hereby dedicate forever for public use for highway and utility purposes, all drives, roads, lanes, ways rights-of-way, and other public highway shown upon the pla, and we release, remise, and discharge the Township of Butler, its successors or assigns, of and from all liability, courses of action, claims or damages arising from or pertaining to in any manner said road and rights-of-way.

We further agree that said plan is approved by the township of Butler for "Planning Purposes Only" and that said Township shall not issue any "Building Permits" for lots contained herein, nor shall any lots be deeded until either all of said roads and improvements in accordance with Butler Township Ordinance _____ and all other applicable ordinances have been completed and accepted by said Township or until the Township has approved a bond with sufficient surety to guarantee construction of the same.

In witness whereof, we hereunto set our hand and seal this 1 DAY OF Oct, 2018.

_____ OWNER
~~OWNER~~ Myrna A. Montgomery

NOTES

OWNER:

Myrna A. Montgomery

264 Jones Road, Cabot, PA 16023

Book 1821, Page 991
Parcel No. 056-11-D19-000

Inst. No. 2010.11.19.00.27547
Parcel No. 056-11-D20A1

TOTAL LAND AREA:
60,353 Square Feet
1.385 Acres

LAND IN R/W:
5,142 Square Feet
0.118 Acre

NET LAND AREA:
55,211 Square Feet
1.267 Acres

DEVELOPER:
Cocca Development
100 Debartolo Place, Suite 400
Boardman, OH 44512
(330) 729-1010

Access to a state highway shall only be authorized by a highway occupancy permit issued by the Pennsylvania Department of Transportation under Section 420 of the State Highway Law (P.L. 1242, No. 428 of June 1, 1945).

LEGEND

R/W	- Right-of-Way
℄	- Adjoiner Property Line
℄	- Centerline
P.O.B.	- Point of Beginning
P.O.C.	- Point of Commencement
Rad	- Radius
Arc	- Arc Length
Δ	- Delta Angle
ChB	- Chord Bearing
ChL	- Chord Length
M	- Measured
(R)	- Record
	- Land Hook
●	- Monument Found
○	- 5/8" Iron Rod w/Cap "NCG PS SU075529" Set
△	- MAG Nail Set
	- Building Area

NORTH

GRAPHIC SCALE
0 20 40
1 INCH = 20 FT.

PLAN BOOK	PAGE
373	49

REVISION HISTORY

BY:	DATE:	COMMENT:
ESJ	2018-06-27	PRELIMINARY DRAFT
ESJ	2018-07-25	ADDRESS COMMENTS FROM GATEWAY ENG. INC.

LOT CONSOLIDATION SURVEY
PREPARED FOR:
MYRNA A. MONTGOMERY

271 New Castle Road
& 101 S Duffy Road
Township of Butler
County of Butler
Commonwealth of Pennsylvania

NORTH COAST GEOMATICS
Mapping & Surveying - northcoastgeo.com
173 Owosso Ave
Fairlawn, OH 44333
(614) 519-3611

Project No. NCG 1482
Drafted by: ESJ

SHEET 1 OF 1

Instr:201810040020016 10/04/2018
Pages:1 F:$45.00 3:18PM
Michele Mustello T20180014673
Butler County Recorder PL

OWNER'S ADOPTION

KNOW ALL MEN BY THESE PRESENTS THAT WE, THOMAS A. AND GINA M. BROWN, OF THE TOWNSHIP OF BUTLER, COUNTY OF BUTLER AND COMMONWEALTH OF PENNSYLVANIA, FOR OURSELVES, OUR HEIRS, EXECUTORS, ADMINISTRATORS AND ASSIGNS, DO HEREBY ADOPT THIS PLAN AS OUR PLAN OF OUR PROPERTIES, SITUATE IN THE TOWNSHIP OF BUTLER, COUNTY OF BUTLER AND COMMONWEALTH OF PENNSYLVANIA, AND DO HEREBY DEDICATE FOREVER FOR PUBLIC USE FOR HIGHWAY AND UTILITY PURPOSES, ALL DRIVES, ROADS, LANES, WAYS, RIGHTS-OF-WAY, AND OTHER PUBLIC HIGHWAYS SHOWN UPON THE PLAN, AND I RELEASE, REMISE AND DISCHARGE THE TOWNSHIP OF BUTLER, ITS SUCCESSORS OR ASSIGNS, OF AND FROM ALL LIABILITY, COURSES OF ACTION, CLAIMS OR DAMAGES ARISING FROM OR PERTAINING TO IN ANY MANNER SAID ROADS AND RIGHTS-OF-WAY.

WE FURTHER AGREE THAT SAID PLAN IS APPROVED BY THE TOWNSHIP OF BUTLER FOR "PLANNING PURPOSES ONLY" AND THAT SAID TOWNSHIP SHALL NOT ISSUE ANY "BUILDING PERMITS" FOR LOTS CONTAINED HEREIN, NOR SHALL ANY LOTS BE DEEDED UNTIL EITHER ALL OF SAID ROADS AND IMPROVEMENTS IN ACCORDANCE WITH BUTLER TOWNSHIP ORDINANCE _____ AND ALL OTHER APPLICABLE ORDINANCES HAVE BEEN COMPLETED AND ACCEPTED BY SAID TOWNSHIP OR UNTIL THE TOWNSHIP HAS APPROVED A BOND WITH SUFFICIENT SURETY TO GUARANTEE CONSTRUCTION OF THE SAME.

IN WITNESS WHEREOF,WE HEREUNTO SET OUR HAND AND SEAL THIS 25 DAY OF SEPTEMBER, 2018.

x Thomas A Brown x Gina M Brown
THOMAS A. BROWN GINA M. BROWN

ACKNOWLEDGMENT OF NOTARY PUBLIC

BEFORE ME, THE SUBSCRIBER, A NOTARY PUBLIC IN AND FOR THE COMMONWEALTH OF PENNSYLVANIA AND COUNTY OF BUTLER, PERSONALLY APPEARED THE ABOVE NAMED, THOMAS A. AND GINA M. BROWN, AND ACKNOWLEDGED THE FOREGOING RELEASE AND DEDICATION OF PLAN TO BE THEIR ACT AND DEED AND DESIRED THE SAME TO BE RECORDED AS SUCH.

SWORN TO AND SUBSCRIBED BEFORE ME THIS 25 DAY OF SEPT, 2018.

MY COMMISSION EXPIRES THE 17 DAY OF FEBRUARY 2019

x Debra L Jeffcoat
NOTARY PUBLIC

COMMONWEALTH OF PENNSYLVANIA
Notarial Seal
Debra L. Jeffcoat, Notary Public
Jefferson Township, Butler County
My Commission Expires February 17, 2019

CERTIFICATION OF TITLE (NO MORTGAGE)

WE, THOMAS A. AND GINA M. BROWN, OWNERS OF THE T. BROWN PLAN, DO HEREBY CERTIFY THAT THE TITLE TO THE PROPERTY CONTAINED IN THE T. BROWN IS IN THE NAME OF THOMAS A. AND GINA M. BROWN AND IS RECORDED IN INSTRUMENT NUMBER 201710160022431, BUTLER COUNTY RECORDER OF DEEDS OFFICE. WE FURTHER CERTIFY THAT THERE IS NO MORTGAGE, LIEN OR ENCUMBRANCE AGAINST THESE PROPERTIES.

x Debra L Jeffcoat x Thomas A Brown x Gina M Brown
WITNESS THOMAS A. BROWN GINA M. BROWN

SURVEYOR'S CERTIFICATION

I, STANLEY D. GRAFF, A REGISTERED SURVEYOR OF THE COMMONWEALTH OF PENNSYLVANIA, DO HEREBY CERTIFY, TO THE BEST OF MY KNOWLEDGE, THAT THE PLAN AS SHOWN HEREON IS BASED UPON ACTUAL FIELD SURVEY OF THE LAND DESCRIBED AND THAT ALL ANGLES, DISTANCES AND COURSES ARE CORRECTLY SHOWN, THAT THE MONUMENTS AND MARKERS HAVE BEEN SET AS SHOWN ON THE PLAN, AND THAT THIS PLAN CORRECTLY REPRESENTS THE LOTS, LANDS, STREETS AND HIGHWAYS AS SURVEYED AND PLOTTED BY ME FOR THE OWNERS OR AGENTS.

11 SEPT '18 x SDG
DATE STANLEY D. GRAFF
REG. NO. SU-060514-E

BUTLER TOWNSHIP - MUNICIPAL DECLARATIONS

THE BOARD OF COMMISSIONERS OF THE TOWNSHIP OF BUTLER HEREBY GIVES PUBLIC NOTICE THAT IN APPROVING THIS PLAN FOR RECORDING PURPOSES ONLY, THE TOWNSHIP OF BUTLER ASSUMES NO OBLIGATIONS, LEGAL OR OTHERWISE, EXPRESSED OR IMPLIED, EITHER TO ACCEPT SAID STREETS AS TOWNSHIP STREETS OR ROADS OR GRADE, PAVE AND CURB THE STREETS IN SAID PLAN, OR TO CONSTRUCT SEWERS THEREIN OR TO INSTALL ANY OTHER SUCH SERVICE ORDINARILY INSTALLED IN TOWNSHIP STREETS OR ROADS.

x Theresa Giesler x
SECRETARY PRESIDENT, BOARD OF COMMISSIONERS SEAL

MUNICIPAL REVIEW AND APPROVAL STATEMENTS

APPROVED BY THE BOARD OF SUPERVISORS OF THE TOWNSHIP OF BUTLER THIS 17TH DAY OF September, 2018.

x Theresa Giesler x
SECRETARY PRESIDENT, BOARD OF COMMISSIONERS SEAL

APPROVED BY THE BUTLER TOWNSHIP PLANNING COMMISSION THIS 4TH DAY OF September, 2018.

x Ernest R Oesterling x
SECRETARY CHAIRPERSON, PLANNING COMMISSION SEAL

BUTLER COUNTY REVIEW AND APPROVALS

REVIEWED BY THE BUTLER COUNTY PLANNING COMMISSION ON THIS 8TH DAY OF AUG, 2018.

x x
SECRETARY CHAIRPERSON, BUTLER COUNTY PLANNING COMMISSION SEAL

PROOF OF RECORDING

RECORDED IN THE OFFICE OF THE RECORDER OF DEEDS OF THE COUNTY OF BUTLER, COMMONWEALTH OF PENNSYLVANIA, IN PLAN BOOK VOLUME 373 PAGE 50

GIVEN UNDER MY HAND AND SEAL THIS 4 DAY OF October, 2018.

x Michele M Mustello
RECORDER OF DEEDS

MICHELE M. MUSTELLO
RECORDER OF DEEDS
My Commission Expires First Monday in January 2020

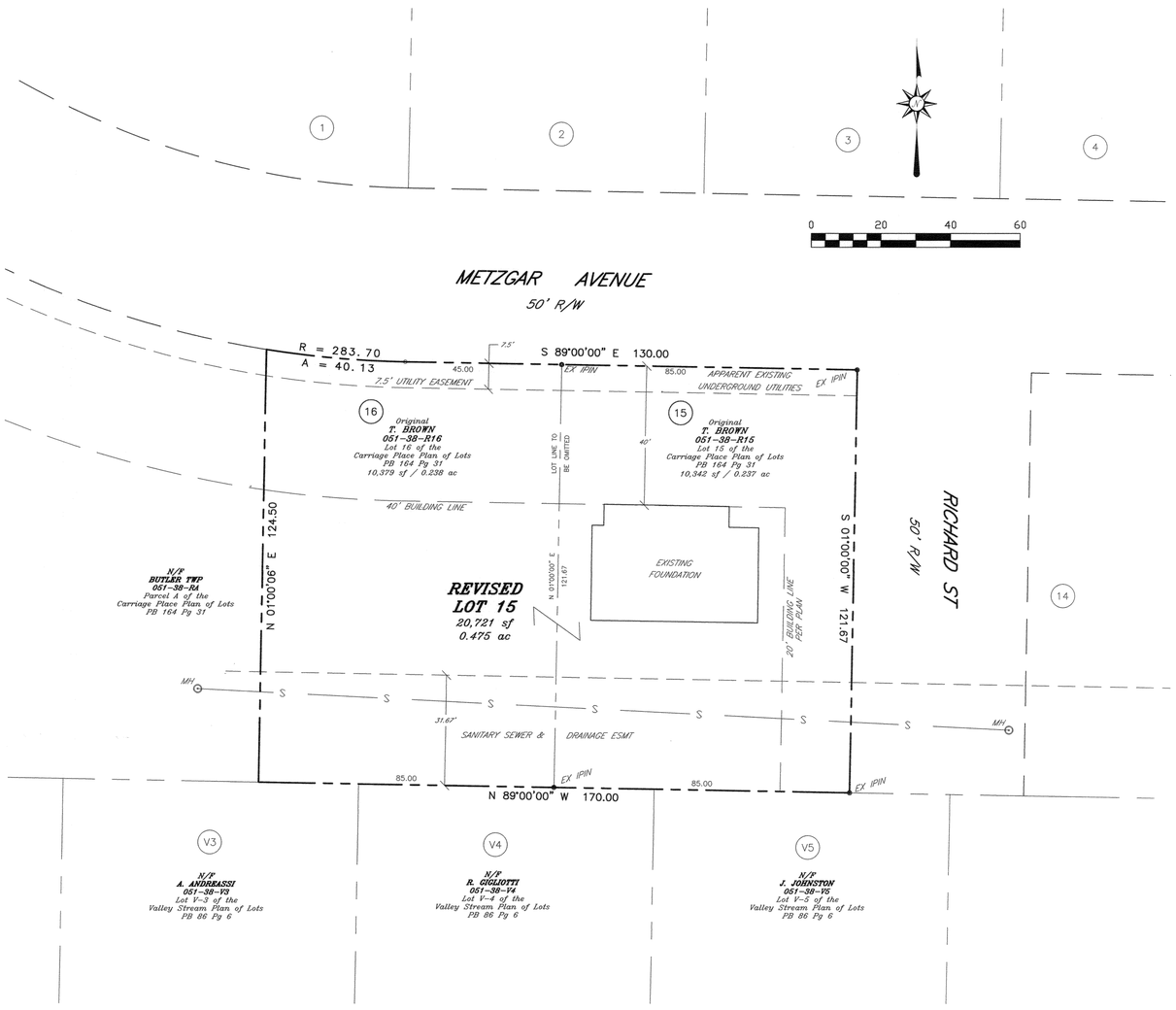

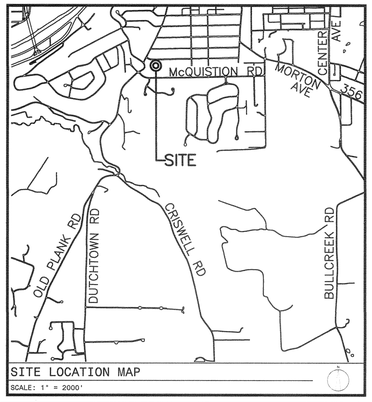

SITE LOCATION MAP
SCALE: 1" = 2000'

BUTLER TOWNSHIP R-1 DISTRICT	
Dimension	Single Family with Public Water and Sewer
Min. Lot Area	15,000 sq ft
Min. Lot Width	100 feet
Min. Front Yard Depth	40 feet
Min. Side Yard Depth	10 feet
Min. Rear Yard Depth	25 feet

NOTE: SUBJECT TO AND TOGETHER WITH ANY AND ALL EXISTING RIGHTS-OF-WAY, EASEMENTS AND CONDITIONAL CLAUSES OF RECORD OR ESTABLISHED BY DUE PROCESS.

HIGHWAY OCCUPANCY PERMIT

A HIGHWAY OCCUPANCY PERMIT IS REQUIRED PURSUANT TO SECTION 420 OF THE STATE HIGHWAY LAW (P.L. 1242, No. 428).

GENERAL NOTES:
1. OWNERS: THOMAS A. & GINA M. BROWN
2. TAX ID: 051-38-R15 AND R16
3. ADDRESS: 123 W METZGAR AVE BUTLER, PA 16001
4. ZONING: R-1 SINGLE FAMILY DISTRICT
5. SETBACKS: SEE TABLE

REV.	DESCRIPTION	BY	DATE	REFERENCE DRAWINGS
A	REVISIONS PER TOWNSHIP ENGINEER REVIEW LETTER DATED 8/21/18	SDG	8/24/18	Carriage Place Plan of Lots PB 164/31
				Valley Stream Plan of Lots PB 86/6

0 20 40
SCALE: 1" = 20'

DRAWN BY: SDG
DATE: 08/02/18
CHECKED BY: Sdg
DATE:
APPROVED:

DESIGNER
GRAFF SURVEYING
GRAFF SURVEYING LLC
PO BOX 521 | SAXONBURG, PA 16056
P: 724-352-3811 F: 724-352-1059
INFO@GRAFFSURVEYING.COM
WWW.GRAFFSURVEYING.COM

PROJECT
T. BROWN PLAN :
BEING A CONSOLIDATION OF BUTLER COUNTY TAX PARCELS 051-38-R15 AND 051-38-R16

BUTLER TOWNSHIP
BUTLER COUNTY, PENNSYLVANIA

DWG.No. 18-189

RECORDED _____ 20____
PLAN BOOK 373 PAGE 50
SHEET _____ of _____

COMMONWEALTH OF PENNSYLVANIA REGISTERED PROFESSIONAL STANLEY D. GRAFF LAND SURVEYOR NO. 30161-E
REGISTERED SURVEYOR

RECORDER OF DEEDS BUTLER COUNTY, PA
BUTLER COUNTY RECORDER OF DEEDS

BUTLER TOWNSHIP BOARD OF COMMISSIONERS

BUTLER TOWNSHIP PLANNING COMMISSION

BUTLER COUNTY PLANNING COMMISSION