KNOW ALL MEN BY THESE PRESENTS; THAT PAULA J SCHALL AND CHRISTINE M BYRD, DOES HEREBY ADOPT THIS PLAN AS ITS PLAN OF LOTS OF ITS PROPERTY SITUATE IN MARION TOWNSHIP, BUTLER COUNTY, PENNSYLVANIA, AND FOR DIVERS ADVANTAGES ACCRUING TO IT, DOES HEREBY DEDICATE FOREVER, FOR PUBLIC USE FOR HIGHWAY PURPOSES ALL SLOPE AREAS AND ALL DRIVES, ROADS, STREETS, LANES, WAYS AND OTHER PUBLIC HIGHWAYS SHOWN UPON THE PLAN, WITH THE SAME FORCE AND EFFECT AS IF THE SAME HAD BEEN THROUGH LEGAL PROCEEDINGS, AND IN CONSIDERATION OF THE APPROVAL OF SAID PLAN, AND ANY FUTURE ACCEPTANCE OF SAID PUBLIC HIGHWAYS BY THE COMMONWEALTH OF PENNSYLVANIA, COUNTY OF BUTLER, AND TOWNSHIP OF MARION, PAULA J SCHALL AND CHRISTINE M BYRD, HEREBY COVENANTS AND AGREES TO AND BY THESE PRESENTS DOES RELEASE AND FOREVER DISCHARGE SAID COMMONWEALTH OF PENNSYLVANIA, COUNTY OF BUTLER, AND TOWNSHIP OF MARION, THEIR SUCCESSORS OR ASSIGNS FROM ANY LIABILITY FOR DAMAGES ARISING AND TO ARISE FROM THE APPROPRIATION OF SAID GROUND FOR PUBLIC HIGHWAYS AND THE PHYSICAL GRADING THEREOF TO ANY GRADES THAT MAY BE ESTABLISHED. THIS DEDICATION AND RELEASE SHALL BE BINDING UPON PAULA J SCHALL AND CHRISTINE M BYRD MY SUCCESSORS AND ASSIGNS AND PURCHASERS OF LOTS IN THIS PLAN.

IN WITNESS WHEREOF, WE, HEREUNTO SET OUR HAND AND SEAL THIS 5TH DAY OF July 2017.

ATTEST:

Gusta Rowe — WITNESS
Christine M. Byrd — EXECUTOR
Gusta Rowe — WITNESS
Paula J. Schall — EXECUTOR
ESTATE OF MARIAN RIHEL

COMMONWEALTH OF PENNSYLVANIA) SS:
COUNTY OF ~~BUTLER~~ MERCER)

BEFORE ME, THE SUBSCRIBER, A NOTARY PUBLIC IN AND FOR SAID COMMONWEALTH AND COUNTY, PERSONALLY APPEARED ABOVED NAMED PAULA J SCHALL AND CHRISTINE M BYRD AND ACKNOWLEDGED THE FOREGOING RELEASE AND DEDICATION AND PLAN TO BE OUR ACT AND DEED AND DESIRE THE SAME TO BE RECORDED AS SUCH.

SWORN AND SUBSCRIBED BEFORE ME THIS DAY.

WITNESS MY HAND AND SEAL THIS 5TH DAY OF July 2017.
MY COMMISSION EXPIRES THE 12 DAY OF MAY 2020.

Bobbie Jo McIlwain
NOTARY PUBLIC

COMMONWEALTH OF PENNSYLVANIA
NOTARIAL SEAL
Bobbie Jo McIlwain, Notary Public
Pine Twp., Mercer County
My Commission Expires May 12, 2020

THE BOARD OF SUPERVISORS OF THE TOWNSHIP OF MARION HEREBY GIVES PUBLIC NOTICE THAT IN APPROVING THIS PLAN FOR RECORDING PURPOSES ONLY, THE TOWNSHIP OF MARION ASSUMES NO OBLIGATIONS, LEGAL OR OTHERWISE, EXPRESSED OR IMPLIED, EITHER TO ACCEPT SAID STREETS AS TOWNSHIP STREETS, OR ROADS, OR GRADES, PAVE AND CURB THE STREETS IN SAID PLAN, OR TO CONSTRUCT SEWERS THEREIN OR TO INSTALL ANY OTHER SUCH SERVICE ORDINARILY INSTALLED IN TOWNSHIP STREETS OR ROADS.

APPROVED BY THE BOARD OF SUPERVISORS OF THE TOWNSHIP OF MARION, THIS 14 DAY OF August, 2017.

Judith A Stoops — SECRETARY
Jason R. McBride — CHAIRMAN, BOARD OF SUPERVISORS
Daniel K Patton — SUPERVISOR

I, JEFFREY A. SHUTY, A PROFESSIONAL LAND SURVEYOR OF THE COMMONWEALTH OF PENNSYLVANIA, DO HEREBY CERTIFY, TO THE BEST OF MY KNOWLEDGE, INFORMATION AND BELIEF, THAT THIS PLAN CORRECTLY REPRESENTS THE LOTS, LANDS, STREETS, AND HIGHWAYS AS SURVEYED AND PLOTTED BY ME FOR THE OWNERS AND OR AGENTS.

6/28/17 — DATE
REG. NO. SU075509

REVIEWED BY THE BUTLER COUNTY PLANNING COMMISSION THIS 26TH DAY OF JUNE 2017.

Chuck Davies — SECRETARY
Frank E. Uhl — CHAIRMAN

BUTLER COUNTY PLANNING COMMISSION

COMMONWEALTH OF PENNSYLVANIA) SS:
COUNTY OF BUTLER)

RECORDED IN THE RECORDERS OFFICE FOR THE RECORDING OF DEEDS, PLANS, ETC. IN SAID COUNTY IN PLAN BOOK VOLUME 365 PAGE 1.

GIVEN UNDER MY HAND AND SEAL THIS 15 DAY OF AUGUST 2017.

Michele M. Mustello — RECORDER

MICHELE M. MUSTELLO
RECORDER OF DEEDS
My Commission Expires First Monday in January 2022

RECORDER OF DEEDS BUTLER COUNTY, PA

NOTE:
The municipality can issue final approval of the subdivision plan or building permit if the plan or permit contains the wording that "A HIGHWAY OCCUPANCY PERMIT IS REQUIRED PERSUANT TO SECTION 420 OF THE STATE HIGHWAY LAW (PL 1242, No. 428)"

COUNTY OF BUTLER
DEPARTMENT NUMBER
17164

PLAN BOOK	PAGE
365	1

NON-BUILDING WAIVER
LOT 2

"As of the date of this deed/plot plan recording, the property/subdivision described herein is and shall be dedicated for the express purpose of AGRICULTURAL use. No portion of The RESIDUAL TRACT of this property/subdivision has been approved by MARION TWP. (Municipality) or the Department of Environmental Protection (DEP) for the installation of sewage disposal facilities. No sewage permit will be issued for the installation, construction, connection to or use of any sewage collection, conveyance, treatment or disposal system (except for repairs to existing systems) unless the municipality and DEP have both approved sewage facilities planning for the property/subdivision described herein in accordance with the Pennsylvania Sewage Facilities Act (35 P.S. Sections 750.1 et seq.) and regulations promulgated thereunder. Prior to signing, executing, implementing or recording any sales contract or subdivision plan, any purchaser or subdivider of any portion of this property should contact appropriate officials of MARION TWP. (municipality), which is charged with administering the Sewage Facilities Act to determine what sewage facilities planning is required and the procedure and requirements for obtaining appropriate permits or approvals."

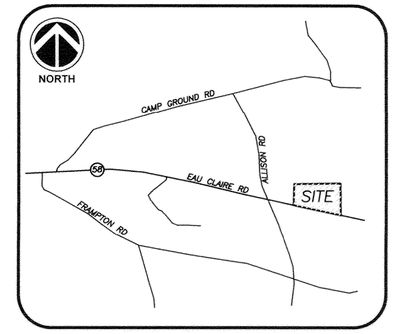

VICINITY MAP
NOT TO SCALE

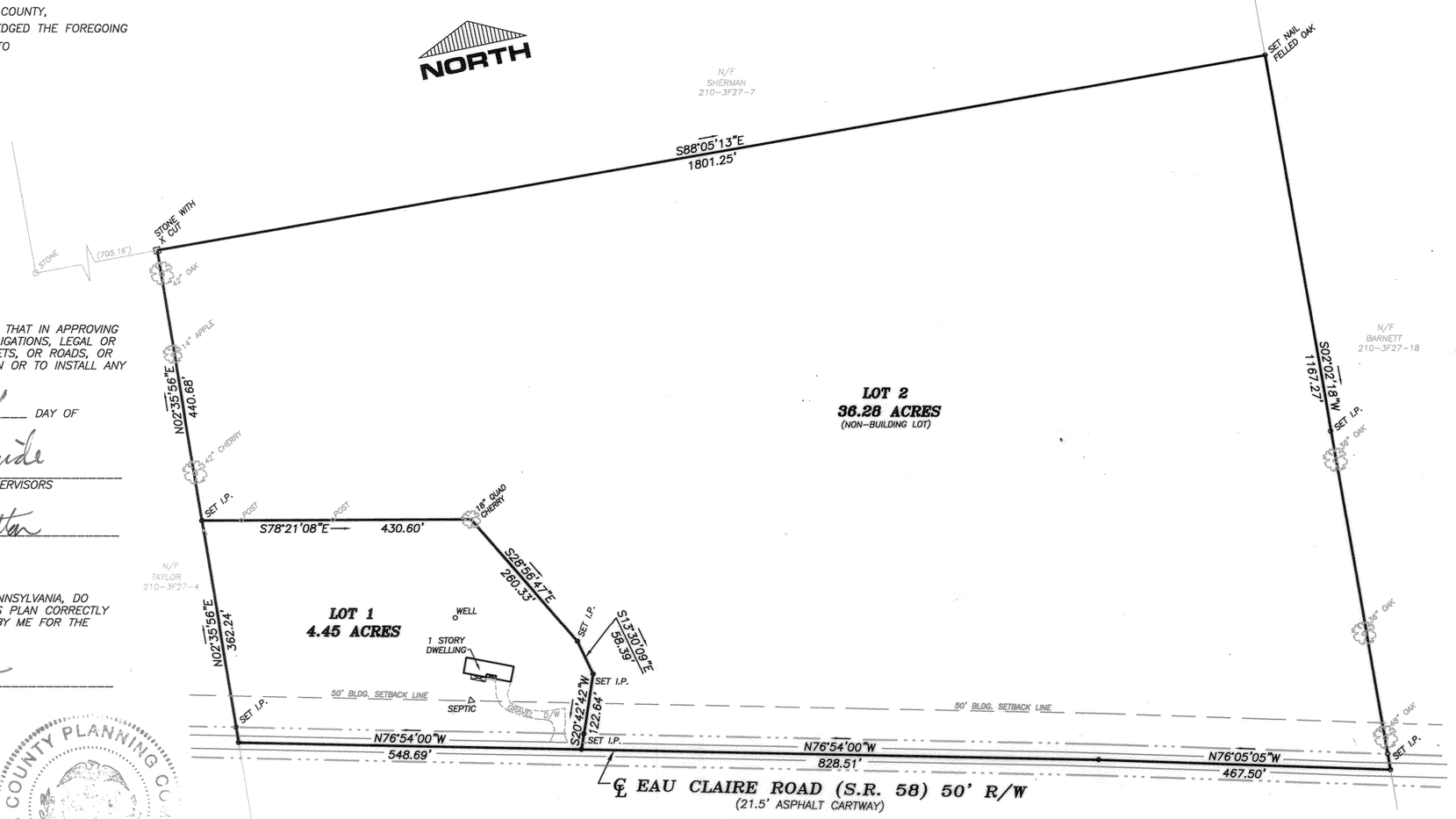

GRAPHIC SCALE
150 0 75 150 300 600
(IN FEET)
1 inch = 150 ft.

Instr:201708150017216 08/15/2017
Pages:1 F:$45.00 11:16AM
Michele Mustello T20170012326
Butler County Recorder FL

OWNER:
MARIAN RIHEL
1169 EAU CLAIRE RD
HARRISVILLE, PA 16038

TOTAL PLAN AREA	40.73 ACRES
LOT 1	4.45 ACRES
LOT 2	36.28 ACRES

TAX PARCEL #210-3F27-7A
DEED REF: 1242 PG. 323

COMMONWEALTH OF PENNSYLVANIA REGISTERED PROFESSIONAL JEFFREY A. SHUTY LAND SURVEYOR No. SU075509

NORTHERN
SURVEYORS AND ASSOCIATES
137 LINK LANE
SLIPPERY ROCK, PA 16057
(724)530-6889

Scale 1" = 150'
Date JUNE 21, 2017
Job No. 2939

RIHEL SUBDIVISION

Situate in Marion Township
Butler County, Pa.

Prepared For
ESTATE OF MARIAN RIHEL

Sheet No. 1 of 1

ALL SIGNATURES MUST BE IN BLACK PERMANENT MARKER

OWNER'S ADOPTION:

THE GIGLIOTTI HOLDINGS, L.P., OWNER OF THE LAND SHOWN ON THE WEATHERBURN HEIGHTS PRD PHASE 2, REVISION No. 2 PLAN OF LOTS HEREBY ADOPTS THIS PLAN AS ITS PLAN OF LOTS AND IRREVOCABLY DEDICATES ALL STREETS AND OTHER PROPERTY IDENTIFIED FOR DEDICATION ON THE PLAN TO THE PUBLIC. ANY FUTURE ACCEPTANCE OF SAID PUBLIC STREETS OR PROPERTY BY THE COMMONWEALTH OF PENNSYLVANIA, COUNTY OF BUTLER, AND TOWNSHIP OF MIDDLESEX WE HEREBY COVENANT AND AGREE TO AND BY THESE PRESENTS DO RELEASE AND FOREVER DISCHARGE SAID COMMONWEALTH OF PENNSYLVANIA, COUNTY OF BUTLER, AND TOWNSHIP OF MIDDLESEX, THEIR SUCCESSORS OR ASSIGNS FROM ANY LIABILITY FOR DAMAGES ARISING AND TO ARISE FROM ANY APPROPRIATION OF SAID GROUND FOR PUBLIC STREETS OR PROPERTY AND THE PHYSICAL GRADING THEREOF TO ANY GRADES THAT MAY BE ESTABLISHED. THIS ADOPTION AND DEDICATION SHALL BE BINDING UPON THE PARTNERSHIP AND UPON ITS HEIRS, EXECUTORS, AND ASSIGNS.

Dominic Gigliotti
(GENERAL PARTNER)

ACKNOWLEDGEMENT OF NOTARY PUBLIC:

BEFORE ME, THE UNDERSIGNED NOTARY PUBLIC IN AND FOR THE COMMONWEALTH OF PENNSYLVANIA AND COUNTY OF BUTLER, PERSONALLY APPEARED THE ABOVE NAMED Dominic Gigliotti, AND ACKNOWLEDGED THE FOREGOING ADOPTION, DEDICATION AND PLAN TO BE HIS ACT AND DESIRED THE SAME TO BE RECORDED AS SUCH.

WITNESS MY HAND AND SEAL THIS 28th DAY OF June, 2017.

MY COMMISSION EXPIRES THE 15th DAY OF December, 2018

Timothy A. Piper
(NOTARY PUBLIC)

COMMONWEALTH OF PENNSYLVANIA
NOTARIAL SEAL
Timothy A. Piper, Notary Public
Pine Twp., Allegheny County
My Commission Expires Dec. 15, 2018
MEMBER, PENNSYLVANIA ASSOCIATION OF NOTARIES

CERTIFICATION OF TITLE WITH MORTGAGE:

I/WE HEREBY CERTIFY THAT THE TITLE TO THE PROPERTY CONTAINED IN THE WEATHERBURN HEIGHTS PRD PHASE 2, REVISION No. 2 PLAN OF LOTS IS IN THE NAME OF GIGLIOTTI HOLDINGS, L.P. AND IS RECORDED IN INSTR. NUMBER 200810010022292.

SIGNATURE OF WITNESS

Dominic Gigliotti
SIGNATURE OF OWNER

DOLLAR BANK MORTGAGEE OF THE PROPERTY CONTAINED IN THE WEATHERBURN HEIGHTS PRD PHASE 2, REVISION No. 2 PLAN OF LOTS CONSENTS TO THE RECORDING OF SAID PLAN AND TO THE DEDICATIONS AND ALL OTHER MATTERS APPEARING ON THE PLAN.

SIGNATURE OF WITNESS

Wendy M. Mantle V.P.
NAME, TITLE, AND MORTGAGEE

SURVEYOR'S CERTIFICATION:

I CERTIFY THAT, TO THE BEST OF MY KNOWLEDGE, THE SURVEY AND PLAN SHOWN HEREON CORRECTLY REPRESENTS THE LOTS, LANDS, STREETS AND HIGHWAYS AS SURVEYED AND PLOTTED BY ME.

07/07/2017
(DATE)

(NAME OF SURVEYOR)
REGISTRATION NUMBER SU-075022

MUNICIPAL DECLARATIONS:

THE BOARD OF SUPERVISORS OF THE TOWNSHIP OF MIDDLESEX, HEREBY GIVES NOTICE THAT IN APPROVING THIS PLAN FOR RECORDING, THE TOWNSHIP OF MIDDLESEX HAS NOT ACCEPTED DEDICATION OF ANY STREETS, LAND OR PUBLIC FACILITIES AND HAS NO OBLIGATION TO IMPROVE OR MAINTAIN SUCH STREETS, LAND OR FACILITIES.

(SECRETARY) (CHAIRMAN, BOARD OF SUPERVISORS)

REQUIRED MUNICIPAL REVIEW AND APPROVAL STATEMENTS:

APPROVED BY THE BOARD OF SUPERVISORS OF THE TOWNSHIP OF MIDDLESEX BY RESOLUTION No. 14 of 2017 EFFECTIVE THIS 21st DAY OF June, 2017.

(SECRETARY) (CHAIRMAN, BOARD OF SUPERVISORS)

SIGNED AND NOTED AS APPROVED THIS 21st DAY OF June, 2017.

(SECRETARY) (CHAIRMAN, BOARD OF SUPERVISORS)

REVIEWED BY THE PLANNING COMMISSION OF THE TOWNSHIP OF MIDDLESEX, THIS 18th DAY OF May, 2017

(SECRETARY) (CHAIRMAN, PLANNING COMMISSION)

I, Jeffrey A. Mikesic, A REGISTERED PROFESSIONAL ENGINEER, THE TOWNSHIP ENGINEER OF THE TOWNSHIP OF MIDDLESEX, DO HEREBY CERTIFY THAT THIS SUBDIVISION PLAN MEETS ALL THE ENGINEERING AND DESIGN REQUIREMENTS OF THE TOWNSHIP SUBDIVISION AND ZONING ORDINANCE EXCEPT AS DEPARTURES HAVE BEEN AUTHORIZED BY THE APPROVAL AUTHORITY.

7/11/2017 (DATE) PE083712 (REGISTRATION No.) (SIGNATURE)

REQUIRED COUNTY PLANNING COMMISSION REVIEW STATEMENT:

REVIEWED BY THE BUTLER COUNTY PLANNING COMMISSION ON THIS 10th DAY OF May, 17.

(SECRETARY) (CHAIRMAN, BUTLER COUNTY PLANNING COMMISSION)

PROOF OF RECORDING:

RECORDED IN THE OFFICE OF THE RECORDER OF DEEDS OF THE COUNTY OF BUTLER, COMMONWEALTH OF PENNSYLVANIA, IN PLAN BOOK VOLUME 365, PAGES 2-4.

GIVEN UNDER MY HAND AND SEAL THIS 15 DAY OF August, 2017.

(RECORDER OF DEEDS)

MICHELE M. MUSTELLO
RECORDER OF DEEDS
My Commission Expires First Monday in January 2020

Instr 201708150017217 08/15/2017
Pages 3 F $125.00 11:20AM
Michele Mustello T20170012327
Butler County Recorder FL

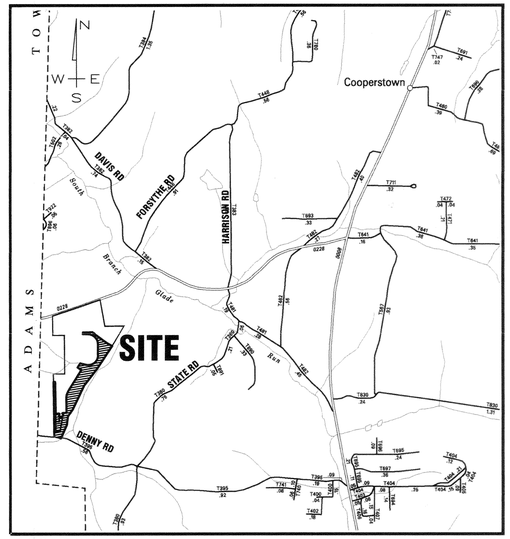

LOCATION MAP **SCALE: 1" = 2000'**

OWNER:
GIGLIOTTI HOLDINGS, L.P.
11279 PERRY HIGHWAY. SUITE 509
WEXFORD, PA 15220-3434

REV. NO.	DATE	DESCRIPTION	BY
1	5-17-17	SITE DATA TABLE	DUB
2	6-02-17	REMOVED PROPOSED SAN ESMT.	DUB
3	6-20-17	POND ACCESS ESMT. ON LOTS 260 & 261	DUB

DWG: 24702-PH2-SUBDIV-REV-2
DRAWN BY: MAM
CHECKED BY: DPT

GIGLIOTTI HOLDINGS, L.P.
MIDDLESEX TOWNSHIP - BUTLER COUNTY - PA

SCALE: AS NOTED

R-AG ZONING DISTRICT – RESIDENTIAL AGRICULTURE STANDARDS FOR PLANNED RESIDENTIAL DEVELOPMENTS	PRD TENTATIVE APPROVAL	PHASE II, REV. No. 2 WITH TWO ADDITIONAL LOTS
ZONING DISTRICT / MAXIMUM DENSITY		
R-AG / 4 UNITS PER ACRE	1.835/AC. 296 UNITS/161.269 = 1.835 UNITS/AC.)	1.848/AC. (298 UNITS/161.269 = 1.848 UNITS/AC.)
PERMITTED USE – SINGLE-FAMILY/ TWO FAMILY DWELLINGS/MULTI-FAMILY DWELLINGS		
MIN. SINGLE-FAMILY LOT SIZE	7,500 Sq. Ft. (0.172 AC.)	23,069.12 Sq.Ft. (0.529 AC.)
MIN. LOT WIDTH	75 FT.	75 FT.
MIN. FRONT YARD	20 FT.	20 FT.
MIN. SIDE YARD	10 FT.	10 FT.
MIN. REAR YARD	10 FT.	10 FT.
PERIMETER SETBACK	50 FT.	50 FT.
BUFFER YARD	10 FT.	10 FT.
MIN. COMMON OPEN SPACE 40%	43.64% (70.373 AC. PROVIDED) (70.373/161.269 = 43.64%)	42.59% (68.691 AC. PROVIDED) (68.691/161.269 = 42.59%)

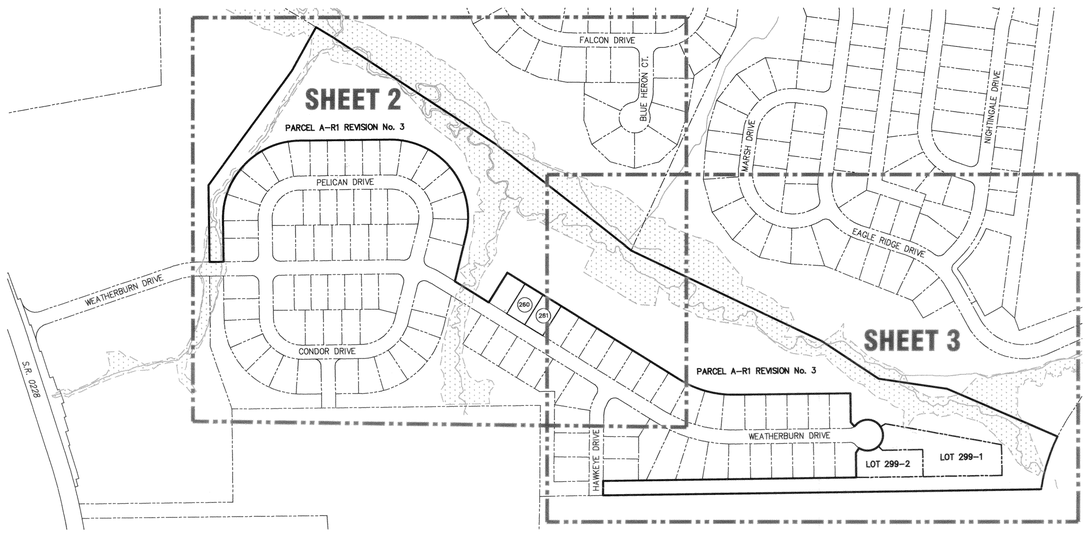

INDEX MAP
SCALE: 1"=250'

PLAN BOOK	PAGE
365	2

THIS PLAN IS A SUBDIVISION TO PARCEL A-R1, REVISION No. 2 RECORDED IN THE WEATHERBURN HEIGHTS PRD PHASE 2, REVISION No. 1 – LOT LINE REVISION TO PARCELS B-2 & B-3 PLAN, RECORDED IN PLAN BOOK VOLUME 346, PAGES 29 THRU 32.

THIS PLAN WILL ALSO RECORD A STORM SEWER ACCESS EASEMENT ON LOTS 260 AND 261. NO OTHER REVISIONS HAVE BEEN MADE TO LOTS 260 AND 261 RECORDED IN THE WEATHERBURN HEIGHTS PRD PHASE 2 PLAN OF LOTS, RECORDED IN PLAN BOOK VOLUME 345, PAGES 1 THRU 8.

Registered Surveyor
COMMONWEALTH OF PENNSYLVANIA — REGISTERED PROFESSIONAL — DONALD P. TRANT — LAND SURVEYOR SU-075022

Township of Middlesex Planning Commission

Township of Middlesex Board of Supervisors

Township of Middlesex Engineer
COMMONWEALTH OF PENNSYLVANIA — REGISTERED PROFESSIONAL — JEFFREY A. MIKESIC — ENGINEER PE083712

Butler County, Pa. Planning Commission
BUTLER COUNTY PLANNING COMMISSION

Butler County, Pa. Recorder of Deeds
RECORDER OF DEEDS — BUTLER COUNTY, PA.

TRANT CORPORATION
Environmental
Surveying
Site Civil
Traffic
Engineering Permits & Approvals
PINE CENTER
11279 PERRY HIGHWAY SUITE 206
WEXFORD, PA 15090
PHONE: (724) 935-7900
FAX: (724) 935-6060
EMAIL: permits@trantcorp.com

WEATHERBURN HEIGHTS PRD
PHASE 2, REVISION No. 2
PLAN OF LOTS

DATE: 05-09-2017
PROJ. NO.: 24702.55

SHEET 1 OF 3

Plot Date:6/27/2017 7:19 AM File Name:M:\24000 PROJECTS\24702\DWG\15-PH2\24702-PH2-SUBDIVISION-REV-2.DWG Layout:1

THIS PLAN IS A SUBDIVISION TO PARCEL A–R1, REVISION No. 2 RECORDED IN THE WEATHERBURN HEIGHTS PRD PHASE 2, REVISION No. 1 – LOT LINE REVISION TO PARCELS B–2 & B–3 PLAN, RECORDED IN PLAN BOOK VOLUME 346, PAGES 29 THRU 32.

THIS PLAN WILL ALSO RECORD A STORM SEWER ACCESS EASEMENT ON LOTS 260 AND 261. NO OTHER REVISIONS HAVE BEEN MADE TO LOTS 260 AND 261 RECORDED IN THE WEATHERBURN HEIGHTS PRD PHASE 2 PLAN OF LOTS, RECORDED IN PLAN BOOK VOLUME 345, PAGES 1 THRU 8.

REV. NO.	DATE	DESCRIPTION	BY
1	5–17–17	NO REVISIONS MADE TO THIS SHEET	DUB
2	6–02–17	REMOVED PROPOSED SAN. ESMT.	DUB
3	6–20–17	POND ACCESS ESMT. ON LOTS 260 & 261	DUB

DWG: 24702–PH2–SUBDIV–REV–2
DRAWN BY: MAM
CHECKED BY: DPT

PLAN BOOK	PAGE
365	3

PARCEL A–R1 REVISION No. 3
895,223.34 SQ. FT.
20.551 ACRES
PARCEL A–R1 REVISION No. 2 OPEN SPACE
RECORDED IN THE WEATHERBURN HEIGHTS PRD PHASE 2, REVISION No. 1 – LOT LINE REVISION TO PARCELS B–2 & B–3 PLAN
P.B.V. 346 PGS. 29 THRU 32
ZONED: R–AG

PELICAN DRIVE – 50' R/W
WEATHERBURN DRIVE – 50' R/W
CONDOR DRIVE – 50' R/W
FUTURE UNNAMED–50' R/W
WEATHERBURN HEIGHTS PRD PHASE 2 PLAN OF LOTS P.B.V. 345 PGS. 1–8

N/F GIGLIOTTI HOLDINGS, L.P. PARCEL B–1 RECORDED IN THE WEATHERBURN HEIGHTS PRD, PHASE 2 PLAN OF LOTS, P.B.V. 345, PG. 1 ZONED: R–AG

N/F GIGLIOTTI HOLDINGS, L.P. PARCEL 1B OPEN SPACE WEATHERBURN HEIGHTS PRD PHASE 1B, REV. No.1 SUBDIVISION PLAN P.B.V. 365 PG. 41–44 ZONED: R–AG

N/F GIGLIOTTI HOLDINGS, L.P. PARCEL 1A–1 OPEN SPACE WEATHERBURN HEIGHTS PRD PHASE 1A SUBDIVISION PLAN P.B.V. 317 PG. 30 ZONED: R–AG

PARCEL A WEATHERBURN HEIGHTS PRD PHASE 1A SUBDIVISION PLAN P.B.V. 317 PG. 30 ZONED: R–AG

PARCEL B–4 REQUIRED RIGHT–OF–WAY TO BE DEEDED TO THE COMMONWEALTH 4,999.86 SQ. FT. 0.115 ACRE RECORDED IN THE WEATHERBURN HEIGHTS PRD PLAN P.B.V. 345, PG. 1

50 FT. MARKWEST LIBERTY BLUESTONE, L.L.C. GAS TRANSMISSION RIGHT–OF–WAY

25' STORM SEWER EASEMENT
20' BLDG. LINE/UTILITY EASEMENT
40 FT. UTILITY EASEMENT CONSERVATION EASEMENT
STORMWATER DETENTION EASEMENT
20' STORM SEWER AND POND ACCESS EASEMENT
CONSERVATION EASEMENT
10' DRAINAGE ESMT.
20' BUILDING LINE/UTILITY ESMT.
20' SANITARY SEWER EASEMENT
10' UTILITY EASEMENT
30' STORM SEWER EASEMENT
10' DRAINAGE EASEMENT
20' BUILDING LINE/UTILITY EASEMENT
20' STORM SEWER EASEMENT
STORMWATER DETENTION EASEMENT (SEE DETAIL)
EX. 20' SANITARY SEWER EASEMENT
25' SANITARY SEWER EASEMENT

S 31°08'12" W 68.98'
S 60°36'52" E 178.68'
S 53°39'57" E 504.36'
S 33°27'53" W 693.36'
S 39°03'01" W 610.21'
S 00°35'44" E 321.13'
S 00°35'44" E 50.00'
N 89°24'16" E 270.82'
N 89°24'16" E 150.00'
R=275.00' A=43.97' CHORD BRG N45°35'44"W CHORD DIST 388.91'
R=275.00' A=50.34' (TOTAL) CHORD BRG N51°37'50"E CHORD DIST 434.74'
S 76°08'36" E 165.38' (TOTAL)
S 31°55'04" W 142.49'
S58°04'56"E 125.00'
79.92' (ESMT. TIE)
S40°27'18"W 43.39'
90.08' (ESMT.)
R=20.00' A=28.55'
S 58°04'56" E 125.00'
S 31°55'04" W 75.00'
S 58°04'56" E 125.00'
75.00' 10' 75.00'
190.01' (ESMT.)
S 31°55'04" W 135.00' (ESMT.)
75.00' S 31°55'04" W
20' (ESMT.)
S 31°55'04" W 724.98'

209	10' DRAINAGE ESMT.
210	
211	
206	
207	
208	
212	
213	
214	
205	
204	
215	
203	
245	20' BUILDING LINE/UTILITY ESMT.
246	
247	
248	
249	
250	
251	
216	
202	
201	
258	20' SANITARY SEWER EASEMENT
257	
256	
255	
254	
253	
252	
217	
218	
232	
233	20' BUILDING LINE/UTILITY ESMT.
234	
235	
236	
237	
238	
239	
231	
230	
244	20' SANITARY SEWER EASEMENT
243	
242	
241	
240	
229	
228	
227	
226	
225	
224	
223	
219	
220	
221	
222	
260	
261	
298	
297	
296	
295	
294	
293	
262	
263	
264	
265	
266	
267	
268	
184	
185	
186	
187	
188	
189	
196	
190	
195	
191	
194	
192	
193	

GIGLIOTTI HOLDINGS, L.P.
MIDDLESEX TOWNSHIP - BUTLER COUNTY - PA

1 inch = 60 ft.
60 0 30 60 120 240

TRANT CORPORATION
Environmental Surveying Site Civil Traffic
Engineering Permits & Approvals
PINE CENTER
11279 PERRY HIGHWAY SUITE 206
WEXFORD, PA 15090
PHONE: (724) 935-7900
FAX: (724) 935-6060
EMAIL: permits@trantcorp.com

WEATHERBURN HEIGHTS PRD PHASE 2, REVISION No. 2 PLAN OF LOTS

PROJ. NO.: 24702.55 | DATE: 05–09–2017

SHEET 2 OF 3

Plot Date:8/14/2017 7:55 AM File Name:M:\24000 PROJECTS\24702\DWG\15–PH2\24702–PH2–SUBDIVISION–REV–2.DWG Layout:2

REV. NO.	DATE	DESCRIPTION	BY
1	5-17-17	NO REVISIONS MADE TO THIS SHEET	DUB
2	6-02-17	REMOVED PROPOSED SAN. ESMT.	DUB
3	6-20-17	POND ACCESS ESMT. ON LOTS 260 & 261	DUB

DWG: 24702-PH2-SUBDIV-REV-2
DRAWN BY: MAM
CHECKED BY: DPT

GIGLIOTTI HOLDINGS, L.P.
MIDDLESEX TOWNSHIP - BUTLER COUNTY - PA

1 inch = 60 ft.

TRANT CORPORATION
Environmental Surveying Site Civil Traffic
Engineering Permits & Approvals
PINE CENTER
11279 PERRY HIGHWAY SUITE 206
WEXFORD, PA 15090
PHONE: (724) 935-7900
FAX: (724) 935-6060
EMAIL: permits@trantcorp.com

WEATHERBURN HEIGHTS PRD PHASE 2, REVISION No. 2 PLAN OF LOTS

PROJ. NO.: 24702.55
DATE: 05-09-2017

SHEET 3 OF 3

PLAN BOOK	PAGE
365	4

THIS PLAN IS A SUBDIVISION TO PARCEL A-R1, REVISION No. 2 RECORDED IN THE WEATHERBURN HEIGHTS PRD PHASE 2, REVISION No. 1 – LOT LINE REVISION TO PARCELS B-2 & B-3 PLAN, RECORDED IN PLAN BOOK VOLUME 346, PAGES 29 THRU 32.

THIS PLAN WILL ALSO RECORD A STORM SEWER ACCESS EASEMENT ON LOTS 260 AND 261. NO OTHER REVISIONS HAVE BEEN MADE TO LOTS 260 AND 261 RECORDED IN THE WEATHERBURN HEIGHTS PRD PHASE 2 PLAN OF LOTS, RECORDED IN PLAN BOOK VOLUME 345, PAGES 1 THRU 8.

Plot Date: 8/14/2017 7:55 AM File Name:M:\24000 PROJECTS\24702\DWG\15-PH2\24702-PH2-SUBDIVISION-REV-2.DWG Layout:3

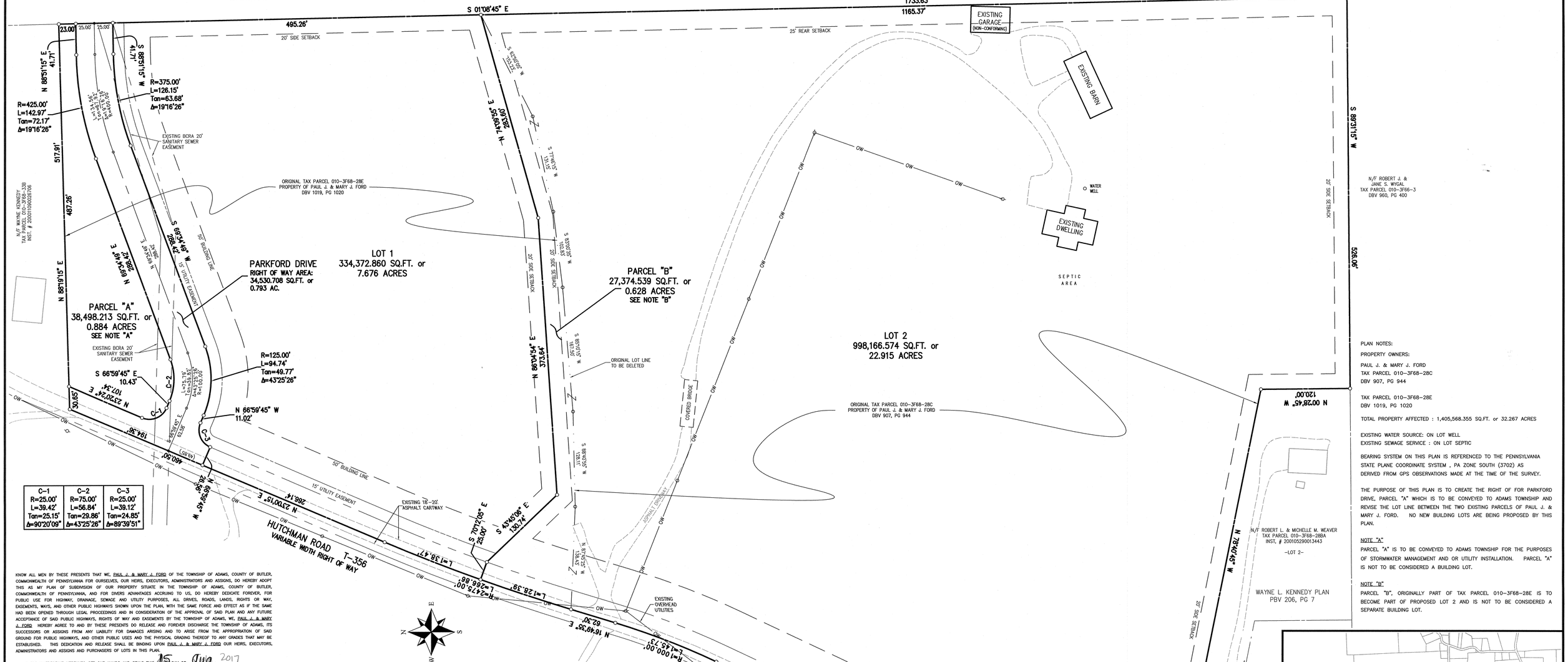

C-1	C-2	C-3
R=25.00'	R=75.00'	R=25.00'
L=39.42'	L=56.84'	L=39.12'
Tan=25.15'	Tan=29.86'	Tan=24.85'
Δ=90°20'09"	Δ=43°25'26"	Δ=89°39'51"

GRAPHIC SCALE

60 0 30 60 120 240

(IN FEET)
1 inch = 60 ft.

CURRENT ZONING : RC RURAL CONSERVATION

- MINIMUM LOT AREA : 43,560 SQ.FT. (1 ACRE)
- MINIMUM LOT WIDTH : 150.00 FEET AT BUILDING LINE
- MINIMUM FRONT SETBACK : 50.00 FEET FROM RIGHT OF WAY
- MINIMUM SIDE SETBACK : 20.00 FEET (TWO REQUIRED)
- MINIMUM REAR SETBACK : 25.00 FEET

PLAN NOTES:

PROPERTY OWNERS:

PAUL J. & MARY J. FORD
TAX PARCEL 010-3F68-28C
DBV 907, PG 944

TAX PARCEL 010-3F68-28E
DBV 1019, PG 1020

TOTAL PROPERTY AFFECTED : 1,405,568.355 SQ.FT. or 32.267 ACRES

EXISTING WATER SOURCE: ON LOT WELL
EXISTING SEWAGE SERVICE : ON LOT SEPTIC

BEARING SYSTEM ON THIS PLAN IS REFERENCED TO THE PENNSYLVANIA STATE PLANE COORDINATE SYSTEM , PA ZONE SOUTH (3702) AS DERIVED FROM GPS OBSERVATIONS MADE AT THE TIME OF THE SURVEY.

THE PURPOSE OF THIS PLAN IS TO CREATE THE RIGHT OF FOR PARKFORD DRIVE, PARCEL "A" WHICH IS TO BE CONVEYED TO ADAMS TOWNSHIP AND REVISE THE LOT LINE BETWEEN THE TWO EXISTING PARCELS OF PAUL J. & MARY J. FORD. NO NEW BUILDING LOTS ARE BEING PROPOSED BY THIS PLAN.

NOTE "A"

PARCEL "A" IS TO BE CONVEYED TO ADAMS TOWNSHIP FOR THE PURPOSES OF STORMWATER MANAGEMENT AND OR UTILITY INSTALLATION. PARCEL "A" IS NOT TO BE CONSIDERED A BUILDING LOT.

NOTE "B"

PARCEL "B", ORIGINALLY PART OF TAX PARCEL 010-3F68-28E IS TO BECOME PART OF PROPOSED LOT 2 AND IS NOT TO BE CONSIDERED A SEPARATE BUILDING LOT.

KNOW ALL MEN BY THESE PRESENTS THAT WE, PAUL J. & MARY J. FORD OF THE TOWNSHIP OF ADAMS, COUNTY OF BUTLER, COMMONWEALTH OF PENNSYLVANIA FOR OURSELVES, OUR HEIRS, EXECUTORS, ADMINISTRATORS AND ASSIGNS, DO HEREBY ADOPT THIS AS MY PLAN OF SUBDIVISION OF OUR PROPERTY SITUATE IN THE TOWNSHIP OF ADAMS, COUNTY OF BUTLER, COMMONWEALTH OF PENNSYLVANIA, AND FOR DIVERS ADVANTAGES ACCRUING TO US, DO HEREBY DEDICATE FOREVER, FOR PUBLIC USE FOR HIGHWAY, DRAINAGE, SEWAGE AND UTILITY PURPOSES, ALL DRIVES, ROADS, LANDS, RIGHTS OR WAY, EASEMENTS, WAYS, AND OTHER PUBLIC HIGHWAYS SHOWN UPON THE PLAN, WITH THE SAME FORCE AND EFFECT AS IF THE SAME HAD BEEN OPENED THROUGH LEGAL PROCEEDINGS AND IN CONSIDERATION OF THE APPROVAL OF SAID PLAN AND ANY FUTURE ACCEPTANCE OF SAID PUBLIC HIGHWAYS, RIGHTS OF WAY AND EASEMENTS BY THE TOWNSHIP OF ADAMS, WE, PAUL J. & MARY J. FORD HEREBY AGREE TO AND BY THESE PRESENTS DO RELEASE AND FOREVER DISCHARGE THE TOWNSHIP OF ADAMS, ITS SUCCESSORS OR ASSIGNS FROM ANY LIABILITY FOR DAMAGES ARISING AND TO ARISE FROM THE APPROPRIATION OF SAID GROUND FOR PUBLIC HIGHWAYS, AND OTHER PUBLIC USES AND THE PHYSICAL GRADING THEREOF TO ANY GRADES THAT MAY BE ESTABLISHED. THIS DEDICATION AND RELEASE SHALL BE BINDING UPON PAUL J. & MARY J. FORD OUR HEIRS, EXECUTORS, ADMINISTRATORS AND ASSIGNS AND PURCHASERS OF LOTS IN THIS PLAN.

IN WITNESS WHEREOF,WE HEREUNTO SET OUR HANDS AND SEALS THIS 15 DAY OF Aug. 2017
ATTEST:

PAUL J. FORD MARY J. FORD

THE FOREGOING ADOPTION IS MADE BY PAUL J. & MARY J. FORD WITH THE FULL UNDERSTANDING AND AGREEMENT THAT THE APPROVAL OF THE TOWNSHIP BOARD OF SUPERVISORS OF ADAMS TOWNSHIP, IF ATTACHED HERETO, WILL BECOME NULL AND VOID UNLESS THIS PLAN IS RECORDED IN THE RECORDER OF DEEDS OFFICE OF BUTLER COUNTY WITHIN NINETY (90) DAYS OF SAID APPROVAL.

WE ALSO CERTIFY THAT THE TITLE TO OUR PROPERTY AS SHOWN HEREON IS IN THE NAME OF PAUL J. & MARY J. FORD AS RECORDED IN THE BUTLER COUNTY RECORDER OF DEEDS OFFICE AT DEED BOOK 907, PG 944 & DEED BOOK 1019, PG 1020.

COMMONWEALTH OF PENNSYLVANIA
COUNTY OF BUTLER } SS:

BEFORE ME, THE SUBSCRIBER, A NOTARY PUBLIC IN AND FOR SAID COUNTY AND COMMONWEALTH, PERSONALLY APPEARED THE ABOVE NAMED PAUL J. & MARY J. FORD WHO ACKNOWLEDGED THE FOREGOING RELEASE AND DEDICATION AND PLAN OF SUBDIVISION TO BE HIS/HER/THEIR ACT AND DEED AND DESIRED THE SAME TO BE RECORDED AS SUCH.

WITNESS MY HAND AND NOTARIAL SEAL THIS 15 DAY OF Aug. 2017
MY COMMISSION EXPIRES THE 15 DAY OF August 2021
Paula K Rouda
NOTARY PUBLIC

COMMONWEALTH OF PENNSYLVANIA
NOTARIAL SEAL
Paula K. Rouda, Notary Public
Adams Twp., Butler County
My Commission Expires Aug. 15, 2021
MEMBER, PENNSYLVANIA ASSOCIATION OF NOTARIES

I, JAMES A. SPERDUTE, PLS PROFESSIONAL LAND SURVEYOR OF THE COMMONWEALTH OF PENNSYLVANIA, DO HEREBY CERTIFY, TO THE BEST OF MY KNOWLEDGE,INFORMATION AND BELIEF, THAT THIS PLAN CORRECTLY REPRESENTS THE LOTS, LANDS, STREETS, AND HIGHWAYS AS SURVEYED AND PLOTTED BY ME FOR THE OWNERS OR AGENTS.

JAMES A. SPERDUTE, RPS. # 24457-E DATE 7/18/17

I, Ronald Olsen, A REGISTERED PROFESSIONAL ENGINEER FOR THE TOWNSHIP OF ADAMS, DO HEREBY CERTIFY THAT THIS SUBDIVISION PLAN MEETS ALL THE ENGINEERING AND DESIGN REQUIREMENTS OF THE ADAMS TOWNSHIP SUBDIVISION AND ZONING ORDINANCES

DATE 8/4/17 REG # 26400 E

REVIEWED BY THE BUTLER COUNTY PLANNING COMMISSION THIS ____ DAY OF ____, 20__

SECRETARY, BUTLER COUNTY PLANNING COMMISSION CHAIRMAN, BUTLER COUNTY PLANNING COMMISSION

REVIEWED BY THE PLANNING COMMISSION OF THE ~~TOWNSHIP OF ADAMS~~ County of Butler THIS 26ST DAY OF JULY 20 17

CHAIRPERSON, PLANNING COMMISSION SECRETARY, PLANNING COMMISSION

THE BOARD OF SUPERVISORS OF THE TOWNSHIP OF ADAMS HEREBY GIVES PUBLIC NOTICE THAT IN APPROVING THIS PLAN FOR RECORDING PURPOSES ONLY, THE TOWNSHIP OF ADAMS ASSUMES NO OBLIGATIONS, LEGAL OR OTHERWISE, EXPRESSED OR IMPLIED EITHER TO ACCEPT SAID STREETS AS TOWNSHIP STREETS OR ROADS OR GRADE, PAVE AND CURB THE STREETS IN SAID PLAN, OR TO CONSTRUCT SEWERS THEREIN OR TO INSTALL ANY OTHER SUCH SERVICE ORDINARILY INSTALLED IN TOWNSHIP STREETS OR ROADS.

APPROVED BY THE BOARD OF SUPERVISORS OF THE TOWNSHIP OF ADAMS THIS 24th DAY OF July 20 17

SECRETARY, ADAMS TOWNSHIP SUPERVISORS ADAMS TOWNSHIP SUPERVISOR
CHAIRMAN, ADAMS TOWNSHIP SUPERVISORS ADAMS TOWNSHIP SUPERVISOR
ADAMS TOWNSHIP SUPERVISOR

COMMONWEALTH OF PENNSYLVANIA) SS:)
COUNTY OF BUTLER)

RECORDED IN THE RECORDERS OFFICE FOR THE RECORDING OF DEEDS, PLANS, ETC IN SAID COUNTY IN PLAN BOOK VOLUME 365 PAGE 5 GIVEN UNDER MY HAND AND SEAL THIS 15 DAY OF AUGUST 2017

BUTLER COUNTY RECORDER OF DEEDS

MICHELE M. MUSTELLO
RECORDER OF DEEDS
My Commission Expires First Monday in January 2020

Instr:201708150017241 08/15/2017
Pages:1 F:$45.00 12:22PM
Michele Mustello T20170012335
Butler County Recorder PL

PLAN BOOK	PAGE
365	5

BUTLER COUNTY RECORDER OF DEEDS

BUTLER COUNTY PLANNING COMMISSION

ADAMS TOWNSHIP ENGINEER

SURVEYOR

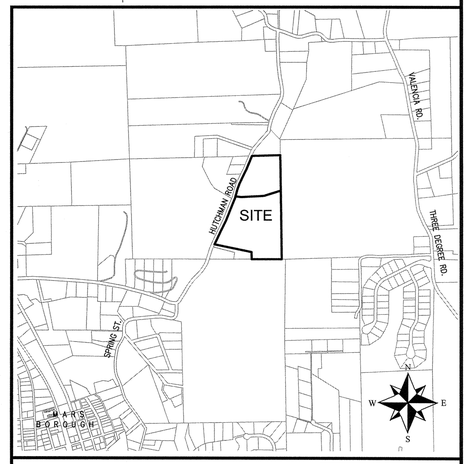

LOCATION MAP 1" = 2000'

DRAWING NUMBER:	1001-1717450
DRAWING SCALE:	1"=60'
DATE:	JULY 11, 2017
DRAWN BY:	JSS
REVISIONS:	
07.14.2017...PER COMMENTS	

SHEET 1 OF 1

PAUL J. & MARY J. FORD PLAN OF LOTS NO. 1

BEING A SUBDIVISION AND REVISION OF
TAX PARCELS 010-3F68-28C & 010-3F68-28E

ADAMS TOWNSHIP, BUTLER COUNTY, PENNSYLVANIA

SPERDUTE LAND SURVEYING
SLS
HARMONY, PA
724-452-4362
SLS1@comcast.net
SURVEYING • LAYOUT • TOPOGRAPHY • LAND DEVELOPMENT

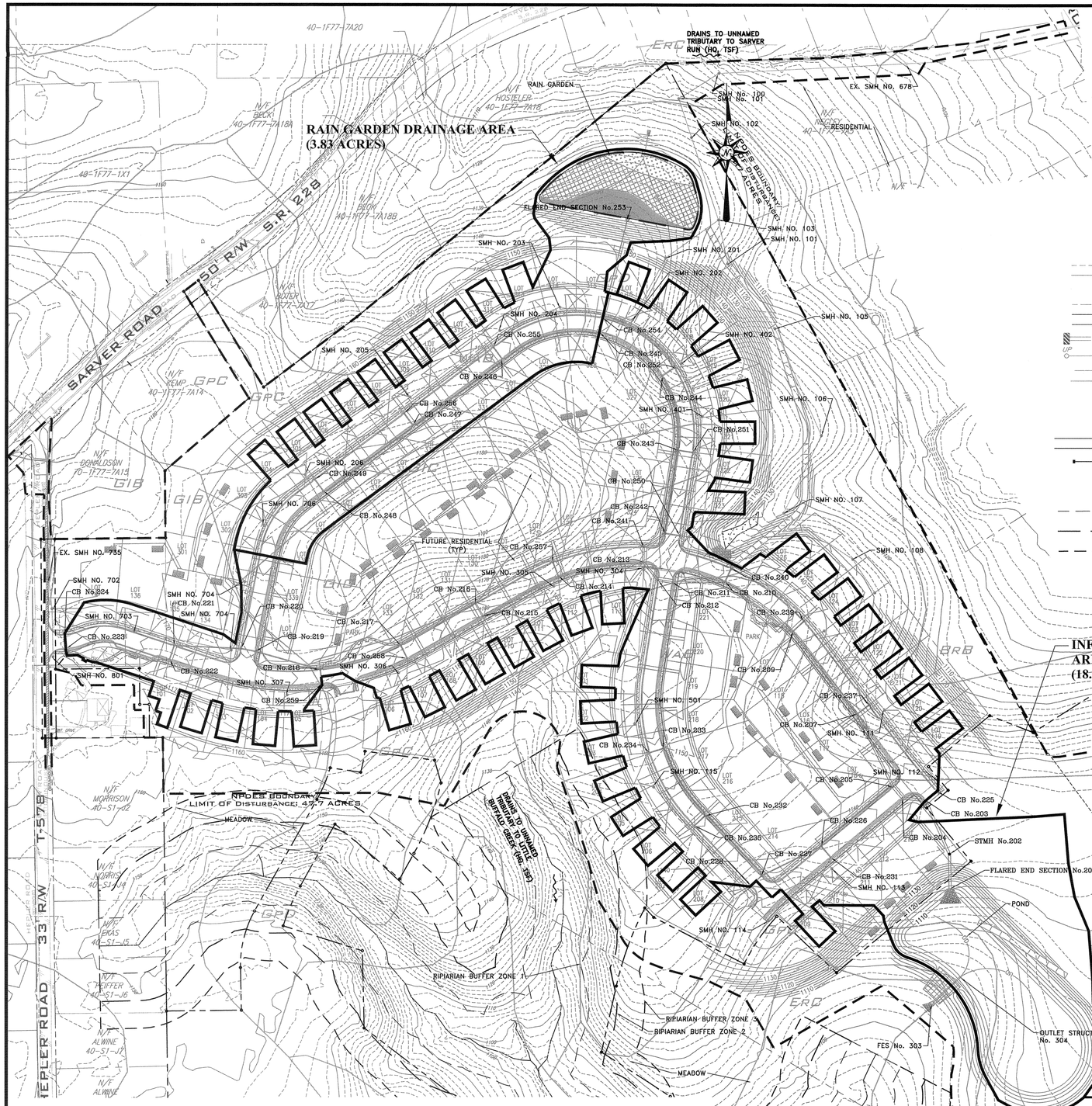

PROJECT DATUM

Horizontal: Based on the Pennsylvania State Plane Coordinate System and Control Monumentation for the Southern Beltway SR 0576, Section 54C Project.

Vertical: U.S. Coast and Geodetic Survey Sea Level Datum of 1988 (NAVD 88).

PLANT LIST - BIO RETENTION AND STORMWATER MANAGEMENT FACILITY

KEY	QTY.	BOTANICAL NAME	COMMON NAME	SIZE	SPACING
	511	Erianthus contortus	Shortbeard Plumegrass	1 Gal. Cont.	3' O.C.
	743	Panicum virgatum 'Shenendoah'	Red Switchgrass	1 Gal. Cont.	3' O.C.
	15,629 S.F.	Retention Basin Wildlife Mix (ERNMIX-127)	N/A	N/A	SEEDING RATE: 1/3-1/2lb per 1,000 S.F.
LIMIT OF SOIL MIX	2,990 C.Y.	*SOIL MIX MUST CONTAIN AND BE INSTALLED AS FOLLOWS: (1) 20% ORGANIC MATERIAL SUCH AS COMPOST 30% SAND, PEA GRAVEL, OR CRUSHED SLAG 50% TOPSOIL (2) SOIL MIX MUST CONTAIN NO MORE THAN 10% CLAY. (3) SOIL MIX MUST NOT BE COMPACTED. (4) SOIL MIX MUST BE PLACE AT A 3-FOOT DEPTH MINIMUM. (5) SOIL MIX TO BE PLACED AT THE ENTIRE BOTTOM OF THE BIO-RETENTION FACILITY.			

EXISTING LEGEND

CONTOUR (2-ft)
1220 CONTOUR (10-ft)
MANHOLES: SANITARY, STORM, TELEPHONE, MISC
PAVEMENT EDGE
PROPERTY LINE (Parcel)
PROPERTY LINE (ROW)
15" CPP — UTILITY LINE (Storm) W/ CATCH BASIN AND MANHOLE
UP GW — UTILITY LINE (Telephone) W/ POLE, OVERHEAD WIRE AND GUY WIRE
UTILITY LINE (Gas)
UT&C — UTILITY LINE (Underground Telephone)

PROPOSED LEGEND

CONTOUR (2-ft)
1220 CONTOUR (10-ft)
UTILITY LINE (Storm) W/ CATCH BASIN AND MANHOLE
DENOTES APPROX. ROOF SUMP LOCATION
NOTE: LIMIT COMPACTION AND DISTURBANCE OF AREA TO BE UTILIZED FOR ROOF SUMP CONSTRUCTION
STREAM BUFFER ZONE 1
STREAM BUFFER ZONE 2
STREAM BUFFER ZONE 3

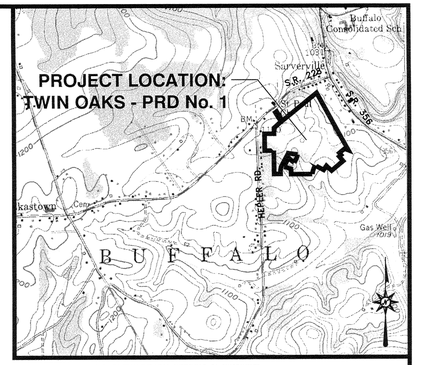

SOURCE: PORTIONS OF MAP TAKEN FROM THE USGS CURTISVILLE, PA QUADRANGLES

SITE LOCATION MAP
1"=1500'

PERMITTEE ADOPTION

Mr. John Allen, John Allen Jr. Family Trust, the permit holder of NPDES Permit #PAD100002 adopts this plan as the Post-Construction Stormwater Management Plan.

Mr. John Allen

8-15-17
Date

OWNER ADOPTION

The John Allen Jr., Family Trust, owner of the land shown on Instrument No. 201611070023397 having plan name John M. Allen Jr. Family Trust Plan No. 1, recorded in PBV 359 Page 15&16, in Buffalo Township, Butler County as recorded in the office of the Recorder of Deeds of Butler County, Pennsylvania, adopts this plan as its Post-Construction Stormwater Management Plan. This adoption shall be binding upon the property owner and upon its successors, heirs and assigns.

Carrie Bedillion Notary
Name and Title of Witness

8.15.17
Date

The John Allen Jr., Family Trust
Name of Owner

President/Owner
Signature and Title of Officer

COUNTY OF BUTLER:

SS:

COMMONWEALTH OF PENNSYLVANIA:

Before me, the undersigned Notary Public in and for the Commonwealth of Pennsylvania and County of Butler, personally appeared the above named John Allen Jr. of The John Allen Jr., Family Trust, who stated that he/she is authorized to execute the above adoption on behalf of the owner and acknowledged the foregoing adoption to be the act of the owner.

Witness my hand and notarial seal this 15 day of August, 2017.

My commission expires the 19th day of July, 2020.

Notary Public

NOTARY

COMMONWEALTH OF PENNSYLVANIA
NOTARIAL SEAL
Heidi M. Holben, Notary Public
Clinton Twp., Butler County
My Commission Expires July 19, 2020
MEMBER, PENNSYLVANIA ASSOCIATION OF NOTARIES

Instr:201708150017293 08/15/2017
Pages:2 F:$85.00 3:25PM
Michele Mustello T20170813360
Butler County Recorder ND

PROOF OF RECORDING

Recorded in the office of the Recorder of Deeds of the County of Butler, Commonwealth of Pennsylvania, in Plan Book Volume 365, Page(s) 6-7.

Given under my hand and seal this 15th day of August, 2017.

Recorder of Deeds

RECORDER OF DEEDS

MICHELE M. MUSTELLO
RECORDER OF DEEDS
My Commission Expires First Monday in January 2020

PLAN BOOK	PAGE
365	6

COMMONWEALTH OF PENNSYLVANIA
REGISTERED PROFESSIONAL
JOHN R. HEYL
ENGINEER NO. PE-080214

Scale:	No.	Date	Description	By	No.	Date	Description	By	No.	Date	Description	By
1"=100'												
Drawn By	Checked By	Approved By										

Lennon, Smith, Souleret Engineering, Inc.
846 4th Avenue
Coraopolis, Pennsylvania 15108
Phone: 412-264-4400
Fax: 412-264-1200
email: info@lsse.com

Filename: M677NOT.dwg
Date: August 2017

John Allen Jr. Family Trust
P.O. Box 430
Saxonburg, Pennsylvania 16056

Twin Oaks
PRD No. 1
Situate In
Buffalo Township, Butler County, Pennsylvania

Sheet Title: Post Construction Stormwater Management Recording Plan
Drawing No.: M677-01NOT
Sheet No.: 1 of 2

N:\PROJ\1000\1000-677\Dwg\M677NOT.dwg Layout=PCSMT Post Construction Stormwater Management Plan User=KWish Plotted=8/3/2017 1:13 PM

CONTRACTOR SHALL CONFIRM THE APPROPRIATE TYPICAL ON-LOT BMPs BASED ON HOUSE LAYOUT AND SITE TOPOGRAPHY.

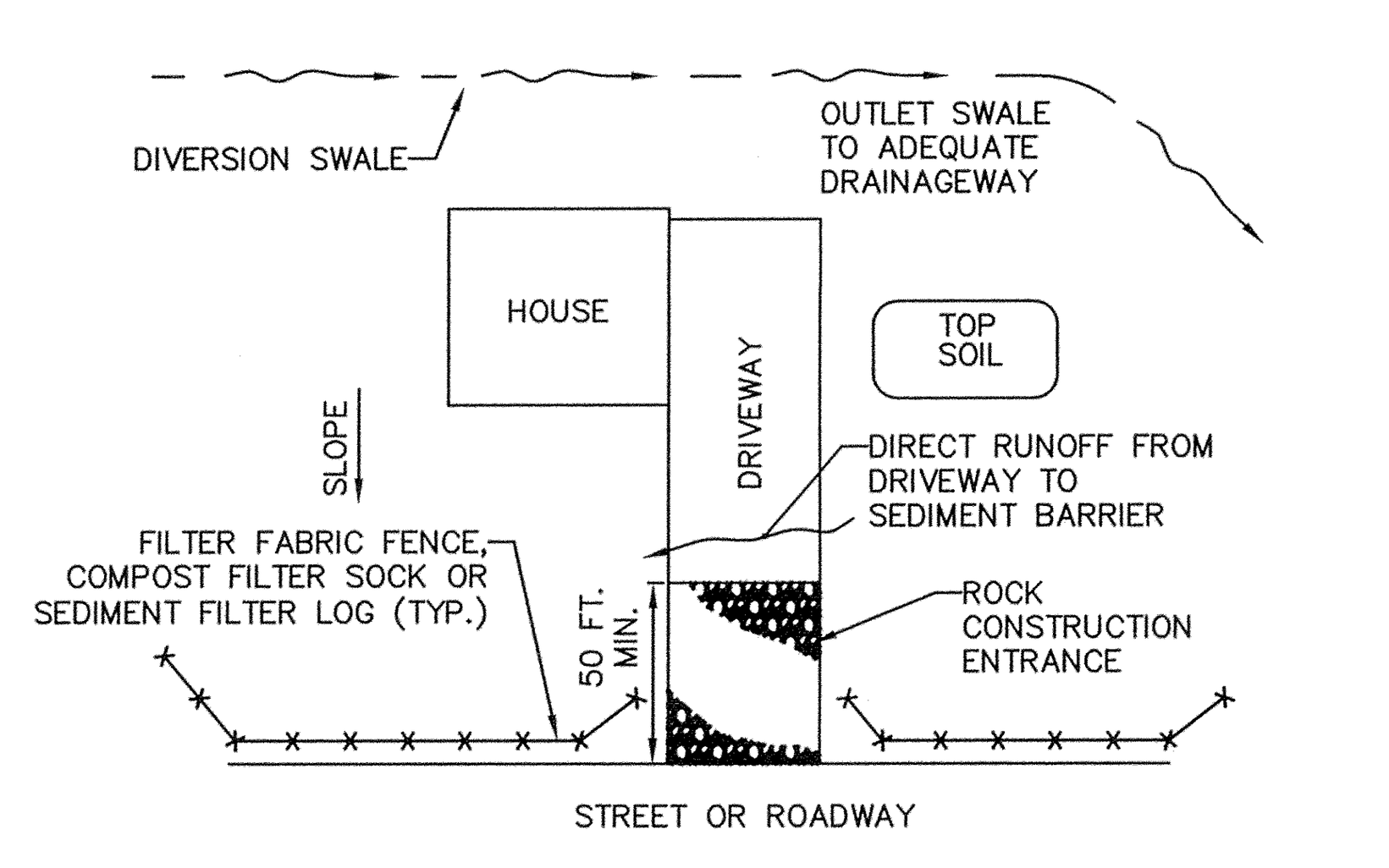

PLAN VIEW

NOTES:

THE UPSLOPE DIVERSION CHANNEL SHOULD BE INSTALLED WHEREVER THE LOT EXTENDS MORE THAN 150 FEET ABOVE THE ROADWAY OR WHERE RUNOFF FORM AREAS ABOVE THE LOT IS NOT OTHERWISE DIVERTED AWAY FROM THE LOT. THE CHANNEL SHOULD BE PROPERLY SIZED AND PROVIDED WITH A SUITABLE PROTECTIVE LINING. THE DESIGNER AND/OR CONTRACTOR MUST EXERCISE CAUTION TO PROTECT ALL DOWNSTREAM PROPERTY OWNERS WHEN SELECTING A DISCHARGE POINT FOR THIS CHANNEL.

STANDARD CONSTRUCTION DETAIL #10-1
TYPICAL ON-LOT BMPs FOR LOT ABOVE ROADWAY

NOT TO SCALE

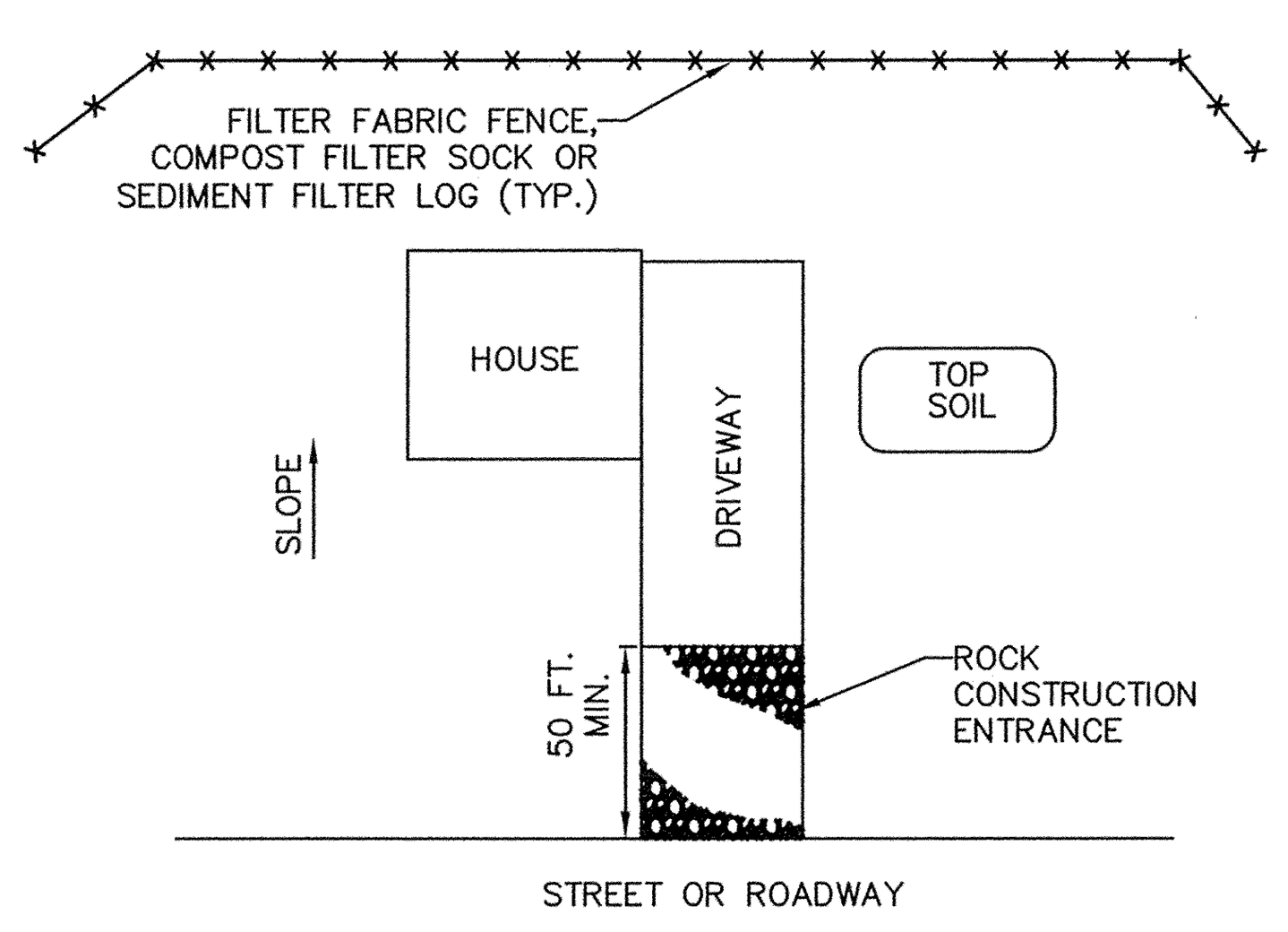

PLAN VIEW

NOTES:

THE AREA DOWNSLOPE OF THE FILTER FENCE/COMPOST SOCK BARRIER/SEDIMENT FILTER LOG MAY NOT BE UNDER DEVELOPMENT OR OTHERWISE DISTURBED.

STANDARD CONSTRUCTION DETAIL #10-2
TYPICAL ON-LOT BMPs FOR LOT BELOW ROADWAY

NOT TO SCALE

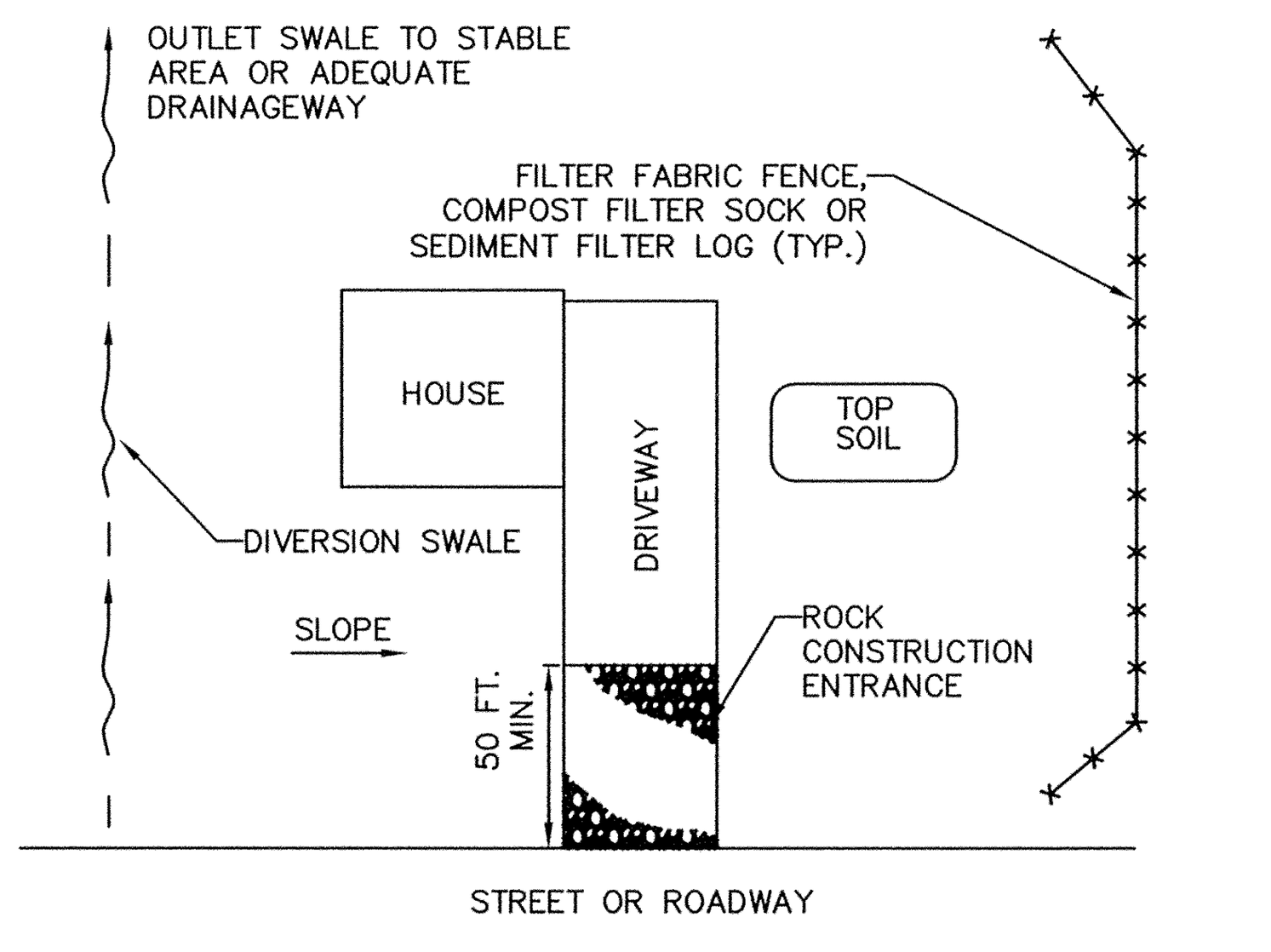

PLAN VIEW

NOTES:

THE AREA DOWNSLOPE OF THE FILTER FENCE/COMPOST SOCK BARRIER/SEDIMENT FILTER LOG MAY NOT BE UNDER DEVELOPMENT OR OTHERWISE DISTURBED.

THE UPSLOPE DIVERSION CHANNEL SHOULD BE INSTALLED WHEREVER RUNOFF FROM AREAS ABOVE THE LOT ARE NOT OTHERWISE DIVERTED AWAY FROM THE LOT. THE CHANNEL SHOULD BE PROPERLY SIZED AND PROVIDED WITH A SUITABLE PROTECTIVE LINING. THE DESIGNER AND/OR CONTRACTOR MUST EXERCISE CAUTION TO PROTECT ALL DOWNSTREAM PROPERTY OWNERS WHEN SELECTING A DISCHARGE POINT FOR THIS CHANNEL.

IN AREAS WHERE SLOPE IS AT AN OBLIQUE ANGLE TO THE ROADWAY, BMPS SHALL BE ADJUSTED ACCORDINGLY.

DIVERSION CHANNEL MAY OUTLET TO ROADSIDE DITCH OR STORM SEWER SYSTEM, BUT NOT ONTO STREET OR ROADWAY.

STANDARD CONSTRUCTION DETAIL #10-3
TYPICAL ON-LOT BMPs FOR LOT ALONG ASCENDING OR DESCENDING ROADWAY

NOT TO SCALE

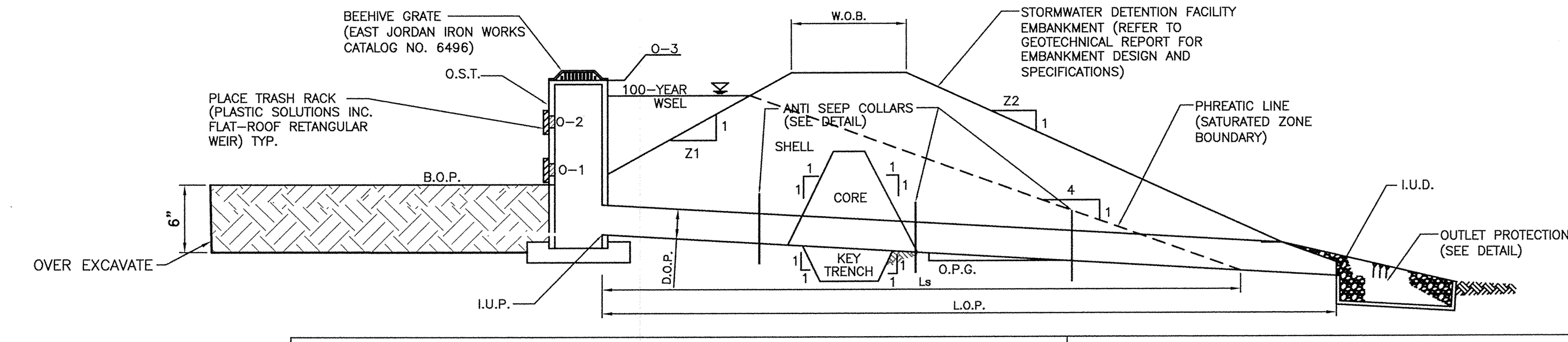

FACILITY DIMENSIONS										FACILITY ELEVATIONS								
BASIN NO.	Z1 (FT)	Z2 (FT)	ORIFICE NO. 1 (O-1) (FT)	DIAMETER OF PIPE (D.O.P.) (IN-TYPE)	*LENGTH OF PIPE (L.O.P.) (FT)	OUTLET PIPE GRADE (O.P.G.) (%)	WIDTH OF BERM (W.O.B.) (FT)	OUTLET STRUCTURE TYPE (O.S.T.) (FT x FT)	LENGTH OF SATURATION ZONE (Ls) (FT)	ORIFICE NO. 1 INVERT (O-1) (VFT)	ORIFICE NO. 1 SIZE (O-1) (FT)	ORIFICE NO. 2 INVERT (O-2) (VFT)	ORIFICE NO. 2 SIZE (O-2) (FT)	PRINCIPLE SPILLWAY INVERT (O-3) (VFT)	BOTTOM OF POND (B.O.P.) (VFT)	TOP OF WET POOL (T.O.P.) (VFT)	INVERT UP STREAM (I.U.P.) (VFT)	INVERT DOWN-STREAM (I.U.D.) (VFT)
1	3.0	3.0	2	24"-RCP	66	1.45	10	TYPE "M" 4 x 2	52	1110.50	0.5 ø	1112.00	6"Wx24"H	1114.00	1110.00	1113.52	1106.65	1106.00

NOTES:

1. "*" DENOTES LENGTH TO 1st DOWNSTREAM STRUCTURE
2. (VFT) DENOTES "VERTICAL FEET"
3. ANTI-SEEP COLLARS SHALL BE EVENLY SPACED ALONG OUTLET PIPE WITHIN THE "Ls" LENGTH UNLESS "Ls" IS GREATER THAN PIPE OUTFALL LENGTH (IN THIS CASE EVENLY SPACE COLLARS ALONG OUTFALL PIPE LENGTH "LOP"). COLLARS SHALL NOT BE CLOSER THAN 2' TO A PIPE JOINT. REFER TO ANTI-SEEP COLLAR DETAIL FOR QUANTITY AND SIZES.
4. SOIL MIX TO CONSIST OF 20% ORGANIC MATERIAL (SUCH AS COMPOST), 30% SAND, PEA GRAVEL, OR CRUSHED SLAG AND 50% TOPSOIL (ALL ROCK AND FOREIGN MATTER MUST BE REMOVED). SOIL MIX SHOULD CONTAIN LESS THAN 10% CLAY.
5. DO NOT COMPACT SOIL MIX ONCE PLACED.
6. PROVIDE A MINIMUM OF 6" OF STONE ABOVE AND BELOW THE PERFORATED PIPE.

RAIN GARDEN SEED MIX (ERNMIX-180) SEEDING RATE: 1/3-1/2 LB PER 1,000 S.F.
*SOIL MIX SHALL CONTAIN AND BE INSTALLED AS FOLLOWS:

(1) 20% ORGANIC MATERIAL SUCH AS COMPOST
30% SAND, PEA GRAVEL, OR CRUSHED SLAG
50% TOPSOIL.
(2) SOIL MIX SHALL CONTAIN NO MORE THAN 10% CLAY.
(3) SOIL MIX SHALL NOT BE COMPACTED.
(4) SOIL MIX MUST BE PLACED AT A 2-FOOT DEPTH MINIMUM.
(5) SOIL MIX TO BE PLACED AT THE ENTIRE BOTTOM OF THE BIO-RETENTION FACILITY.

STORMWATER DETENTION FACILITY

N.T.S.

REQUIRED STORAGE VOLUME

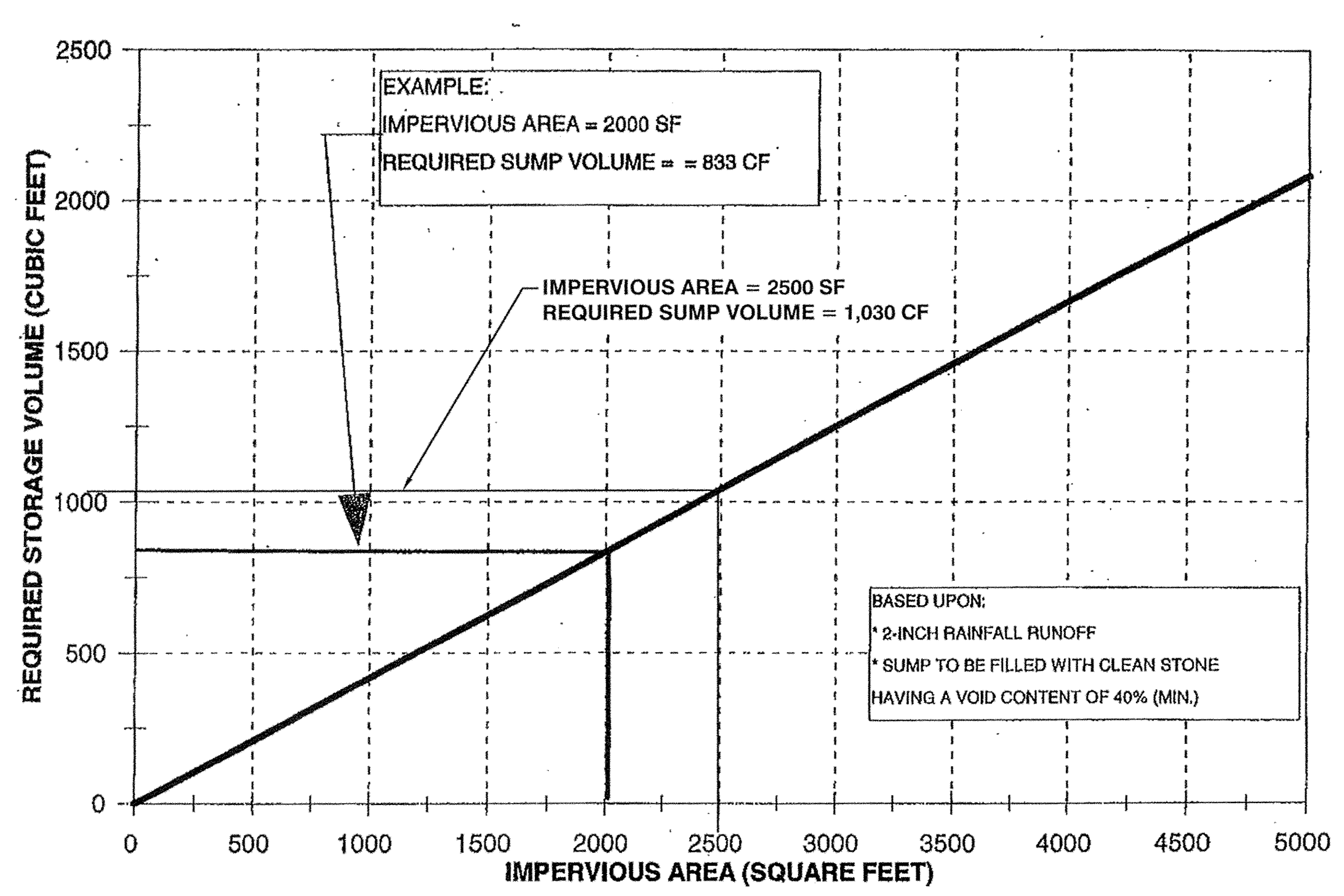

NOTES:

1. ALL PIPE SHALL BE PVC SCHEDULE 40
2. ALL SUMPS MINIMUM 25' FROM HOUSE
3. ALL SUMPS SHALL BE 20'W x 25'L x 2.1'D FOR 2,500 SF OF IMPERVIOUS AREA. SUMP AREA SHALL BE 20% OF IMPERVIOUS AREA, MIN.
4. ALL SUMPS SHALL BE CONSTRUCTED WITH 3' MIN. COVER TO FINISH GRADE.
5. SUMP TO BE FILLED WITH CLEAN STONE HAVING A VOID CONTENT OF 40% OR MORE.

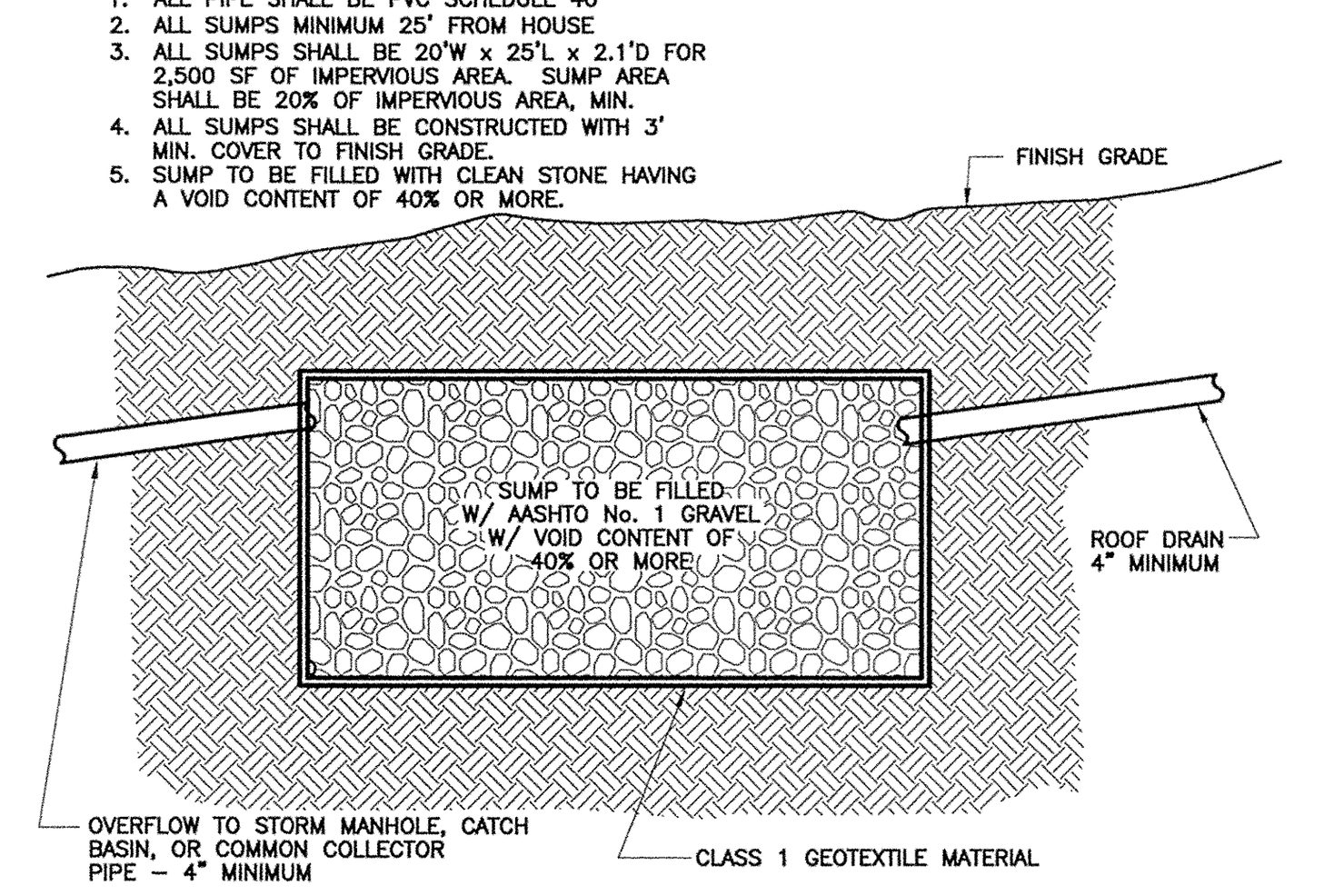

WITH OUTLET PIPE

ROOF SUMP DETAIL

N. T. S.

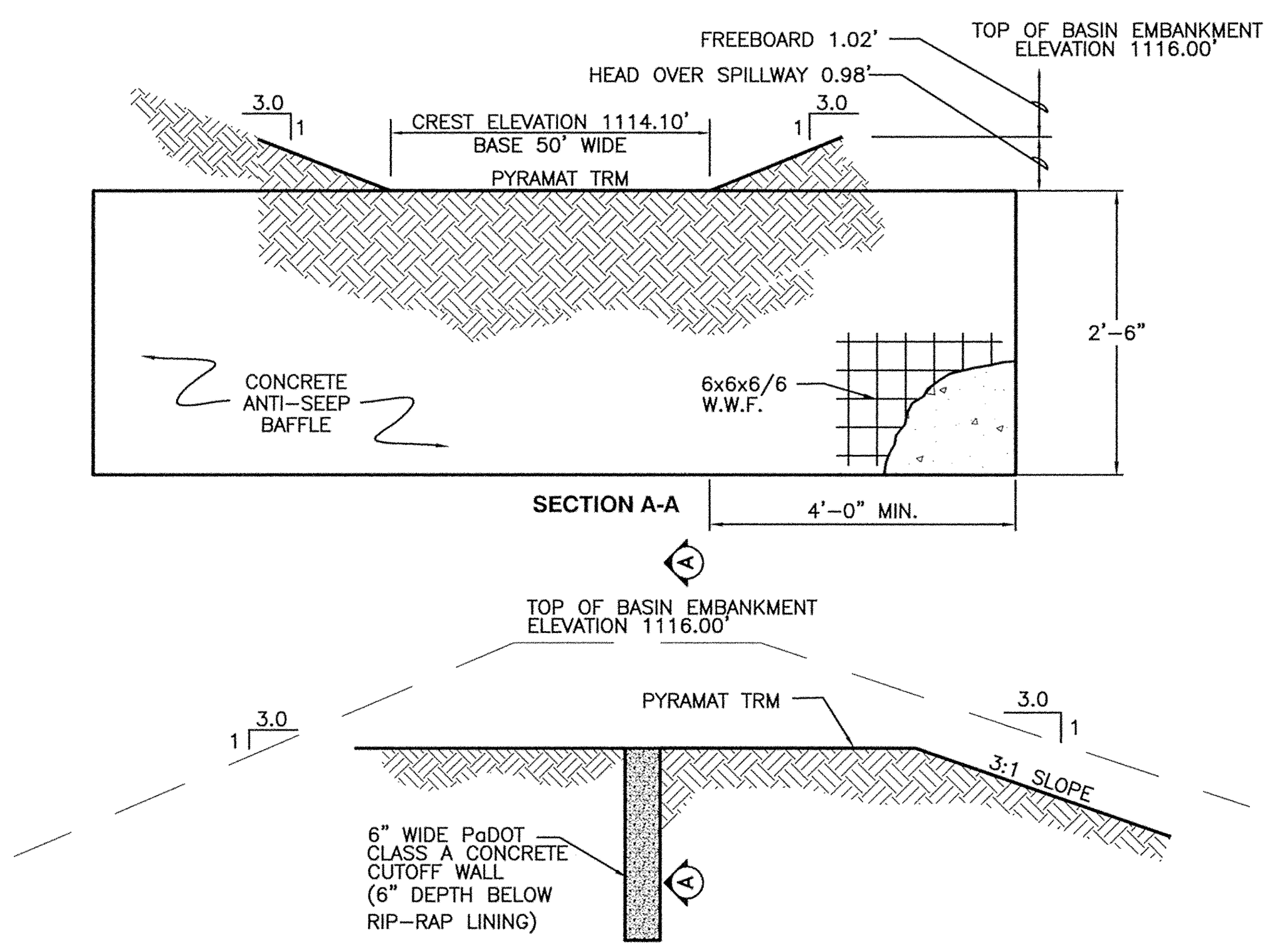

STORMWATER MANAGEMENT DETENTION BASIN
EMERGENCY SPILLWAY

N. T. S.

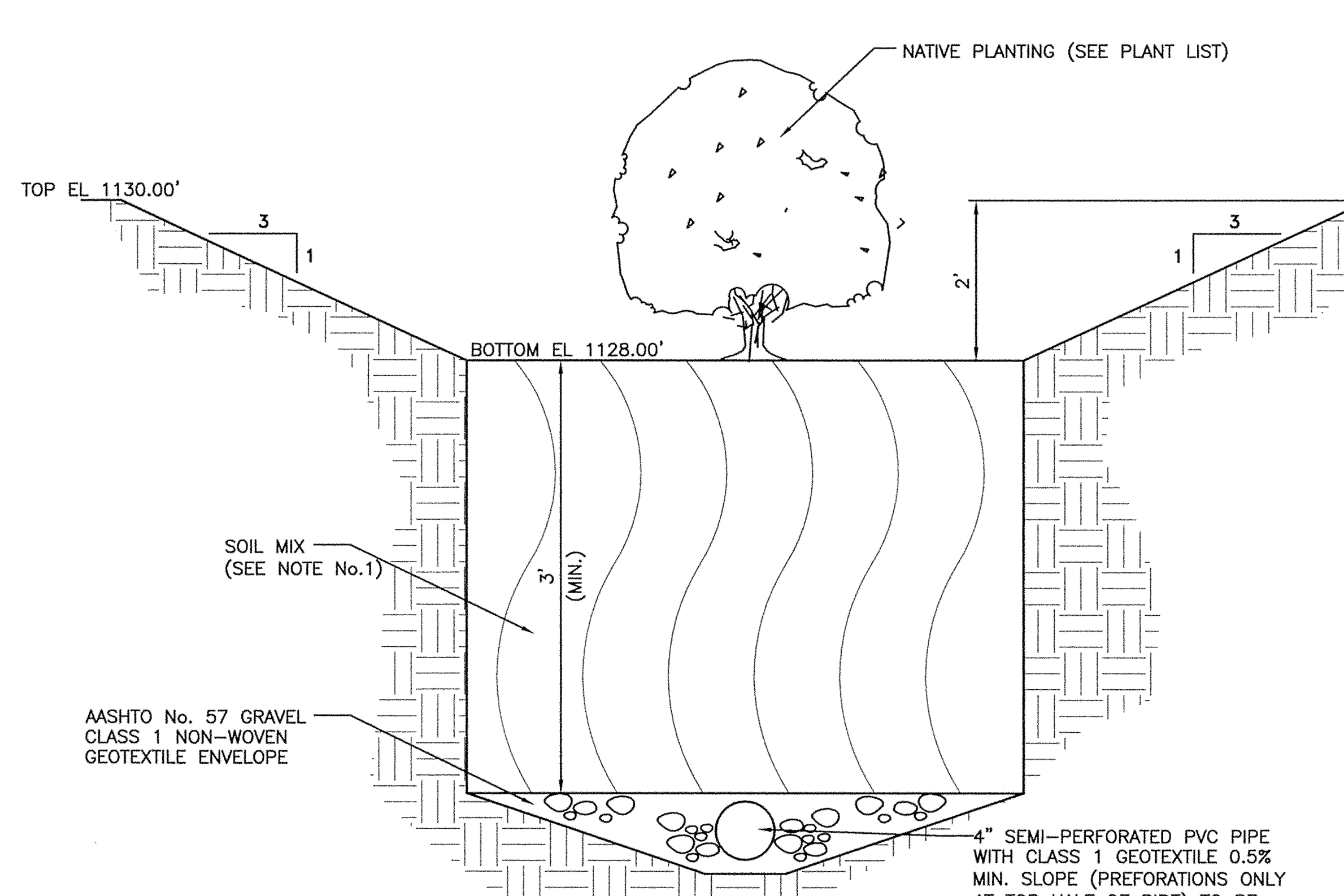

NOTES:

1. SOIL MIX TO CONSIST OF 20% ORGANIC MATERIAL (SUCH AS COMPOST), 30% SAND, PEA GRAVEL, OR CRUSHED SLAG AND 50% TOPSOIL (ALL ROCK AND FOREIGN MATTER MUST BE REMOVED). SOIL MIX SHOULD CONTAIN LESS THAN 10% CLAY.
2. DO NOT COMPACT SOIL MIX ONCE PLACED.
3. PROVIDE A MINIMUM OF 6" OF STONE ABOVE AND BELOW THE PERFORATED PIPE.

RAIN GARDEN SEED MIX (ERNMIX-180) SEEDING RATE: 1/3-1/2 LB PER 1,000 S.F.
*SOIL MIX SHALL CONTAIN AND BE INSTALLED AS FOLLOWS:

(1) 20% ORGANIC MATERIAL SUCH AS COMPOST
30% SAND, PEA GRAVEL, OR CRUSHED SLAG
50% TOPSOIL.
(2) SOIL MIX SHALL CONTAIN NO MORE THAN 10% CLAY.
(3) SOIL MIX SHALL NOT BE COMPACTED.
(4) SOIL MIX MUST BE PLACED AT A 3-FOOT DEPTH MINIMUM.
(5) SOIL MIX TO BE PLACED AT THE ENTIRE BOTTOM OF THE BIO-RETENTION FACILITY.

BIO-FILTRATION / RAIN GARDEN BASIN

N. T. S.

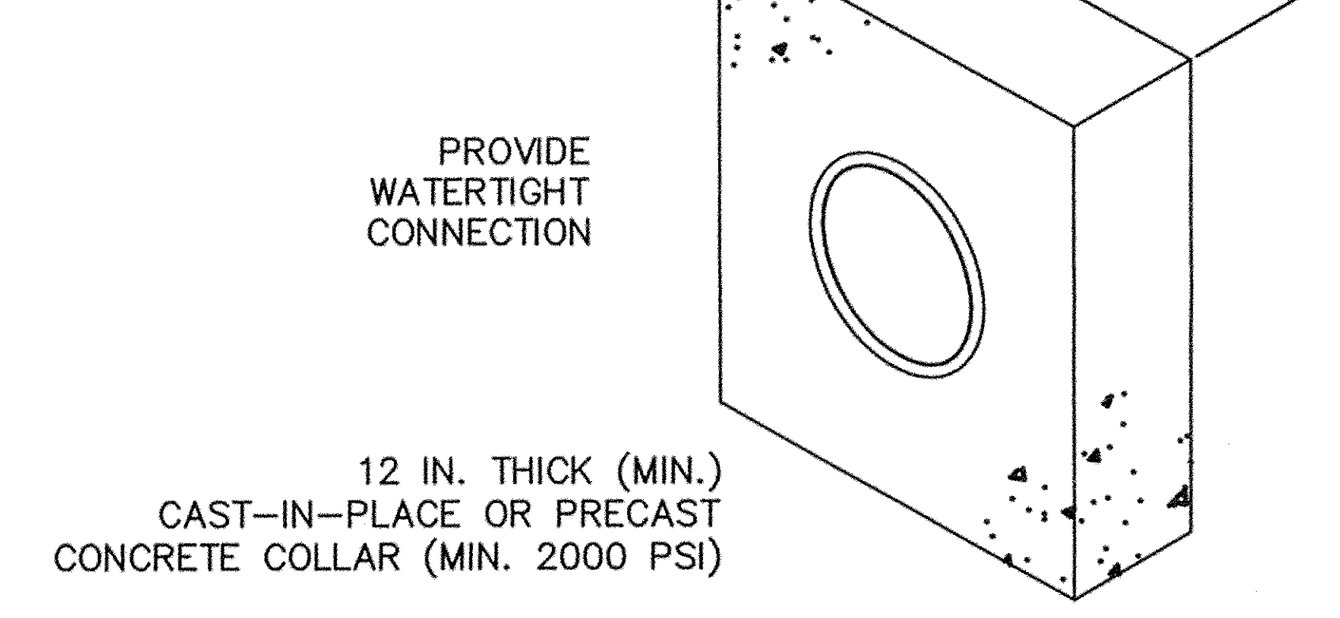

BASIN OR TRAP NO.	PIPE SIZE (IN)	S (IN)	NO. OF COLLARS	RISER TO FIRST COLLAR (FT)	COLLAR SPACING (FT)
STORMWATER DETENTION BASIN	24	72	2	13	26

NOTES:

ALL COLLARS SHALL BE INSTALLED SO AS TO BE WATERTIGHT.

COLLAR SIZE AND SPACING SHALL BE AS INDICATED WITHIN TABLE.

STANDARD CONSTRUCTION DETAIL #7-16
CONCRETE ANTI-SEEP COLLAR FOR PERMANENT BASINS OR TRAPS

NOT TO SCALE

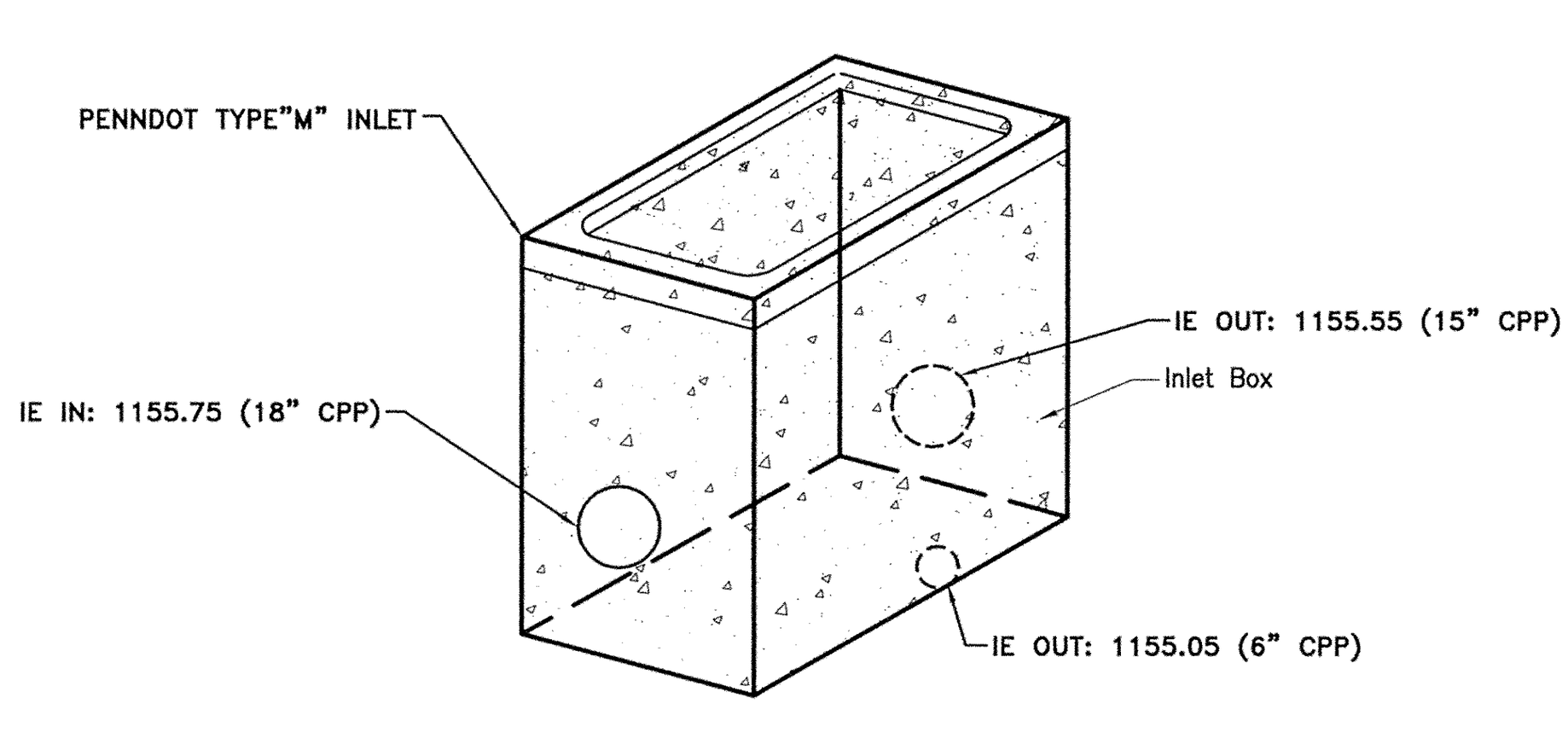

CATCH BASIN NO. 122

N. T. S.

POST CONSTRUCTION STORMWATER MANAGEMENT MAINTENANCE PLAN

The Post-Construction Stormwater Management Plan developed for the project is supplemented by this Maintenance Plan to help ensure continuing operation of all stormwater facilities. All of the stormwater facilities outside of the public right-of-way, and street sweeping, shall be owned and maintained by the Homeowner's Association.

The following is a list of items that shall be inspected and corrective action taken by the Owner:

1. Monitor accumulation of debris within structural BMPs and on impervious pavement.
2. Monitor the vegetation and soil media in the bio-filtration/rain gardens.
3. Monitor accumulated debris within the inlets and storm sewers.
4. Monitor accumulated debris on the paved roadways within the development.

The following actions will be taken by the Owner to help ensure the facilities shown on the plan and identified above are in working order:

1. Replace or repair facilities so as to function as intended.
2. Remove silt debris and trash in storm inlets/storm sewers monthly.
3. Remove accumulated silt and debris from the rain garden and sediment basin.
4. Disposal of collected silt, debris and trash in a manner which will not adversely affect the environment.
5. Mow detention basin as needed to maintain a vegetated height of 12".
6. Replace eroded material and re-vegetate eroded areas.
7. Street sweeping shall occur once a month during the period of March through October. The Homeowner's Association is responsible for street sweeping.
8. Monitor the condition of the bio-filtration/rain garden areas. Remove and replace the soil mix every three years as required.
9. Replace dead and dying plantings within the bio-filtration/rain garden areas yearly.
10. When ponding of water is observed in the infiltration basins, replace soil media as necessary to function as intended.

The inspection shall be undertaken by a minimum of two persons at least two times per year, on or before March 1st and October 1st, or after runoff events in excess of one inch of rainfall. Additional inspections will be required if it becomes apparent facilities are not functioning properly. Corrective actions will then be taken as required to help ensure continuing operation of post-construction stormwater facilities. Any deficiencies noted in items inspected by the Owner shall be documented and corrective actions taken by the Owner. Written records of each maintenance action are to be retained for a minimum of five years.

If the Owner fails to maintain the post-construction stormwater facilities, following due notice by Buffalo Township to correct the problems, Buffalo Township shall perform the necessary maintenance or corrective work. The Owner shall reimburse Buffalo Township for all costs. This recommended Maintenance Plan shall not be considered as a guarantee as to the adequacy of the post-construction stormwater management facilities in the future.

RECYCLING AND DISPOSAL OF MATERIALS

Individuals responsible for earth disturbance activities must ensure that proper mechanisms are in place to control waste materials. Construction wastes include, but are not limited to, excess soil materials, grass clippings, trash, etc. that could adversely impact water quality. Measures should be planned and implemented for housekeeping, materials management, and litter control. Wherever possible, recycling of excess materials is preferred, rather than disposal at an approved Pennsylvania Department of Environmental Protection waste site.

Excavated excess soil material disposed of offsite must be disposed of at a site with an approved Erosion and Sedimentation Control Plan or a PaDEP approved site. Imported fill material must be obtained from a site with an approved Erosion and Sedimentation Control Plan or a PaDEP approved borrow site. The contractor shall provide documentation of the status of all borrow and disposal sites prior to proceeding with the import or export of soil material on site.

PLAN BOOK	PAGE
365	7

COMMONWEALTH OF PENNSYLVANIA REGISTERED PROFESSIONAL JOHN R. HEYL ENGINEER NO. PE-080214

Scale: AS SHOWN

No.	Date	Description	By	No.	Date	Description	By	No.	Date	Description	By

Drawn By | Checked By | Approved By

Lennon, Smith, Souleret Engineering, Inc.
846 4th Avenue
Coraopolis, Pennsylvania 15108
Phone: 412-264-4400
Fax: 412-264-1200
email: info@lsse.com

Filename: M677NOT.dwg

Date: August 2017

John Allen Jr. Family Trust
P.O. Box 430
Saxonburg, Pennsylvania 16056

Twin Oaks
PRD No. 1
Situate In
Buffalo Township, Butler County, Pennsylvania

Sheet Title: Post Construction Stormwater Management Details

Drawing No. M677-01

Sheet No. 2 of 2

N:\PROJ\1000\1000-677\Dwg\M677NOT.dwg Layout=PCSM2 Post Construction Stormwater Management Details User=Kyleh Plotted=8/3/2017 1:12 PM

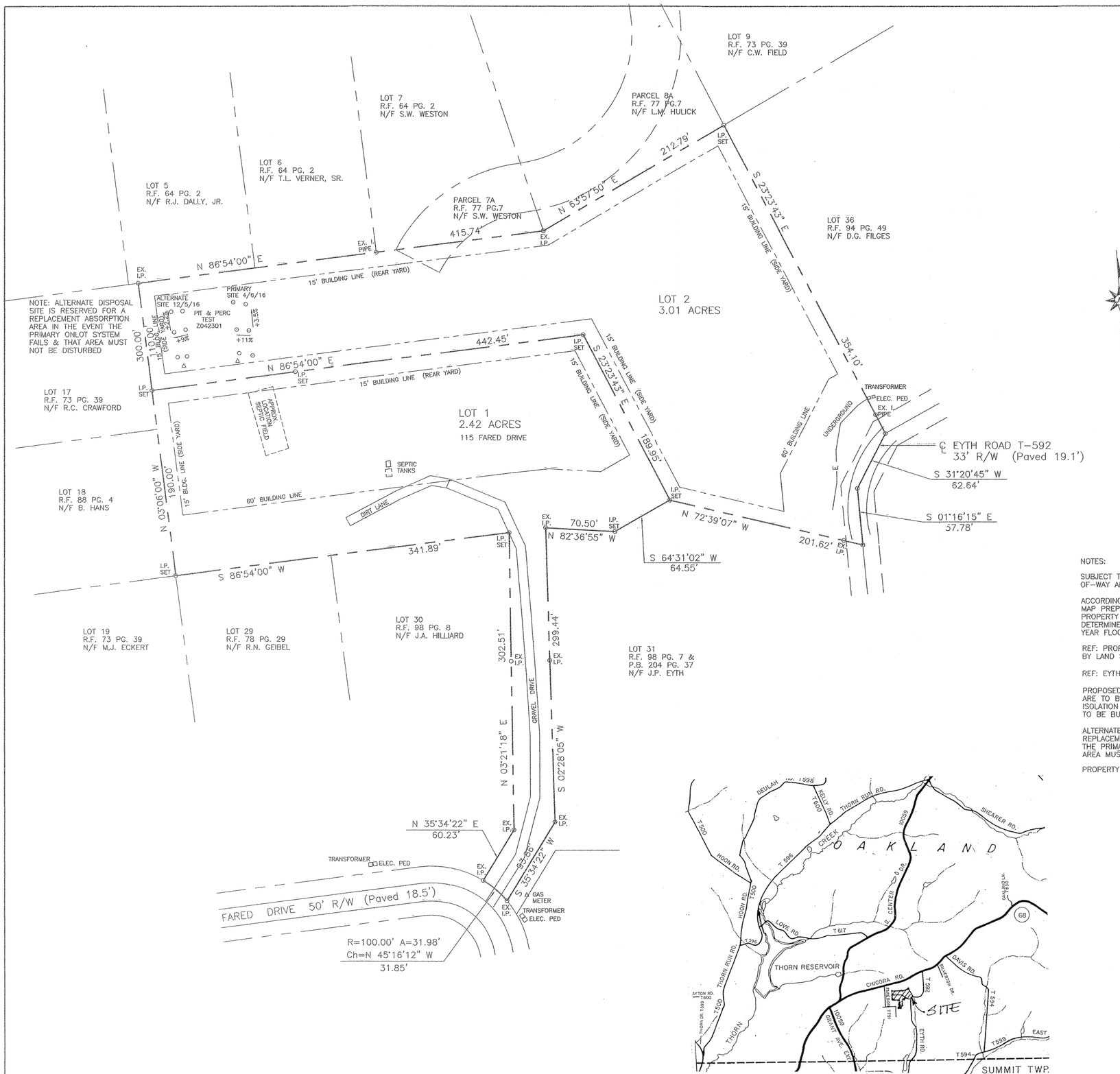

VICINITY MAP Scale: 1" = 2000'

NOTES:

SUBJECT TO ANY AND ALL EXISTING RIGHTS-OF-WAY AND EASEMENTS OF RECORD.

ACCORDING TO THE FLOOD INSURANCE RATE MAP PREPARED FOR THIS TOWNSHIP, THIS PROPERTY LIES IN ZONE C – AREAS DETERMINED TO BE OUTSIDE OF THE 500 YEAR FLOOD PLAIN.

REF: PROPERTY SURVEY FOR DENNIS R. BACHER BY LAND SURVEYORS, INC., #04-113.

REF: EYTH SUBDIVISION, P.B. 204 PG. 37.

PROPOSED WATER WELLS TO SERVE THESE LOTS ARE TO BE LOCATED OUTSIDE OF THE 100' ISOLATION DISTANCE FROM THE SEPTIC SYSTEMS TO BE BUILT.

ALTERNATE DISPOSAL SITE IS RESERVED FOR A REPLACEMENT ABSORPTION AREA IN THE EVENT THE PRIMARY ONLOT SYSTEM FAILS AND THAT AREA MUST NOT BE DISTURBED.

PROPERTY OWNERS: JAMES T. & MELISSA A. MAHOOD
2238 CHICORA ROAD
CHICORA, PA 16025

COMMONWEALTH OF PENNSYLVANIA
NOTARIAL SEAL
ROBERT JOHN WHITE
Notary Public
BUTLER TWP., BUTLER COUNTY
My Commission Expires Sep 12, 2018

COMMONWEALTH OF PENNSYLVANIA
REGISTERED
PROFESSIONAL
Cheryl A. Hughes
LAND SURVEYOR
SU-32490-E
PENNSYLVANIA

KNOW ALL MEN BY THESE PRESENTS, that we, James Tyler Mahood and Melissa A. Mahood, of the Township of Oakland, of the County of Butler, Commonwealth of Pennsylvania, for ourselves, our heirs, executors, administrators and assigns, do hereby adopt this plan as our Plan of Lots of our property, situate in Oakland Township, Butler County, Pennsylvania, and for divers advantages accruing to us, do hereby dedicate forever, for public use for highway purposes all slope areas and all drives, roads, streets, lanes, ways and other public highways shown upon the plan, with the same force and effect as if the same had been opened through legal proceedings, and in consideration of the approval of said plan, and any future acceptance of said public highways by the said Commonwealth of Pennsylvania, County of Butler and Township of Oakland, we hereby covenant and agree to and by these presents do release and forever discharge said Commonwealth of Pennsylvania, County of Butler and Township of Oakland, their successors or assigns from any liability for damages arising and to arise from any appropriation of said ground for public highways and the physical grading thereof to any grades that may be established hereafter at any time. This dedication and release shall be binding upon James Tyler Mahood and Melissa A. Mahood, our heirs, executors, administrators and assigns and purchasers of lots in this plan.

IN WITNESS WHEREOF, we hereunto set our hands and seals this 26 day of June, 20 17.

ATTEST:

NOTARY PUBLIC OWNER Melissa A. Mahood OWNER

COMMONWEALTH OF PENNSYLVANIA)SS:
COUNTY OF BUTLER

Before me, the subscriber, a Notary Public in and for said Commonwealth and County, personally appeared the above named James Tyler Mahood and Melissa A. Mahood, and acknowledged the foregoing release and dedication and plan to be their act and deed and desired the same to be recorded as such.

Sworn to and subscribed before me this day.

WITNESS MY HAND AND NOTARIAL SEAL this 26 day of June, 20 17.

My Commission expires the 24 day of Feb, 20 18.

SEAL

NOTARY PUBLIC

COMMONWEALTH OF PENNSYLVANIA
NOTARIAL SEAL
Jarah Roxberry, Notary Public
Lyndora PA, Butler County
My Commission Expires February 24, 2018

I, Cheryl A. Hughes, a Registered Professional Land Surveyor of the Commonwealth of Pennsylvania, do hereby certify that this plan as shown hereon is based upon actual field survey of the land described and that all angles, distances and courses are correctly shown, that the monuments and markers have been set as shown on the plan, and that this plan represents the lots, lands, streets and highways as surveyed and plotted by me for the owners or agents.

DATE June 7, 2017 SEAL REG. NO. SU-32490-E

The Board of Supervisors of the Township of Oakland hereby gives public notice that in approving this plan for recording purposes only, the Township of Oakland assumes no obligation, legal or otherwise, expressed or implied, either to accept said streets as Township streets or roads or grade, pave and curb the streets in said plan, or to construct sewers therein or to install any other such service ordinarily installed in Township streets or roads.

SECRETARY SEAL CHAIRMAN/ PRESIDENT

Approved by the Supervisors of the Township of Oakland this 2nd day of August, 20 17.

SECRETARY SEAL CHAIRMAN/PRESIDENT

Approved by the Oakland Township Planning Commission this 13th day of June, 20 17.

SECRETARY SEAL CHAIRMAN/PRESIDENT

Reviewed by the Butler County Planning Commission this 19th day of May, 20 17.

SECRETARY SEAL CHAIRMAN/PRESIDENT

BUTLER COUNTY PLANNING COMMISSION

COMMONWEALTH OF PENNSYLVANIA)SS:
COUNTY OF BUTLER)

Recorded in the Recorder's Office for the recording of deeds, plans, etc. in said County in Plan Book Volume 365 page 8.

Given under my hand and seal this 16 day of August, 20 17.

SEAL

RECORDER

MICHELE M. MUSTELLO
RECORDER OF DEEDS
My Commission Expires First Monday in January 2020

Instr: 201708160017416 08/16/2017
Pages: 1 F:$45.00 2:46PM
Michele Mustello T20170012447
Butler County Recorder PL

RECORDER OF DEEDS BUTLER COUNTY, PA

REVISED: 06/07/17; ENGINEER'S REVIEW COMMENTS

PLAN BOOK	PAGE
365	8

Land Surveyors, Inc.
523 North Main Street
P.O. Box 1061
Butler, PA 16003-1061
(724) 287-6865
Cheryl A. Hughes, PLS Owner

PLAN OF SUBDIVISION
FOR: JAMES TYLER MAHOOD
and
MELISSA A. MAHOOD
SITUATE: OAKLAND TWP., BUTLER CO., PA

Date 04/21/17	Scale 1" = 50'	Dwn By BEC	Ckd By CAH
Parcel No. 250-S3-A37		Instrument # 201704040006931	Service No. 17-005
Address 115 FARED DRIVE			

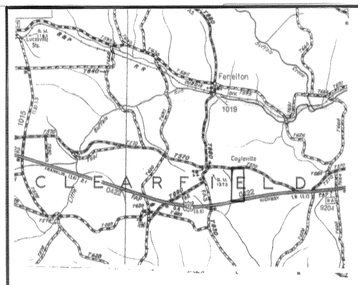
Fernilton
1018
Claysville
CLEARFIELD
Cleveland Run
Rocky Run
Rocky Run
Rocky

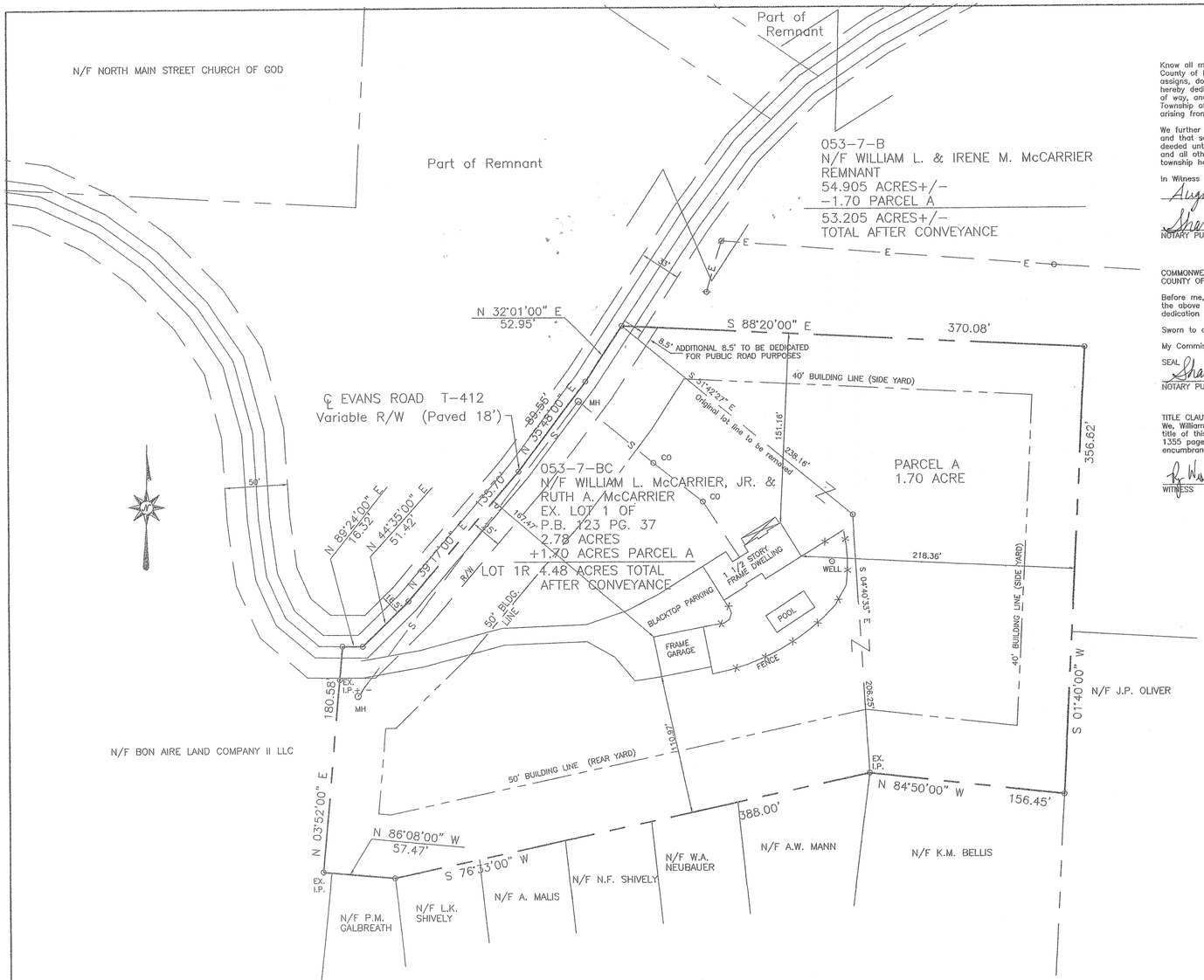

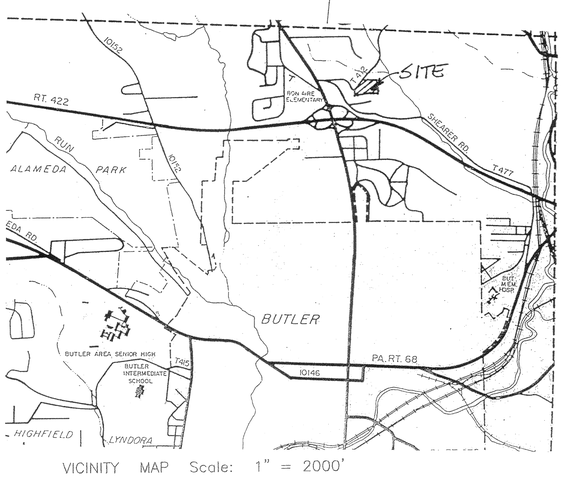

VICINITY MAP Scale: 1" = 2000'

0' 50' 100' 150'

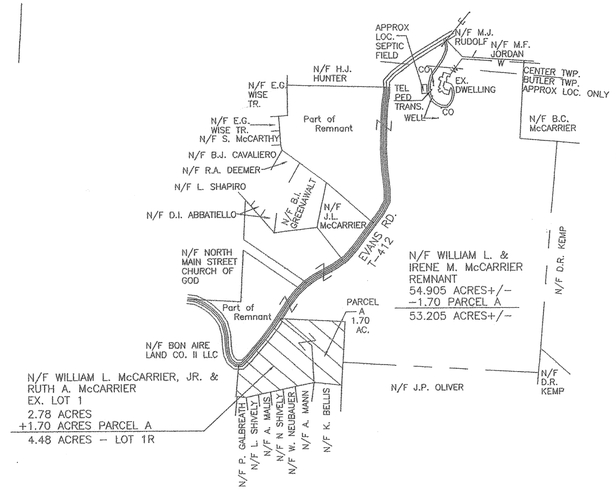

LOCATION MAP Scale: 1" = 400'

Know all men by these Presents, that we, William L. and Irene M. McCarrier, of the Township of Butler, County of Butler and State of Pennsylvania, for ourselves, our heirs, executors, administrators and assigns, do hereby adopt this Plan as our Plan of our property situated in Butler Township and do hereby dedicate forever for public use for highway and utility purposes, all drives, roads, lanes, ways, rights of way, and other public highways shown upon the plan, and we release, remise and discharge the Township of Butler, its successors or assigns, of and from all liability, courses of action, claims or damages arising from or pertaining to in any manner said roads and rights of ways.

We further agree that said plan is approved by the Township of Butler for "Planning Purposes Only" and that said township shall not issue any "Building Permits" for lots contained herein, nor shall any lots be deeded until either all of said roads and improvements in accordance with Butler Township Ordinance 730 and all other applicable ordinances have been completed and accepted by said township or until the township has approved a bond with sufficient surety to guarantee construction of the same.

In Witness Whereof, we hereunto set our hands and seals this 8th day of August, 2017

Sharon M. Higgins — NOTARY PUBLIC

Irene M. McCarrier — OWNER

COMMONWEALTH OF PENNSYLVANIA
NOTARIAL SEAL
Sharon M. Higgins, Notary Public
Cranberry Twp., Butler County
My Commission Expires March 22, 2020
MEMBER, PENNSYLVANIA ASSOCIATION OF NOTARIES

COMMONWEALTH OF PENNSYLVANIA)SS:
COUNTY OF BUTLER)

Before me, the subscriber, a Notary Public in and for said Commonwealth and County, personally appeared the above named William L. and Irene M. McCarrier, and acknowledged the foregoing release and dedication and plan to be their act and deed and desired the same to be recorded as such.

Sworn to and subscribed before me this 8th day of August, 2017

My Commission Expires the 22 day of March, 2020

SEAL

Sharon M. Higgins — NOTARY PUBLIC

COMMONWEALTH OF PENNSYLVANIA
NOTARIAL SEAL
Sharon M. Higgins, Notary Public
Cranberry Twp., Butler County
My Commission Expires March 22, 2020
MEMBER, PENNSYLVANIA ASSOCIATION OF NOTARIES

TITLE CLAUSE (NO MORTGAGE)
We, William L. and Irene M. McCarrier, owners of this plan of subdivision in our names, do hereby certify that the title of this property is in the names of William L. and Irene M. McCarrier as recorded in Deed Book Volume 1355 page 763, Recorder of Deeds Office. We further certify that there is no mortgage, lien or encumbrance against this property.

WITNESS — OWNER — OWNER

NOTES:

SUBJECT TO ANY AND ALL EXISTING RIGHTS-OF-WAY AND EASEMENTS OF RECORD.

ACCORDING TO THE FLOOD INSURANCE RATE MAP PREPARED FOR THIS TOWNSHIP, THIS PROPERTY LIES IN ZONE C - AREAS OF MINIMAL FLOODING.

ZONING: A-1

40' FRONT YARD SETBACK
40' SIDE YARD SETBACK
50' REAR YARD SETBACK
MIN. LOT AREA: 2 ACRES
MIN. LOT WIDTH: 200'

PROPERTY OWNERS: WILLIAM L. McCARRIER, JR.
RUTH A McCARRIER
155 EVANS ROAD
BUTLER, PA 16001

WILLIAM L. & IRENE M. McCARRIER
175 EVANS ROAD
BUTLER, PA 16001

REF: PLAN OF SUBDIVISION FOR WILLIAM L. & IRENE M. McCARRIER BY ZARNICK & SEYBERT, INC., #87-269, P.B. 123 PG. 37.

REF: LOT LINE REVISION FOR WILLIAM L. & IRENE M. McCARRIER BY LAND SURVEYORS, INC., #05-127, P.B. 297 PG. 37.

THE PURPOSE OF THIS PLAN IS TO ADD PARCEL A TO ADJOINING EXISTING LOT 1 BY A LOT LINE REVISION.

COMMONWEALTH OF REGISTERED PROFESSIONAL Cheryl A. Hughes LAND SURVEYOR SU-32490-E PENNSYLVANIA

Know all men by these Presents, that we, William L. McCarrier, Jr. and Ruth A. McCarrier, of the Township of Butler, County of Butler and State of Pennsylvania, for ourselves, our heirs, executors, administrators and assigns, do hereby adopt this Plan as our Plan of our property situated in Butler Township and do hereby dedicate forever for public use for highway and utility purposes, all drives, roads, lanes, ways, rights of way, and other public highways shown upon the plan, and we release, remise and discharge the Township of Butler, its successors or assigns, of and from all liability, courses of action, claims or damages arising from or pertaining to in any manner said roads and rights of ways.

We further agree that said plan is approved by the Township of Butler for "Planning Purposes Only" and that said township shall not issue any "Building Permits" for lots contained herein, nor shall any lots be deeded until either all of said roads and improvements in accordance with Butler Township Ordinance 730 and all other applicable ordinances have been completed and accepted by said township or until the township has approved a bond with sufficient surety to guarantee construction of the same.

In Witness Whereof, we hereunto set our hands and seals this 21st day of July, 2017

Paula J. Riggs — NOTARY PUBLIC

William L. McCarrier, Jr. — OWNER

Ruth A. McCarrier — OWNER

COMMONWEALTH OF PENNSYLVANIA)SS:
COUNTY OF BUTLER)

Before me, the subscriber, a Notary Public in and for said Commonwealth and County, personally appeared the above named William L. McCarrier, Jr. and Ruth A. McCarrier, and acknowledged the foregoing release and dedication and plan to be their act and deed and desired the same to be recorded as such.

Sworn to and subscribed before me this 21st day of July, 2017

My Commission Expires the 6th day of June, 2021

SEAL

Paula J. Riggs — NOTARY PUBLIC

COMMONWEALTH OF PENNSYLVANIA
NOTARIAL SEAL
Paula J. Riggs, Notary Public
Center Twp., Butler County
My Commission Expires June 6, 2021
MEMBER, PENNSYLVANIA ASSOCIATION OF NOTARIES

TITLE CLAUSE (NO MORTGAGE)
We, William L. McCarrier, Jr. and Ruth A. McCarrier, owners of this plan of subdivision in our names, do hereby certify that the title of this property is in the names of William L. McCarrier, Jr. and Ruth A. McCarrier as recorded in Deed Book Volume 1394 page 854, Recorder of Deeds Office. We further certify that there is no mortgage, lien or encumbrance against this property.

WITNESS — William L. McCarrier, Jr. OWNER — Ruth A. McCarrier OWNER

I, Cheryl A. Hughes, a Registered Surveyor of the Commonwealth of Pennsylvania, do hereby certify that the plan as shown hereon is based upon actual field survey of the land described and that all angles, distances and courses are correctly shown, that the monuments and markers have been set as shown on the plat, and that this plan correctly represents the lots, land, streets and highways as surveyed and plotted by me for the owners or agents.

DATE July 6 2017 SEAL SIGNATURE AND REG. NO. SU-32490-E

The Board of Commissioners of the Township of Butler hereby gives public notice that in approving this plan for recording purposes only, the Township assumes no obligations, legal or otherwise, expressed or implied, either to accept said streets as Township streets or roads, or to grade, pave and curb the streets in said plan, or to construct sewers therein or to install any other such service ordinarily installed in Township streets or roads.

Theresa Diesler — SECRETARY — SEAL — PRESIDENT

Approved by the Board of Commissioners of the Township of Butler this 17th day of July, 2017

Theresa Diesler — SECRETARY — SEAL — PRESIDENT OF BOARD

Approved by the Butler Township Planning Commission this 11th day of July, 2017

Ernest R. Osterling — SECRETARY — SEAL — Vice-CHAIRMAN

BUTLER TOWNSHIP PLANNING COMMISSION

Reviewed by the Butler County Planning Commission this 19th day of JUNE, 2017

SECRETARY — SEAL — CHAIRMAN

COMMONWEALTH OF PENNSYLVANIA)SS:
COUNTY OF BUTLER)

Instr: 201708170017524 08/17/2017
Pages: 1 $ 645.00 1:12pm
Michele Mustello T20170017524
Butler County Recorder ND

Recorded in the Recorder's Office for the recording of deeds, plans, etc., in said County in Plan Book Volume 365 page 10.

Given under my hand and seal this 17th day of August, 2017.

SEAL

Michele M. Mustello

MICHELE M. MUSTELLO
RECORDER OF DEEDS
My Commission Expires First Monday in January 2020

REVISED 07/06/17; ENGINEER'S REVIEW COMMENTS

L L J	Land Surveyors, Inc. 523 North Main Street P.O. Box 1061 Butler, PA 16003-1061 (724) 287-6865 Cheryl A. Hughes, PLS Owner

LOT LINE REVISION
FOR: WILLIAM L. & IRENE M. McCARRIER
and
WILLIAM L. McCARRIER, JR. & RUTH A. McCARRIER
SITUATE: BUTLER TWP., BUTLER CO., PA

Date 06/12/17	Scale 1" = 50'	Dwn By BEC	Ckd By CAH
Parcel No. 530-7-B, BC		Db-Pg 1355-763, 1394-854	Service No. 17-070
Address 155/175 EVANS ROAD			

PLAN BOOK	PAGE
365	10

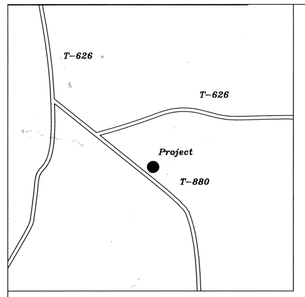

Location Map

- Corner
- Set Iron Pin
- Found Iron Pin

CURVE	RADIUS	ARC LENGTH	CHORD LENGTH	CHORD BEARING
C1	80.00'	127.95'	114.74	N 47°25'56" E

BUTLER COUNTY PENNSYLVANIA
Recorded in the Recorder's office of the said County on this 18 day of April 20 17
to PLAN BOOK No. 365 page 11
Witness my hand and the seal of said office.
RECORDER
MICHELE M. MUSTELLO
RECORDER OF DEEDS
My Commission Expires First Monday in January 2020

Instr: 201708190017553 08/18/2017
Pages: 1 F:$45.00 10:03AM
Michele Mustello T20170012586
Butler County Recorder FL

RECORDER'S CERTIFICATE
COMMONWEALTH OF PENNSYLVANIA
COUNTY OF BUTLER

On this the _____ day of _____, 2017 before me, the Recorder of Deeds in and for said County of Butler, personally appeared _____ who in due form acknowledged the within plat to be their act and deed and desire the same to be recorded as such in witness thereof, I hereunto set my hand and seal.

Recorder of Deeds

We, the undersigned Philip E. & Sherry L. Geibel (owners) of the Real Estate shown and described here in do hereby certify that I have laid off, platted and subdivided, and hereby lay off, plat, and sub-divide said Real Estate in accordance with the within plat.

Philip E. Geibel *Sherry L. Geibel*

COMMONWEALTH OF PENNSYLVANIA
COUNTY OF BUTLER SS

On this 5 day of May 2017 Before me a Notary Public in and for said state and county personally came Philip E. Geibel known to be the person whose name is subscribed to the within instrument.

In witness wherof I have here unto set my name and offical

Notary Public

COMMONWEALTH OF PENNSYLVANIA
NOTARIAL SEAL
Kathleen A. Rasely, Notary Public
Summit Twp., Butler County
My Commission Expires Aug. 9, 2020
MEMBER, PENNSYLVANIA ASSOCIATION OF NOTARIES

Final approval by the Clearfield Twp. Planning Commission this 1st day of May, 2017

Chairmdn *Secretary*

Reapproved
Final approval by the Clearfield Twp. Supervisors this 8th day of May, 2017
Chairman *Secretary*

Final approval by the Butler County Planning Commission this 17th day of MAY, 2017
Chairman *Secretary*

BUTLER COUNTY PLANNING COMMISSION

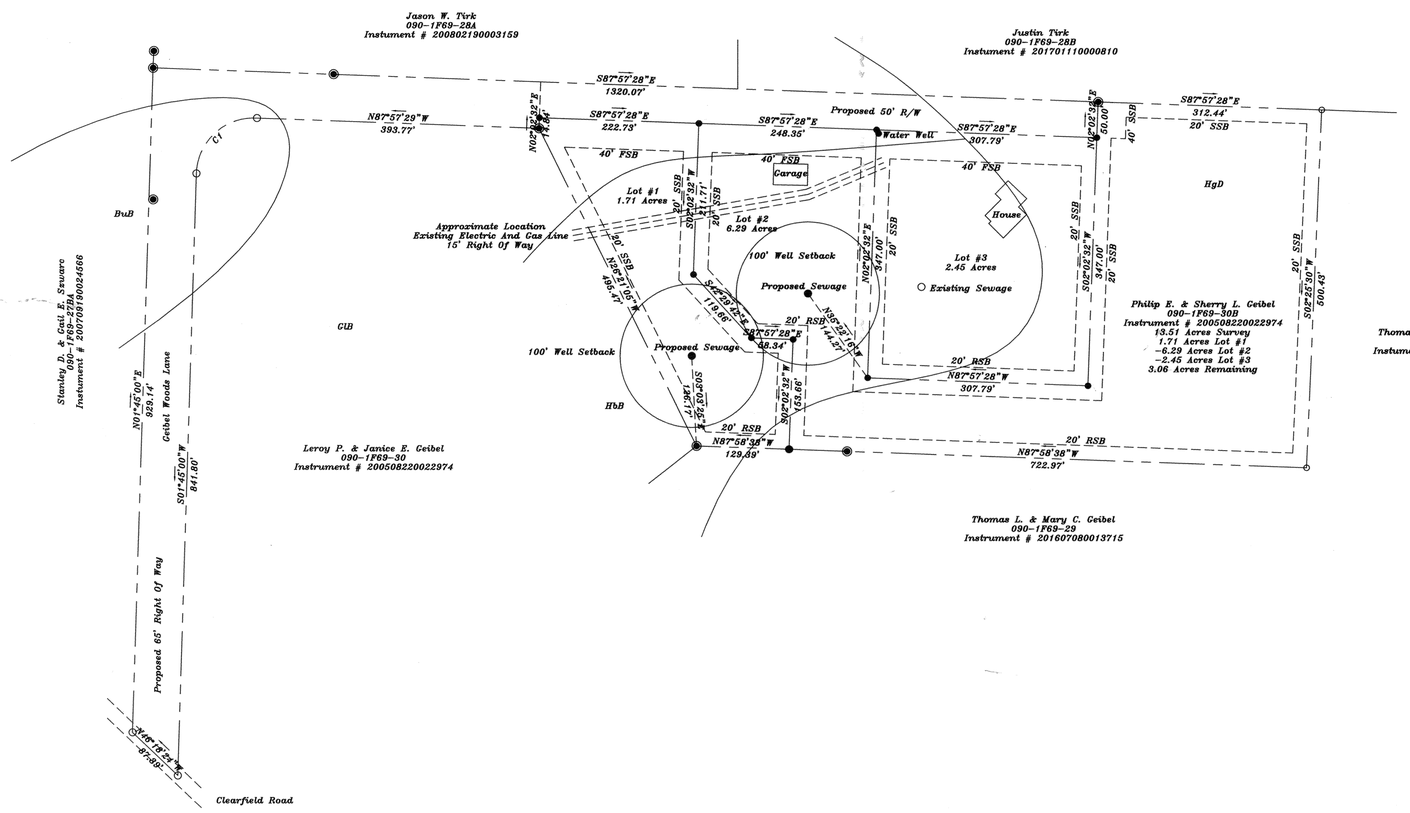

Note: The Location Of All Water Supplies, Test Pits, Percolation Holes Proposed Or Existing Are Only Shown On This Map In An Approximate Location. They Were Not Located By A Survey In The Field. The Slope Shown On This Plan Was From The SEO And Not From Measurements In The Field.

GRAPHIC SCALE
100 0 50 100 200 400
(IN FEET)
1 inch = 100 ft.

MAINTENANCE AND R/W AGREEMENT

THIS AGREEMENT made this 18th day of April, 2017 by and between Philip E. Geibel and Sherry L. Geibel hereinafter referred to as seller, and future users of the proposed 50' right of way, hereinafter referred to as purchaser.

WITNESS: WHEREAS the seller have agreed to convey a right-of-way (ROW) thereto purchasers, situate in Clearfield Township, Butler County, PA.

WHEREAS, the parties wish to equitably allocate the duty of maintaining said right-of-way: and

WHEREAS, the Clearfiel Township Planning Commission has conditioned approval of the said conveyance on the parties' execution of a written agreement to run with the land for the maintenance of said right-of-way.

NOW THEREFORE in consideration of the sum of one and 00/100...($1.00) dollar each to the other in hand paid receipt whereof is hereby acknowledged the parties agree as follows:

Seller shall convey a 50' wide right-of-way to the purchaser's property. The right-of-way is more accurately described in a survey map prepared by Harry L. Breski, PLS a copy, which is attached and incorporated by reference in this agreement.
Purchaser And Sellor shall bear costs equally to maintain and repair the said right-of-way a passable condition.

THIS AGREEMENT, and the covenants herein shall run with, burden and benefit the contiguous lands of the sellers and purchasers, and the heirs, assignees, and successors in interest of both parties.

IN WITNESS WHEREOF, the parties hereto intending to be legally bound have set their hand and seals the day and year first above written.

Witness *Philip E. Geibel*

Witness *Sherry L. Geibel*

PLAN BOOK	PAGE
365	11

I, Harry L. Breski, a Professional Land Surveyor, registered by the Commonwealth of Pennsylvania, do hereby certify that the plan as shown hereon is based upon actual field survey of the land described and that all angles, distances and courses are correctly shown, that the monuments and markers have been set as shown on the plat, and that this plan correctly represents the lots, land streets and highways as surveyed and plotted by me for the owners or agents

Date

COMMONWEALTH OF PENNSYLVANIA REGISTERED PROFESSIONAL HARRY L. BRESKI LAND SURVEYOR SU-033608-E

Harry L. Breski, PLS
#SU-033608-E

DRAWN BY: HLB	APPROVED BY:	REVISIONS
DATE: 4-19-17	PROJ. NO.	
Scale: 1"=100'	DWG.	

Geibel Plan #3
Philip E. & Sherry L. Geibel - Owners
Clearfield Township
Butler Co., PA

Breski Surveying
Harry L. Breski, PLS R.D. #1 Box 48-B Worthington, PA 16262 Phone: (724) 859-3947

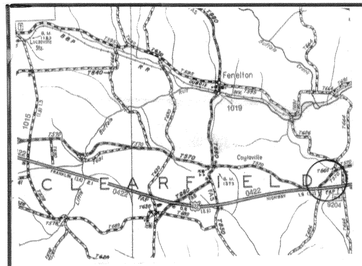

LOCATION MAP
1" = 2000'

1 800 DIG FOR ENGINEERING ONLY
SN 20172212604

ZONE : AG

SET BACKS

F 40

S 20

R 20

NOT IN FLOOD PLAIN

NO WETLANDS

Notice that a Highway Occupancy Permit is required Pursuant to Section 420 of the Act of June 1, 1945. (P.L.1242. No. 428), known as the "State Highway Law."

Instr:201708210017644 08/21/2017 11:16AM
Pages: 1 F:$45.00 T20170012034
Michele Mustello FL
Butler County Recorder

I, (we) the undersigned, RICHARD ASHE ROSE MARY ASHE the owner(s) of the real estate shown and described herein, do hereby certify that I have layed off, platted and subdivided, and hereby lay off, plat and subdivide said real estate in accordance with this plat. This subdivision shall be known as the _____ Subdivision. All streets and alleys shown not heretofore dedicated to the public are hereby dedicated to the public. The building setback lines are hereby established as shown on this plat, between which lines and the right-of-way lines of the street, there shall be erected or maintained no building or structure.

Witness my hand and seal this 4 day of AUG 20 17

Richard Ashe Rose Mary Ashe

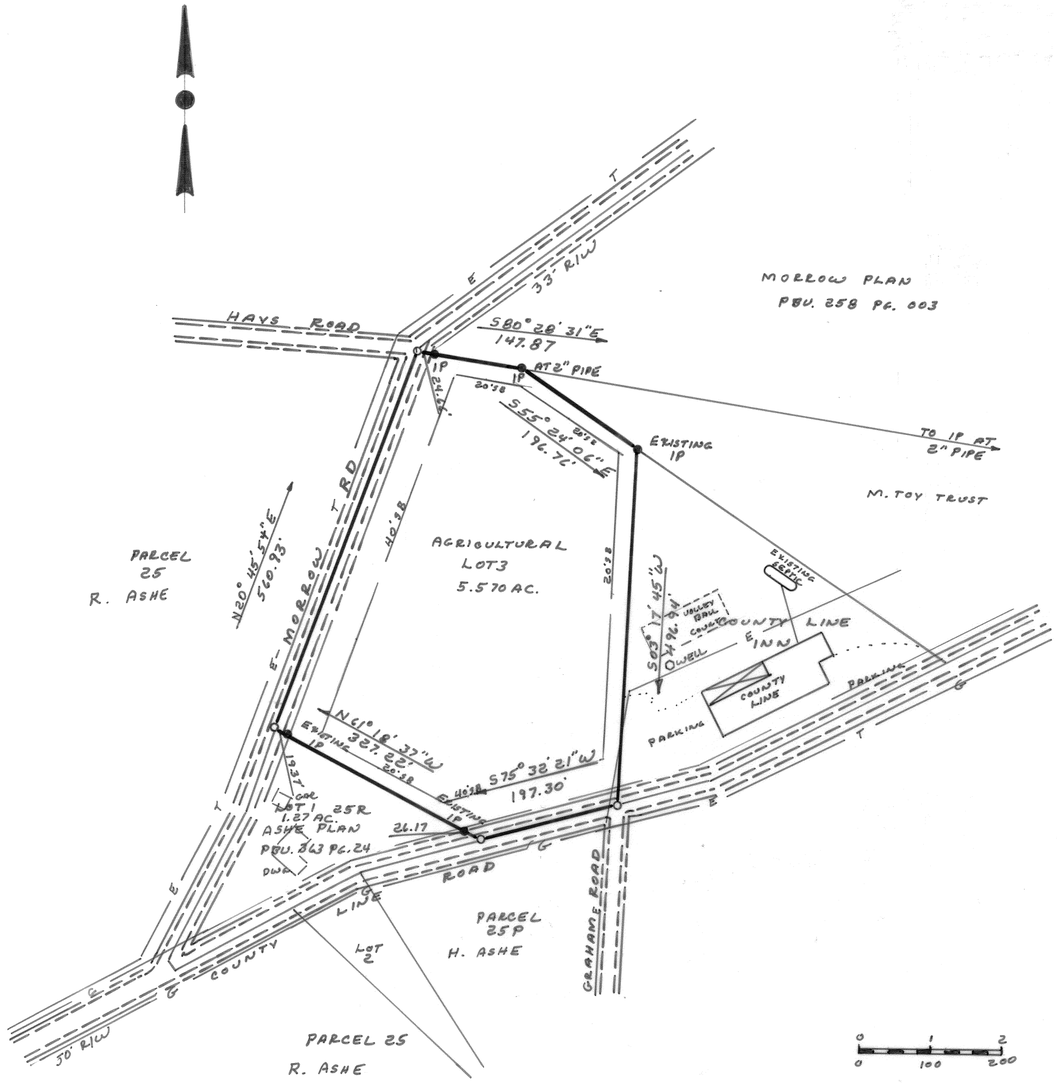

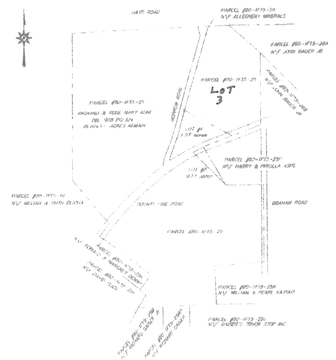

PROPERTY MAP
NTS

"As of the date of this deed/plot plan recording, the property/subdivision described herein is and shall be dedicated for the express purpose of PARKING LOT / RESTAURANT / BAR use. No portion (or lot number(s) LOT 3) of this property/subdivision are approved by CLEARFIELD (Municipality) or the Department of Environmental Protection (DEP) for the installation of any sewage disposal facility. No permit will be issued for the installation, construction, connection to or use of any sewage collection, conveyance, treatment or disposal system (except for repairs to existing systems) unless the municipality and DEP have both approved sewage facilities planning for the property/subdivision described herein in accordance with the Pennsylvania Sewage Facilities Act (35 P.S. §750.1 *et seq.*) (Act) and regulations promulgated thereunder. Prior to signing, executing, implementing or recording any sales contract or subdivision plan, any purchaser or subdivider of any portion of this property should contact appropriate officials of CLEARFIELD (municipality), who are charged with administering the Act to determine the form of sewage facilities planning required and the procedure and requirements for obtaining appropriate permits or approvals."

I, CARL L. WAUGAMAN P.E., P.L.S., a Professional Land Surveyor of the Commonwealth of Pennsylvania, do hereby certify that this plan shown hereon is based upon actual field survey of the land described and that all angles, distances, and courses are correctly shown, that the monuments and markers as shown on the plat have been, or will be set, and to the best of my knowledge, that this plan correctly represents the lots, lands, streets, and highways as surveyed and plotted by me for the owners or agents.

CARL L. WAUGAMAN P.E., P.L.S.
Civil Engineer & Professional Land Surveyor
P.O. BOX 69 / WORTHINGTON, PA. 16262-0069
PE 035343E SU 000471A
724-297-5303

SEAL

(Date) 7-27-17

7-27-17

COMMONWEALTH OF PENNSYLVANIA:
County of Butler:

Before me, the subscriber, a Notary Public in and for said State and County, Personally came Richard Ashe Rose Mary Ashe and acknowledged the foregoing release and dedication and plan to be (her/his/their) act and deed and desired the same to be recorded as such.

WITNESS MY HAND AND NOTARY SEAL
This 4 day of AUGUST, 2017

My commission expires the 6 day of SEPTEMBER A.D., 20 20

Notary Public signature Kathryn Burns

SEAL

COMMONWEALTH OF PENNSYLVANIA
NOTARIAL SEAL
Kathryn Burns, Notary Public
Butler Twp., Butler County
My Commission Expires Sept. 6, 2020
MEMBER, PENNSYLVANIA ASSOCIATION OF NOTARIES

Approved by the Planning Commission of CLEARFIELD TWP. this 7TH day of August, 2017.

(Secretary) (Chairman)

SEAL

Reviewed and approved (or Reviewed with comments) by the Supervisors of this 14TH day of August, 20 17.

(Secretary) (Chairman)

SEAL

Reviewed with comments by the Butler County Planning Commission this 15TH day of AUG, 20 17.

(Secretary) (Chairman)

See Comments On File at the Butler County Planning Commission

Plan Number: 17206

SEAL

BUTLER COUNTY PLANNING COMMISSION

COMMONWEALTH OF PENNSYLVANIA }
} SS:
County of Butler: }

Recorded in the office for the recording of deeds, plats, ect. in said County, in Plan Book Volume 365 Page(s) 12 and/or instrument number.
Given under my hand and seal this 21 day of AUG. 20 17.

Michele M. Mustello (Seal)

MICHELE M. MUSTELLO
RECORDER OF DEEDS
My Commission Expires First Monday in January 2020

RECORDER OF DEEDS BUTLER COUNTY PA

PLAN BOOK	PAGE
365	12

ASHE PLAN 2

RICHARD & ROSE MARY ASHE

201 COUNTY LINE RD., FENELTON PA 16034

CLEARFIELD TWP	BUTLER CO. PA
DBU. 906 PG. 324	MAP 90-1F-15-25

PROPERTY SURVEYS • SUBDIVISIONS • MINING • HYDRAULIC SEWAGE DESIGN • DER PERMIT PREP

CARL L. WAUGAMAN P.E., P.L.S.
Civil Engineer & Professional Land Surveyor
P.O. BOX 69 / WORTHINGTON, PA. 16262-0069

DATE: 7-27-17	SCALE: 1" = 100'
REV.	REV.

PTV XX, LLC
PORTERSVILLE DOLLAR GENERAL STORE

MUDDY CREEK TOWNSHIP, BUTLER COUNTY, PENNSYLVANIA

FINAL LAND DEVELOPMENT PLAN SET

Instr:201708220017806 08/22/2017
Pages:21 F:$945.00 1:SSPN
Michele Mustello T20170012724
Butler County Recorder FL

NOTES:

1. THE CONTRACTOR AND SUBCONTRACTORS SHALL BE RESPONSIBLE FOR COMPLYING WITH APPLICABLE FEDERAL, STATE AND LOCAL REQUIREMENTS, TOGETHER WITH EXERCISING PRECAUTIONS AT ALL TIMES FOR THE PROTECTION OF PERSONS (INCLUDING EMPLOYEES) AND PROPERTY. IT IS THE SOLE RESPONSIBILITY OF THE CONTRACTOR AND SUBCONTRACTORS TO INITIATE, MAINTAIN AND SUPERVISE ALL SAFETY REQUIREMENTS, PRECAUTIONS AND PROGRAMS IN CONNECTION WITH THE WORK.
2. THE CONTRACTOR SHALL INDEMNIFY AND HOLD HARMLESS THE OWNER, OWNER'S REPRESENTATIVE, AND ENGINEER FOR ANY AND ALL INJURIES AND/OR DAMAGES TO PERSONNEL, EQUIPMENT AND/OR EXISTING FACILITIES OCCURRING IN THE COURSE OF THE CONSTRUCTION DESCRIBED IN THE PLANS AND SPECIFICATIONS.
3. CONTRACTOR SHALL REFER TO OTHER PLANS WITHIN THIS CONSTRUCTION SET FOR OTHER PERTINENT INFORMATION. IT IS NOT THE ENGINEER'S INTENT THAT ANY SINGLE PLAN SHEET IN THIS SET OF DOCUMENTS FULLY DEPICT ALL WORK ASSOCIATED WITH THE PROJECT.
4. THE IMPROVEMENT AND MAINTENANCE OF ANY PRIVATE ACCESS DRIVE SHALL BE THE SOLE RESPONSIBILITY OF THOSE PERSONS BENEFITING FROM THE USE THEREOF.
5. THE DEVELOPER AND/OR THE LOT PURCHASER(S) ASSUMES FULL RESPONSIBILITY FOR OBTAINING ANY LOCAL, STATE, AND FEDERAL PERMITS AND/OR APPROVALS, RELATING TO WETLAND IMPACTS.

NORTH

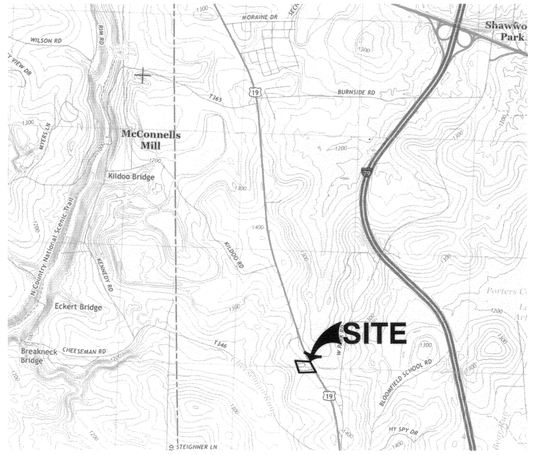

VICINITY MAP

SCALE IN FEET
0 2000 4000

REFERENCE

1. U.S.G.S. 7.5' TOPOGRAPHIC MAP, PORTERSVILLE QUADRANGLE, PA DATED 2016.

LIST OF DRAWINGS

SHEET NUMBER	SHEET TITLE
C000	COVER SHEET
C001	PROJECT NOTES
C002	CERTIFICATION SHEET
C100	OVERALL EXISTING CONDITIONS
C101	EXISTING CONDITIONS AND DEMOLITION PLAN
C200	OVERALL SITE LAYOUT PLAN
C201	SITE LAYOUT PLAN
C300	GRADING AND POST-CONSTRUCTION STORMWATER MANAGEMENT PLAN
C301	POST-CONSTRUCTION STORMWATER MANAGEMENT NOTES
C500	SITE UTILITY PLAN
C700	LANDSCAPE PLAN
C701	LANDSCAPE NOTES AND DETAILS
C800	SITE CONSTRUCTION DETAILS
C801	SITE CONSTRUCTION DETAILS
C802	SITE CONSTRUCTION DETAILS
C803	SITE CONSTRUCTION DETAILS
C804	SITE CONSTRUCTION DETAILS
C900	EROSION AND SEDIMENTATION CONTROL PLAN
C901	EROSION AND SEDIMENTATION CONTROL NOTES
C902	EROSION AND SEDIMENTATION CONTROL DETAILS
C903	EROSION AND SEDIMENTATION CONTROL DETAILS
SUPPLEMENTAL DRAWINGS PREPARED BY CIVIL & ENVIRONMENTAL CONSULTANTS, INC.	
SU-1	ALTA/NSPS LAND TITLE SURVEY
SUPPLEMENTAL DRAWINGS PREPARED BY ANDRASKO AND ASSOCIATES, INC.	
1	SEWAGE SYSTEM PLOT PLAN
2	HYDRAULIC PROFILE, DRIP & ZONE DETAILS
3	CONTROL PANEL, COOL GUIDE & PUMP CURVE DETAILS
4	PRODUCT AVAILABILITY AND CONSTRUCTION NOTES
5	MOUND DIMENSIONS
6	HYDRAULIC UNIT, FLUSH RETURN ASSEMBLY, AND TUBE INSTALLATION DETAILS
7	CALCULATION SHEET
8	GENERAL INSTRUCTIONS, COLD WEATHER INSTALLATION, & SITE CLEARING NOTES

UTILITY COMPANIES

TELECOMMUNICATIONS SERVICE

ARMSTRONG
CONTACT: TBD
PHONE: TBD

GAS SERVICE

PEOPLES NATURAL GAS LLC/PEOPLES TWP LLC
CONTACT: SHARON VERNICK
PHONE: 412-335-4096

ELECTRIC SERVICE

WEST PENN POWER
CONTACT: TBD
PHONE: TBD

SANITARY SERVICE (ONLOT DISPOSAL SYSTEM)

ANDRASKO & ASSOCIATES, INC.
1011 LUX ROAD
JEANNETTE, PA 15644
CONTACT: RONALD R. ANDRASKO
PHONE: 724-744-0101

DOMESTIC WATER SERVICE (NO PUBLIC WATER)

BUTLER COUNTY HEALTH DEPARTMENT
100 BRUGH AVE.
BUTLER, PA 16001
PHONE: 724-287-1769

REFERENCE

1. VERTICAL DATUM IS BASED UPON NAVD88, AS DETERMINED BY CIVIL & ENVIRONMENTAL CONSULTANTS, INC., USING SURVEY GRADE GPS MEASUREMENTS AND OPUS POST-PROCESSING.
2. FIELD SURVEY BY CIVIL & ENVIRONMENTAL CONSULTANTS, INC. DATED 09/27/2016.

PROPERTY OWNER:

PTV XX, LLC
1563 WOODWARD DRIVE EXTENSION
GREENSBURG, PENNYSLVANIA 15601

CONTACT: AUSTIN WEINMAN (724) 420-5367

CIVIL ENGINEERING FIRM:

CIVIL & ENVIRONMENTAL CONSULTANTS, INC.
333 BALDWIN ROAD
PITTSBURGH, PENNSYLVANIA 15205

CONTACT: CHRISTOPHER J. REMLEY, P.E.
(412) 429-2324

DEVELOPER:

PTV XX, LLC
1563 WOODWARD DRIVE EXTENSION
GREENSBURG, PENNYSLVANIA 15601

CONTACT: AUSTIN WEINMAN (724) 420-5367

ARCHITECTURAL FIRM:

HART ARCHITECTURAL SERVICES, LLC
984 GREENFIELD AVE.
PITTSBURGH, PENNSYLVANIA 15217

CONTACT: NATHAN HART, R.A., LEED AP
(412) 214-7550

ONE CALL SERIAL NO.: 20162702202

CALL BEFORE YOU DIG!
PENNSYLVANIA LAW REQUIRES 3 WORKING DAYS NOTICE FOR CONSTRUCTION PHASE AND 10 WORKING DAYS IN DESIGN STAGE-STOP CALL PENNSYLVANIA ONE CALL SYSTEM, INC.
1-800-242-1776

PENNSYLVANIA ACT 38 (1991) REQUIRES NO LESS THAN 3 WORKING DAYS NOTICE NOR MORE THAN 10 WORKING DAYS NOTICE FROM EXCAVATORS WHO ARE ABOUT TO: DIG, DRILL, BLAST, AUGER, BORE, GRADE, TRENCH, OR DEMOLISH WHEN IN THE CONSTRUCTION PHASE. FOR LOCATION REQUESTS IN THE STATE OF PENNSYLVANIA, CALL TOLL FREE 1-800-242-1776.
UNDERGROUND UTILITIES HAVE BEEN PLOTTED FROM AVAILABLE INFORMATION AND THE LOCATION MUST BE CONSIDERED APPROXIMATE. OTHER UNDERGROUND UTILITIES MAY EXIST WHICH ARE NOT SHOWN. IT WILL BE THE CONTRACTOR'S RESPONSIBILITY TO ASCERTAIN ALL PHYSICAL LOCATIONS OF UTILITY LINES PRIOR TO THE TIME OF CONSTRUCTION. IN NO WAY SHALL THE CONTRACTOR HOLD THE SURVEYOR RESPONSIBLE FOR ANY UTILITY LOCATION SHOWN ON THIS PLAN.

PLAN BOOK	PAGE
365	13

*HAND SIGNATURE ON FILE

REGISTERED PROFESSIONAL
CHRISTOPHER J. REMLEY
ENGINEER
NO. 079999

SUBMITTAL & REVISION RECORD

NO	DATE	DESCRIPTION
1	02/15/2017	LAND DEVELOPMENT SUBMISSION #1 TO MUDDY CREEK TOWNSHIP
2	05/01/2017	APCES SUBMISSION #1 TO BUTLER COUNTY CONSERVATION DISTRICT
3	05/08/2017	RESPONSE TO COMMENTS FROM ANDRASKO DATED 04/05/2017
4	05/08/2017	DRIP PRESSURE CONTROL SET REVISIONS
5	05/08/2017	RESPONSE TO COMMENTS FROM CEC DATED 3/14/2017
6	08/03/2017	FINAL LAND DEVELOPMENT PLAN SET SUBMISSION TO MUDDY CREEK TOWNSHIP
7	08/14/2017	RESPONSE TO COMMENTS FROM PTV DATED 8/07/2017 & FINAL SUBMISSION TO BCCD FOR APCES PERMIT
8	08/21/2017	FINAL LAND DEVELOPMENT PLAN SET SUBMISSION TO MUDDY CREEK TOWNSHIP

Civil & Environmental Consultants, Inc.
333 Baldwin Road · Pittsburgh, PA 15205
412-429-2324 · 800-365-2324
www.cecinc.com

PTV XX, LLC
PORTERSVILLE DOLLAR GENERAL STORE
MUDDY CREEK TOWNSHIP
BUTLER COUNTY, PENNSYLVANIA

COVER SHEET

DATE	FEBRUARY 15, 2017
DRAWN BY	EJB/DMO
CHECKED BY	*CJR
DWG SCALE:	AS SHOWN
PROJECT NO	163-826
APPROVED BY	*GPQ

DRAWING NO.: C000
SHEET 1 OF 21

P:\2016\163-826\1 - CAD\0 Dwg\CIVIL\163826-C001-C003.dwg[C000] LS(7/20/2017 - eklos) - LP: 7/20/2017 12:07 PM

GENERAL NOTES

1. EXISTING CONDITIONS AS DEPICTED ON THESE PLANS ARE GENERAL AND ILLUSTRATIVE IN NATURE. IT IS THE RESPONSIBILITY OF THE CONTRACTOR TO EXAMINE THE SITE AND BE FAMILIAR WITH EXISTING CONDITIONS PRIOR TO BIDDING ON THIS PROJECT. IF CONDITIONS ENCOUNTERED DURING EXAMINATION ARE SIGNIFICANTLY DIFFERENT THAN THOSE SHOWN, THE CONTRACTOR SHALL NOTIFY THE ENGINEER IMMEDIATELY.
2. THE CONTRACTOR AND SUBCONTRACTORS SHALL BE RESPONSIBLE FOR COMPLYING WITH APPLICABLE FEDERAL, STATE AND LOCAL REQUIREMENTS, TOGETHER WITH EXERCISING PRECAUTIONS AT ALL TIMES FOR THE PROTECTION OF PERSONS (INCLUDING EMPLOYEES) AND PROPERTY. IT IS THE SOLE RESPONSIBILITY OF THE CONTRACTOR AND SUBCONTRACTORS TO INITIATE, MAINTAIN AND SUPERVISE ALL SAFETY REQUIREMENTS, PRECAUTIONS AND PROGRAMS IN CONNECTION WITH THE WORK.
3. THE CONTRACTOR SHALL INDEMNIFY AND HOLD HARMLESS THE OWNER AND OWNER'S REPRESENTATIVE AND ENGINEER FOR ANY AND ALL INJURIES AND OR DAMAGES TO PERSONNEL, EQUIPMENT AND/OR EXISTING FACILITIES OCCURRING IN THE COURSE OF THE DEMOLITION AND CONSTRUCTION DESCRIBED IN THE PLANS AND SPECIFICATIONS.
4. THE CONTRACTOR SHALL COMPLY WITH ALL LOCAL CODES, OBTAIN ALL APPLICABLE PERMITS, AND PAY ALL REQUIRED FEES PRIOR TO BEGINNING WORK.
5. ALL WORK PERFORMED BY THE CONTRACTOR SHALL CONFORM TO THE LATEST REGULATIONS OF THE AMERICANS WITH DISABILITIES ACT.
6. CONTRACTOR SHALL REFER TO OTHER PLANS WITHIN THIS CONSTRUCTION SET FOR OTHER PERTINENT INFORMATION. IT IS NOT THE ENGINEER'S INTENT THAT ANY SINGLE PLAN SHEET IN THIS SET OF DOCUMENTS FULLY DEPICT ALL WORK ASSOCIATED WITH THE PROJECT.
7. CONTRACTOR TO COMPLY WITH ALL APPLICABLE PENNDOT, MUDDY CREEK TOWNSHIP, UTILITY COMPANY, AND PROJECT SPECIFIC SPECIFICATIONS.
8. TOPOGRAPHICAL INFORMATION TAKEN FROM SURVEY PERFORMED BY CIVIL & ENVIRONMENTAL CONSULTANTS, INC. ON 09/27/16; FILENAME: "163826-SV01-ALTA.DWG".
9. BEFORE INSTALLATION OF STORM OR SANITARY SEWER, OR OTHER UTILITY, THE CONTRACTOR SHALL VERIFY ALL CROSSINGS, BY EXCAVATION WHERE NECESSARY, AND INFORM THE OWNER AND THE ENGINEER OF ANY CONFLICTS. THE ENGINEER WILL BE HELD HARMLESS IN THE EVENT HE IS NOT NOTIFIED OF DESIGN CONFLICTS PRIOR TO CONSTRUCTION.

DEMOLITION GENERAL NOTES

1. ALL EXISTING ABOVE AND BELOW GROUND STRUCTURES WITHIN THE LIMITS OF CONSTRUCTION SHALL BE REMOVED UNLESS NOTED OTHERWISE WITHIN THIS CONSTRUCTION SET AND/OR PROJECT SPECIFICATIONS. THIS INCLUDES FOUNDATION SLABS, WALLS AND FOOTINGS. CAVITIES LEFT BY STRUCTURE REMOVAL SHALL BE BACKFILLED WITH SATISFACTORY MATERIALS AND COMPACTED AS PER RECOMMENDATION FROM THE GEOTECHNICAL ENGINEERING SERVICES REPORT.
2. CLEARING LIMITS SHALL BE PHYSICALLY MARKED IN THE FIELD.
3. ALL DEMOLITION WASTE AND CONSTRUCTION DEBRIS SHALL BECOME THE PROPERTY OF THE CONTRACTOR UNLESS OTHERWISE DESIGNATED AND SHALL BE REMOVED BY THE CONTRACTOR AND DISPOSED OF OFFSITE IN A STATE APPROVED WASTE SITE AND IN ACCORDANCE WITH ALL LOCAL AND STATE CODES AND PERMIT REQUIREMENTS. TAKE CARE TO PROTECT UTILITIES THAT ARE TO REMAIN. REPAIR DAMAGE ACCORDING TO THE APPROPRIATE UTILITY COMPANY STANDARDS AND AT THE CONTRACTOR'S EXPENSE.
4. ALL UTILITY DISCONNECTION, REMOVAL, RELOCATION, CUTTING, CAPPING AND/OR ABANDONMENT SHALL BE COORDINATED WITH THE APPROPRIATE UTILITY COMPANY/AGENCY. UTILITY CONTACTS ARE LISTED ON THE COVER SHEET.
5. THE BURNING OF CLEARED MATERIAL AND DEBRIS SHALL NOT BE ALLOWED UNLESS CONTRACTOR OBTAINS PRIOR WRITTEN AUTHORIZATION FROM THE LOCAL AUTHORITIES.
6. EROSION AND SEDIMENTATION CONTROL MEASURES AROUND AREAS OF DEMOLITION SHALL BE PROPERLY INSTALLED AND SHALL FUNCTION PROPERLY PRIOR TO INITIATION OF DEMOLITION ACTIVITIES.
7. ASBESTOS OR HAZARDOUS MATERIALS, IF FOUND ON SITE, SHALL BE REMOVED BY A LICENSED HAZARDOUS MATERIALS CONTRACTOR. CONTRACTOR SHALL NOTIFY OWNER IMMEDIATELY IF HAZARDOUS MATERIALS ARE ENCOUNTERED.
8. CONTRACTOR SHALL ADHERE TO ALL LOCAL, STATE, FEDERAL AND OSHA REGULATIONS DURING ALL DEMOLITION ACTIVITIES.
9. CONTRACTOR SHALL PROTECT ALL CORNER PINS, MONUMENTS, PROPERTY CORNERS AND BENCHMARKS DURING DEMOLITION ACTIVITIES. IF DISTURBED, CONTRACTOR SHALL HAVE DISTURBED ITEMS RESET BY A LICENSED SURVEYOR AT NO ADDITIONAL COST TO THE OWNER.
10. CONTRACTOR SHALL PROTECT ALL EXISTING UTILITIES, STRUCTURES, AND FEATURES TO REMAIN. ANY ITEMS TO REMAIN THAT HAVE BEEN DISTURBED OR DAMAGED AS A RESULT OF CONSTRUCTION SHALL BE REPAIRED OR REPLACED BY THE CONTRACTOR AT CONTRACTOR'S EXPENSE.
11. CONTRACTOR SHALL PROVIDE AND MAINTAIN TRAFFIC CONTROL MEASURES IN ACCORDANCE WITH STATE DEPARTMENT OF TRANSPORTATION REGULATIONS AND AS REQUIRED BY LOCAL AGENCIES WHEN WORKING IN AND/OR ALONG STREETS, ROADS, HIGHWAYS, ETC. IT SHALL BE THE CONTRACTOR'S RESPONSIBILITY TO OBTAIN APPROVAL AND COORDINATE WITH LOCAL AND/OR STATE AGENCIES REGARDING THE NEED, EXTENT AND LIMITATIONS ASSOCIATED WITH INSTALLING AND MAINTAINING TRAFFIC CONTROL MEASURES.
12. PROVIDE NEAT, STRAIGHT, FULL DEPTH, SAW CUTS OF EXISTING PAVEMENT WHERE INDICATED ALONG LIMITS OF PAVEMENT DEMOLITION.
13. ALL UTILITY AND STRUCTURE REMOVAL, RELOCATION, CUTTING, CAPPING AND/OR ABANDONMENT SHALL BE COORDINATED AND PROPERLY DOCUMENTED BY A CERTIFIED PROFESSIONAL, WHEN APPLICABLE, WITH THE APPROPRIATE UTILITY COMPANY, MUNICIPALITY AND/OR AGENCY. DEMOLITION OF REGULATED ITEMS MAY INCLUDE, BUT ARE NOT LIMITED TO: WELLS, ASBESTOS, UNDER GROUND STORAGE TANKS, SEPTIC TANKS AND ELECTRIC TRANSFORMERS. DEMOLITION CONTRACTOR SHALL REFER TO ANY ENVIRONMENTAL STUDIES FOR DEMOLITION RECOMMENDATIONS AND GUIDANCE. AVAILABLE ENVIRONMENTAL STUDIES MAY INCLUDE, BUT ARE NOT LIMITED TO: PHASE I ESA, PHASE II, WETLAND AND STREAM DELINEATION AND ASBESTOS SURVEY. ALL APPLICABLE ENVIRONMENTAL STUDIES SHALL BE MADE AVAILABLE UPON REQUEST.
14. NO TREES SHALL BE REMOVED, NOR VEGETATION DISTURBED BEYOND THE LIMITS OF CONSTRUCTION WITHOUT THE EXPRESS WRITTEN APPROVAL OF THE OWNER'S REPRESENTATIVE.
15. ALL PAVEMENT, BASE COURSES, SIDEWALKS, CURBS, BUILDINGS, FOUNDATIONS, ETC., WITHIN THE AREA TO BE DEMOLISHED SHALL BE REMOVED TO FULL DEPTH. EXISTING BASE COURSE MATERIALS MAY BE WORKED INTO THE NEW PAVEMENT OR BUILDING SUBGRADE PROVIDED THAT THE GRADATION, CONSISTENCY, COMPACTION, SUBGRADE CONDITION, ETC., ARE IN ACCORDANCE WITH THE SPECIFICATIONS AND RECOMMENDATIONS OF THE REPORT OF GEOTECHNICAL INVESTIGATION. BASE COURSE MATERIALS SHALL NOT BE WORKED INTO THE SUBGRADE AREAS TO RECEIVE LANDSCAPING.
16. THE CONTRACTOR SHALL USE SUITABLE METHODS TO CONTROL DUST AND DIRT CAUSED BY THE DEMOLITION ACTIVITY.

LAYOUT GENERAL NOTES

1. THE CONTRACTOR SHALL CHECK EXISTING GRADES, DIMENSIONS, AND INVERTS IN THE FIELD AND REPORT ANY DISCREPANCIES TO THE OWNER'S REPRESENTATIVE PRIOR TO BEGINNING WORK.
2. THE CONTRACTOR SHALL VERIFY THE EXACT LOCATION OF ALL EXISTING UTILITIES, INCLUDING IRRIGATION LINES. TAKE CARE TO PROTECT UTILITIES THAT ARE TO REMAIN. RELOCATE EXISTING UTILITIES AS INDICATED, OR AS NECESSARY FOR CONSTRUCTION.
3. PROVIDE A SMOOTH TRANSITION BETWEEN EXISTING PAVEMENT AND NEW PAVEMENT. FIELD ADJUSTMENT OF FINAL GRADES MAY BE NECESSARY. INSTALL ALL UTILITIES, INCLUDING CONDUITS, PRIOR TO INSTALLATION OF PAVED SURFACES.
4. SITE WORK CONCRETE WALKS AND PADS SHALL HAVE A BROOM FINISH TO ALL SURFACES.
5. ALL DAMAGE TO EXISTING PAVEMENT TO REMAIN WHICH RESULTS FROM THE CONTRACTOR'S OPERATIONS SHALL BE REPLACED WITH LIKE MATERIALS AT THE CONTRACTOR'S EXPENSE.
6. SITE DIMENSIONS SHOWN ARE TO THE FACE OF CURB, OR EDGE OF PAVEMENT UNLESS OTHERWISE NOTED.
7. DIMENSIONS SHOWN ARE FOR CENTER OF SANITARY SEWER MANHOLES, CENTER OF STORM STRUCTURES AND CENTER AT FACE OF CURB FOR CURB INLETS, UNLESS OTHERWISE NOTED.
8. CONTRACTOR SHALL MAINTAIN ONE SET OF AS-BUILT/RECORD DRAWINGS ON THE JOB SITE DURING CONSTRUCTION FOR DISTRIBUTION TO THE OWNER AND/OR OWNER'S REPRESENTATIVE UPON COMPLETION.
9. REFER TO THE ARCHITECTURAL DRAWINGS FOR EXACT DIMENSIONS AND LOCATIONS OF UTILITY SERVICE ENTRY LOCATIONS AND PRECISE BUILDING DIMENSIONS.
10. THIS SITE LAYOUT IS SPECIFIC TO THE APPROVALS NECESSARY FOR THE CONSTRUCTION IN ACCORDANCE WITH MUDDY CREEK TOWNSHIP. NO CHANGES TO THE SITE LAYOUT ARE ALLOWED WITHOUT THE WRITTEN APPROVAL OF THE ENGINEER. CHANGES MADE TO THE SITE LAYOUT WITHOUT APPROVAL ARE SOLELY THE RESPONSIBILITY OF THE CONTRACTOR. CHANGES INCLUDE BUT ARE NOT LIMITED TO, INCREASED IMPERVIOUS PAVEMENT, ADDITION / DELETION OF PARKING SPACES, MOVEMENT OF CURB LINES, CHANGES TO DRAINAGE PATTERNS AND STRUCTURES, LANDSCAPING, ETC.

GRADING GENERAL NOTES

1. REFER TO AND FOLLOW THE RECOMMENDATIONS OF THE "GEOTECHNICAL ENGINEERING SERVICES REPORT" PREPARED FOR THIS PROJECT BY PROFESSIONAL SERVICE INDUSTRIES, INC., DATED JANUARY 3, 2017.
2. CONTRACTOR SHALL STRICTLY ADHERE TO THE EROSION AND SEDIMENTATION CONTROL PLAN PREPARED FOR THIS PROJECT.
3. EARTHWORK SHALL INCLUDE CLEARING AND GRUBBING, STRIPPING AND STOCKPILING TOPSOIL, MASS GRADING, EXCAVATION, FILLING, UNDER CUT AND REPLACEMENT, IF REQUIRED, AND COMPACTION.
4. CONTRACTOR TO REFILL UNDERCUT AREAS WITH SUITABLE MATERIAL AND COMPACT AS RECOMMENDED BY THE GEOTECHNICAL REPORT.
5. ALL AREAS NOT PAVED SHALL BE STABILIZED IN ACCORDANCE WITH THE EROSION AND SEDIMENTATION CONTROL PLAN, UNLESS NOTED OTHERWISE.
6. ALL EXCESS SOIL MATERIALS SHALL BECOME THE PROPERTY OF THE CONTRACTOR UNLESS OTHERWISE DESIGNATED AND SHALL BE REMOVED BY THE CONTRACTOR AND DISPOSED OF OFFSITE AT NO ADDITIONAL COST TO THE OWNER IN ACCORDANCE WITH ALL LOCAL AND STATE CODES AND PERMIT REQUIREMENTS.
7. BUILDING FOUNDATION DESIGN WAS PREPARED BY OTHERS. INSTALL IN ACCORDANCE WITH PLANS AND DETAILS PREPARED BY OTHERS.

DRAINAGE GENERAL NOTES

1. DISTANCES SHOWN ON PIPING ARE HORIZONTAL DISTANCES FROM CENTER OF STRUCTURE TO CENTER OF STRUCTURE, UNLESS OTHERWISE NOTED.
2. THE CONTRACTOR SHALL BE RESPONSIBLE FOR ALL COSTS ASSOCIATED WITH THE INSTALLATION, INSPECTION, TESTING AND FINAL ACCEPTANCE OF ALL NEW STORMWATER MANAGEMENT FACILITIES CONSTRUCTION. CONTRACTOR SHALL COORDINATE WITH ALL APPLICABLE REGULATING AGENCIES CONCERNING INSTALLATION, INSPECTION AND APPROVAL OF THE STORM DRAINAGE SYSTEM CONSTRUCTION.
3. ALL STORMWATER MANAGEMENT FACILITIES, INCLUDING COLLECTION AND CONVEYANCE STRUCTURES SHALL BE INSTALLED IN ACCORDANCE WITH ALL APPLICABLE LOCAL AND STATE CODES AND REGULATIONS INCLUDING, BUT NOT LIMITED TO, PENNDOT PUBLICATIONS 408 AND 72M, STANDARDS FOR ROADWAY CONSTRUCTION (RC).
4. ANY WORK PERFORMED IN THE LOCAL OR STATE RIGHT OF WAYS SHALL BE IN ACCORDANCE WITH THE APPLICABLE LOCAL OR STATE REQUIREMENTS. IT SHALL BE THE CONTRACTOR'S RESPONSIBILITY TO SCHEDULE NECESSARY INSPECTIONS AND PROVIDE THE NECESSARY TRAFFIC CONTROL MEASURES AND DEVICES, ETC., FOR WORK PERFORMED IN THE RIGHT OF WAYS.

UTILITY GENERAL NOTES

1. ALL PROPOSED UTILITY LINES AND EXTENSIONS ARE TO BE CONSTRUCTED IN ACCORDANCE WITH ALL APPLICABLE UTILITY COMPANY SPECIFICATIONS. CONTRACTOR SHALL COORDINATE UTILITY DISCONNECTIONS WITH THE APPROPRIATE AGENCY.
2. THE CONTRACTOR IS PARTICULARLY CAUTIONED THAT THE LOCATION AND/OR ELEVATION OF THE EXISTING UTILITIES SHOWN HEREON IS BASED ON TOPOGRAPHIC SURVEYS AND RECORD DRAWINGS. THE CONTRACTOR SHALL NOT RELY UPON THIS INFORMATION AS BEING EXACT OR COMPLETE. SHOULD UNCHARTED UTILITIES BE ENCOUNTERED DURING EXCAVATION OPERATIONS, THE CONTRACTOR SHALL NOTIFY THE ENGINEER IMMEDIATELY FOR INSTRUCTIONS. THE CONTRACTOR SHALL CALL THE APPROPRIATE UTILITY COMPANY AT LEAST 72 HOURS PRIOR TO ANY EXCAVATION AND REQUEST FIELD VERIFICATION OF UTILITY LOCATIONS. IT SHALL BE THE CONTRACTOR'S RESPONSIBILITY TO RELOCATE EXISTING UTILITIES CONFLICTING WITH IMPROVEMENTS SHOWN HEREON IN ACCORDANCE WITH ALL LOCAL, STATE, AND FEDERAL REGULATIONS GOVERNING SUCH OPERATIONS.
3. THE CONTRACTOR SHALL OBTAIN ALL REQUIRED UTILITY WORK PERMITS PRIOR TO COMMENCEMENT OF CONSTRUCTION.
4. THE CONTRACTOR IS RESPONSIBLE FOR COORDINATING THE SEQUENCING OF CONSTRUCTION FOR ALL UTILITY LINES SO THAT WATER LINES AND UNDERGROUND ELECTRIC CONDUITS DO NOT CONFLICT WITH SANITARY SEWERS OR STORM SEWERS. INSTALL UTILITIES PRIOR TO PAVEMENT CONSTRUCTION.
5. ALL TRENCH SPOILS BECOME THE PROPERTY OF THE CONTRACTOR. UNLESS OTHERWISE DESIGNATED, ALL TRENCH SPOILS SHALL BE REMOVED BY THE CONTRACTOR AND DISPOSED OF OFF SITE AT NO ADDITIONAL COST TO THE OWNER IN ACCORDANCE WITH ALL LOCAL AND STATE CODES AND PERMIT REQUIREMENTS.
6. ADJUST ALL EXISTING UTILITY SURFACE FEATURES INCLUDING BUT NOT LIMITED TO CASTINGS, VALVE BOXES, PEDESTALS, CLEANOUTS, ETC. TO MATCH PROPOSED FINISHED GRADES, UNLESS OTHERWISE INDICATED.
7. THE CONTRACTOR IS TO PROVIDE RECORD DRAWINGS OF ALL IMPROVEMENTS. INCLUDE AT LEAST TWO DIMENSIONS TO EACH VALVE AND MANHOLE FROM KNOWN SITE FEATURES. DRAWINGS SHALL INCLUDE HORIZONTAL AND VERTICAL INFORMATION ON ALL NEW UTILITIES AS WELL AS EXISTING UTILITIES ENCOUNTERED.
8. CONTRACTOR IS TO COORDINATE WITH EACH UTILITY PROVIDER REGARDING INSTALLATION OF UTILITY CONDUITS FOR ELECTRICAL WORK. CONTRACTOR SHALL PROVIDE ALL MATERIALS AND LABOR FOR THE TRENCHING AND CONDUIT INSTALLATION. COST FOR INSTALLATION AND MATERIALS SHALL BE INCLUDED IN VARIOUS BID ITEMS.

ABBREVIATIONS

TYP	TYPICAL
MIN	MINIMUM
DIA	DIAMETER
N.T.S.	NOT TO SCALE
GAL	GALLON
UG	UNDERGROUND
SAN	SANITARY SEWER
ST	STORM SEWER
TC	TOP OF CURB
BC	BOTTOM OF CURB
TW	TOP OF WALL
BW	BOTTOM OF WALL
CC	CURB CUT

ONE CALL SERIAL NO.: 20162702202

CALL BEFORE YOU DIG!
PENNSYLVANIA LAW REQUIRES 3 WORKING DAYS NOTICE FOR CONSTRUCTION PHASE AND 10 WORKING DAYS IN DESIGN STAGE-STOP CALL PENNSYLVANIA ONE CALL SYSTEM, INC.
1-800-242-1776

PENNSYLVANIA ACT 38 (1991) REQUIRES NO LESS THAN 3 WORKING DAYS NOTICE NOR MORE THAN 10 WORKING DAYS NOTICE FROM EXCAVATORS WHO ARE ABOUT TO: DIG, DRILL, BLAST, AUGER, BORE, GRADE, TRENCH, OR DEMOLISH WHEN IN THE CONSTRUCTION PHASE. FOR LOCATION REQUESTS IN THE STATE OF PENNSYLVANIA, CALL TOLL FREE 1-800-242-1776.
UNDERGROUND UTILITIES HAVE BEEN PLOTTED FROM AVAILABLE INFORMATION AND THE LOCATION MUST BE CONSIDERED APPROXIMATE, OTHER UNDERGROUND UTILITIES MAY EXIST WHICH ARE NOT SHOWN. IT WILL BE THE CONTRACTOR'S RESPONSIBILITY TO ASCERTAIN ALL PHYSICAL LOCATIONS OF UTILITY LINES PRIOR TO THE TIME OF CONSTRUCTION. IN NO WAY SHALL THE CONTRACTOR HOLD THE SURVEYOR RESPONSIBLE FOR ANY UTILITY LOCATION SHOWN ON THIS PLAN.
*HAND SIGNATURE ON FILE

PLAN BOOK	PAGE
365	14

COMMONWEALTH OF PENNSYLVANIA
REGISTERED PROFESSIONAL
CHRISTOPHER J. REMLEY
ENGINEER
NO. 079995

SUBMITTAL & REVISION RECORD

NO	DATE	DESCRIPTION
1	02/15/2017	LAND DEVELOPMENT SUBMISSION 01 TO MUDDY CREEK TOWNSHIP
2	02/21/2017	NPDES SUBMISSION 01 TO BUTLER COUNTY CONSERVATION DISTRICT
3	03/09/2017	RESPONSE TO COMMENTS FROM ENGINEER DATED 03/03/2017
4	03/29/2017	HART PRELIMINARY CIVIL SET SUBMISSION
5	03/30/2017	RESPONSE TO COMMENTS SUBMISSION TO BCCD DATED 3/14/2017
6	04/03/2017	FINAL LAND DEVELOPMENT PLAN SET SUBMISSION TO MUDDY CREEK TOWNSHIP
7	05/10/2017	RESPONSE TO COMMENTS FROM PTV DATED 05/01/2017 & FINAL SUBMISSION TO BCCD FOR NPDES PERMIT
8	07/13/2017	FINAL LAND DEVELOPMENT PLAN SET SUBMISSION TO MUDDY CREEK TOWNSHIP

CEC
Civil & Environmental Consultants, Inc.
333 Baldwin Road · Pittsburgh, PA 15205
412-429-2324 · 800-365-2324
www.cecinc.com

PTV XX, LLC
PORTERSVILLE DOLLAR GENERAL STORE
MUDDY CREEK TOWNSHIP
BUTLER COUNTY, PENNSYLVANIA

PROJECT NOTES

DATE:	FEBRUARY 15, 2017	DRAWN BY:	EJB/DMO
DWG SCALE:	AS SHOWN	CHECKED BY:	*CJR
PROJECT NO:	163-826		
APPROVED BY:	*GPQ		

DRAWING NO.: C001
SHEET 2 OF 21

P:\2016\163-826\-CADD\Dwg\CV01\163826-CV01-C000.dwg{C001} LS:(7/17/2017 - ebrice) - LP: 7/17/2017 4:05 PM

APPENDIX B

CERTIFICATES

The certificates listed in this Appendix shall be inscribed substantially as stated, and shall be properly signed in ink and attested when the plan is submitted for review or approval.

B-01. INDIVIDUAL ADOPTION, DEDICATION, AND RELEASE.

KNOW ALL MEN BY THESE PRESENTS, that (I or ~~We~~) PTV XX, LLC of the (~~City, Borough~~, Township) of County of WESTMORELAND Commonwealth of Pennsylvania, for (~~myself~~ ourselves), (~~my~~ our) heirs, executors, administrators and assigns, do hereby adopt this as (~~my~~ our) Plan of Lots of (~~my~~ our) property, situate in the Township of Muddy Creek, County of Butler, Commonwealth of Pennsylvania, and for divers advantages accruing to (~~me~~ us), do hereby irrevocably dedicate forever, for public use for highway, drainage, sewage and utility purposes, all streets and other public property identified for dedication on the plan to the public. Any future acceptance of said public streets or property by the Commonwealth of Pennsylvania, County of Butler or Township of Muddy Creek, (I or ~~We~~) PTV XX, LLC hereby covenant and agree to and by these presents do release and forever discharge said Commonwealth of Pennsylvania, County of Butler, and Township of Muddy Creek, their successors or assigns from any liability for damages arising and to arise from any appropriation of said ground for public highways and other public uses, and the physical grading thereof to any grades that may be established hereafter at any time. This dedication and release shall be binding upon PTV XX, LLC (~~my~~, our) heirs, executors, administrators and assigns and purchasers of lots in this plan.

IN WITNESS WHEREOF, (I or We) hereunto set (~~my~~, our) hand(s) and seal(s) this 20TH day of JULY, 2017.

ATTEST:

PTV XX, LLC
A PENNSYLVANIA LIMITED LIABILITY COMPANY
BY: PENNTEX VENTURES, LLC, A TEXAS LIMITED LIABILITY COMPANY, ITS SOLE MANAGER

COMMONWEALTH OF PENNSYLVANIA
NOTARIAL SEAL
Foreste Hess, Notary Public
North Huntingdon Twp., Westmoreland County
My Commission Expires Feb. 8, 2021
MEMBER, PENNSYLVANIA ASSOCIATION OF NOTARIES

Notary Public
My commission expires:

Owner or Owners

~~I~~/We, PTV XX, LLC, fully understanding and agree that the approval of the Board of Supervisors of the Township of Muddy Creek, if hereto attached, will become null and void unless this plan is recorded in the Recorder of Deeds Office of Butler County, County Court House, Butler, Pennsylvania, within ninety (90) days of date of said approval.

PTV XX, LLC
A PENNSYLVANIA LIMITED LIABILITY COMPANY
BY: PENNTEX VENTURES, LLC, A TEXAS LIMITED LIABILITY COMPANY, ITS SOLE MANAGER

Owner or Owners

B-08. BOARD OF SUPERVISORS FINAL APPROVAL CERTIFICATE.

The Board of Supervisors of the Township of Muddy Creek hereby gives public notice that it is approving this plan for recording purposes only. The Board of Supervisors has not accepted dedication of any streets, lands or public facilities and has no obligation, legal or otherwise, to improve or maintain such streets, lands or public facilities.

This plan approved by action of the Board of Supervisors of the Township of Muddy Creek, Butler County, Pennsylvania on this 21 day of June, 2017.

ATTEST:

Secretary, Board of Supervisors

Chairman,
Board of Supervisors

SEAL

BUTLER COUNTY PLANNING COMMISSION

B-09 BUTLER COUNTY PLANNING COMMISSION CERTIFICATE.

Reviewed with or without comments by the Butler County Planning Commission this 15TH day of MARCH, 2017.

SEC

~~Director~~ CHAIRMAN

SEAL

B-10. PROOF OF RECORDING.

COMMONWEALTH OF PENNSYLVANIA }
} ss
COUNTY OF BUTLER }

Recorded in the office for the recording of deeds, plats, etc., in said County, at Instrument Number 201708220017806. Plan Book 365 page 13-33

Given under my hand and seal this 22 day of Aug., A.D. 2017.

Recorder

RECORDER OF DEEDS
BUTLER COUNTY, PA

MUDDY CREEK TOWNSHIP SUPERVISORS
OFFICIAL SEAL
BUTLER CO. PA

ACKNOWLEDGMENT

COMMONWEALTH OF PENNSYLVANIA

COUNTY OF Westmoreland

Before me, the subscriber, a Notary Public in and for said Commonwealth and County, personally appeared Timothy Weinman, Sole Manager of PTV XX, LLC, who being duly sworn according to law, deposes and says that PTV XX, LLC is the owner of the property shown on this plan, that he is authorized to execute said plan on behalf of PTV XX, LLC, that said plan is the act and deed of PTV XX, LLC and that PTV XX, LLC desires said plan be recorded as such.

COMMONWEALTH OF PENNSYLVANIA
NOTARIAL SEAL
Foreste Hess, Notary Public
North Huntingdon Twp., Westmoreland County
My Commission Expires Feb. 8, 2021
MEMBER, PENNSYLVANIA ASSOCIATION OF NOTARIES

Timothy Weinman

Sole Manager of PTV XX, LLC

Sworn to and subscribed before me this day.

WITNESS MY HAND AND NOTARIAL SEAL this 20th day of July, 2017

Notary Public

SEAL

My commission expires: Feb. 8, 2021

B-05. CERTIFICATE OF TITLE – NO MORTGAGE.

I/we _____, do hereby certify that the title to the property shown hereon is in the name of _____ and is recorded in Deed Book Volume _____, Page _____, or Instrument No. _____.

I/we further certify that there is no mortgage, lien or other encumbrance against this property.

WITNESS: OWNERS:

_____ _____

B-06. CERTIFICATE OF TITLE – MORTGAGE CLAUSE.

~~I~~/we, PTV XX, LLC do hereby certify that the title to the property shown hereon is in the name of PTV XX, LLC and is recorded in Deed Book Volume ____, Page ____, or Instrument No. 201706160012581, and there is a mortgage on the property held by ~~PTV XX, LLC~~ First National Bank of Pennsylvania.

WITNESS:

OWNERS:
PTV XX, LLC
A PENNSYLVANIA LIMITED LIABILITY COMPANY
BY: PENNTEX VENTURES, LLC, A TEXAS LIMITED LIABILITY COMPANY, ITS SOLE MANAGER

Name of Mortgagee, mortgagee of the property contained in the (name of the plan) consents to the recording of said plan and to the dedications and all other matters appearing on the plan.

WITNESS: MORTGAGEE

Printed Name WAYNE H. FREED
Title VICE PRESIDENT

B-07. TOWNSHIP PLANNING COMMISSION RECOMMENDATION FOR APPROVAL.

This plan has been recommended for approval by the Planning Commission of the Township of Muddy Creek, Butler County, Commonwealth of Pennsylvania on this 7th day of March, 2017.

ATTEST:

Secretary Recording

Chairman Member

B-11. PROFESSIONAL LAND SURVEYOR CERTIFICATE.

I, James Bruggeman a Professional Land Surveyor of the Commonwealth of Pennsylvania, do hereby certify that this plan shown hereon is based upon actual field survey of the land described and that all angles, distances, and courses are correctly shown, that the monuments and markers as shown on the plat have been set, and to the best of my knowledge, that this plan correctly represents the lots, lands, streets, and highways as surveyed and plotted by me for the owners or agents.

SEAL

Surveyor's Name
Surveyor's Registration No. SU-051772-E

Date: 7/18/17

COMMONWEALTH OF PENNSYLVANIA
James R. Bruggeman
SURVEYOR
SU-051772-E

PLAN BOOK	PAGE
365	15

*HAND SIGNATURE ON FILE

COMMONWEALTH OF PENNSYLVANIA
REGISTERED
PROFESSIONAL
CHRISTOPHER J. REMLEY
ENGINEER
NO. 079990

SUBMITTAL & REVISION RECORD

NO	DATE	DESCRIPTION
1	03/15/2017	LAND DEVELOPMENT SUBMISSION TO MUDDY CREEK TOWNSHIP
2	05/31/2017	NPDES SUBMISSION TO BUTLER COUNTY CONSERVATION DISTRICT
3	06/06/2017	RESPONSE TO COMMENTS FROM ENGINEER DATED 05/05/2017
4	06/08/2017	HART FREELAND PRELIMINARY CIVIL SET SUBMISSION
5	06/30/2017	RESPONSE TO COMMENTS SUBMISSION TO BCCD DATED 3/14/2017
6	04/03/2017	FINAL LAND DEVELOPMENT PLAN SET SUBMISSION TO MUDDY CREEK TOWNSHIP
7	06/15/2017	RESPONSE TO COMMENTS FROM PTV DATED 05/01/2017 & FINAL SUBMISSION TO BCCD FOR NPDES PERMIT
8	07/13/2017	FINAL LAND DEVELOPMENT PLAN SET SUBMISSION TO MUDDY CREEK TOWNSHIP

CEC
Civil & Environmental Consultants, Inc.
333 Baldwin Road · Pittsburgh, PA 15205
412-429-2324 · 800-365-2324
www.cecinc.com

PTV XX, LLC
PORTERSVILLE DOLLAR GENERAL STORE
MUDDY CREEK TOWNSHIP
BUTLER COUNTY, PENNSYLVANIA

CERTIFICATION SHEET

DATE:	FEBRUARY 15, 2017
DRAWN BY:	EJB/ DMO
DWG SCALE:	AS SHOWN
CHECKED BY:	*CJR
PROJECT NO:	163-826
APPROVED BY:	*GPQ

DRAWING NO.: C002

SHEET 3 OF 21

P:\2016\163-826\~0400\dwg\CIVIL\163826-C001-C060.dwg(C002) LD(7/13/2017 - dsnow) - LD: 7/13/2017 4:05 PM

NORTH

240-51-A1
INSTR. #201104190009569
4-18-2011
NANCY C. STEWART
TO
JOHN E. EPPINGER, et ux
SUNSET RIDGE
P.B.V. 30, PG. 44
LOT 1
NON-DEVELOPED

240-51-A2
INSTR. #201104190009569
4-18-2011
NANCY C. STEWART
TO
JOHN E. EPPINGER, et ux
SUNSET RIDGE
P.B.V. 30, PG. 44
LOT 2
NON-DEVELOPED

240-51-A3
INSTR. #201104190009569
4-18-2011
NANCY C. STEWART
TO
JOHN E. EPPINGER, et ux
SUNSET RIDGE
P.B.V. 30, PG. 44
LOT 3
NON-DEVELOPED

240-51-A4
INSTR. #201104190009569
4-18-2011
NANCY C. STEWART
TO
JOHN E. EPPINGER, et ux
SUNSET RIDGE
P.B.V. 30, PG. 44
LOT 4
NON-DEVELOPED

N 17°44'25" W 350.89'

10' REAR YARD SETBACK

GAP

240-4F135-200A
D.B.V. 2530, PG. 84
5-26-1995
GARY C. LISICA
TO
KIRK D. HOTHAM, et ux
RESIDENTIAL

240-4F135-20
D.B.V. 1413, PG. 22
7-13-1988
DONALD E. WILLIAMS, et ux
TO
EDWARD E. RODGERS, et ux
RESIDENTIAL

240-4F135-20D
INSTR. #201405140010501
5-13-2014
RICO T. SUSANO
TO
GEORGE V. CHESSMAN, et ux
UNDEVELOPED

240-4F135-20B
D.B.V. 1368, PG. 213
4-29-1982
DENNIS E. RICHARD
TO
JAMES A. BOYD

240-4F135-200B
D.B.V. 1595, PG. 167
5-21-1990
CHARLES FRANK McCONNELL
TO
DWIGHT DOUGLAS McCONNELL, et ux
COMMERCIAL

10' SIDE YARD SETBACK

75' FRONT YARD SETBACK

S 86°45'43" W 480.45'

S 30°36'58" E 110.48'

S 30°36'58" E 130.18'

S 3°25'08" E 208.58'

PERRY HIGHWAY
ROUTE 19

EDGE OF ASPHALT

PT 123+54.18

APPROXIMATE LOCATION OF PROPERTY AND 20' RIGHT OF WAY
SEE D.B.V. 1027, PG. 9123

SHED

1 ELEC METERS ON POWER POLE

1 ELEC METERS ON POWER POLE

#389410

#382570

#389409

#427862

#213867

#92885

#213879

CONC PAD

CONC PAD

CONC PAD

TRAILER

LOADER

BUILDING

BUILDING

BUILDING

BUILDING

BUILDING

GRAVEL

GRAVEL

GRAVEL

GRAVEL

GRAVEL

ASPHALT PAVING

ASPHALT PAVING

ASPHALT PAVING

ASPHALT PAVING

ASPHALT PAVING

SEPTIC TANK (T=1331.1)

SEPTIC TANK T=1331.31

SEPTIC TANK T=1331.45

SEPTIC TANK T=1331.98

ELEC. BOX ON POWER POLE

SAN CO

SAN CO

WWMH

C.BASIN T=1334.6

C.BASIN T=1326.71 I=1325.9

A=231.86'
R=3854.83'
Δ=3°26'56"
CH BRG= S 28°53'15" E
CH LEN=231.83'

A=208.56'
R=3818.83'
Δ=3°07'42"
CH BRG= S 29°02'47" E
CH LEN=208.53'

18" CMP

12" CMP

OH-E

3-HO

GAS

POWER

T.S. 902
C800

CENTERLINE

18" WATER

8" WATER

LEGEND

- EXISTING SUBJECT PROPERTY LINE
- EXISTING ADJACENT PROPERTY LINE
- EXISTING RIGHT-OF-WAY
- EXISTING SETBACK LINE
- EXISTING PROPERTY EASEMENT
- EXISTING INDEX CONTOUR
- EXISTING INTERMEDIATE CONTOUR
- EXISTING UNPAVED DRIVEWAY
- EXISTING PAVED ROAD
- EXISTING TREELINE
- EXISTING BUILDING
- OH-E EXISTING OVERHEAD ELECTRICAL LINE
- G EXISTING GAS LINE
- ST EXISTING STORM SEWER LINE
- EXISTING UTILITY POLE
- EXISTING STORM INLET
- EXISTING GAS METER
- EXISTING SANITARY SEWER SEPTIC TANK
- EXISTING CLEAN OUT
- EXISTING ELECTRIC METER

REFERENCE

1. VERTICAL DATUM IS BASED UPON NAVD88, AS DETERMINED BY CIVIL & ENVIRONMENTAL CONSULTANTS, INC., USING SURVEY GRADE GPS MEASUREMENTS AND OPUS POST-PROCESSING.
2. FIELD SURVEY BY CIVIL & ENVIRONMENTAL CONSULTANTS, INC. DATED 09/27/2016.

PLAN BOOK	PAGE
365	16

SCALE IN FEET
0 30 60

ONE CALL SERIAL NO.: 20162702202

CALL BEFORE YOU DIG!
PENNSYLVANIA LAW REQUIRES 3 WORKING DAYS NOTICE FOR CONSTRUCTION PHASE AND 10 WORKING DAYS IN DESIGN STAGE-STOP CALL PENNSYLVANIA ONE CALL SYSTEM, INC.
1-800-242-1776

PENNSYLVANIA ACT 38 (1991) REQUIRES NO LESS THAN 3 WORKING DAYS NOTICE NOR MORE THAN 10 WORKING DAYS NOTICE FROM EXCAVATORS WHO ARE ABOUT TO: DIG, DRILL, BLAST, AUGER, BORE, GRADE, TRENCH, OR DEMOLISH WHEN IN THE CONSTRUCTION PHASE. FOR LOCATION REQUESTS IN THE STATE OF PENNSYLVANIA, CALL TOLL FREE 1-800-242-1776. UNDERGROUND UTILITIES HAVE BEEN PLOTTED FROM AVAILABLE INFORMATION AND THE LOCATION MUST BE CONSIDERED APPROXIMATE. OTHER UNDERGROUND UTILITIES MAY EXIST WHICH ARE NOT SHOWN. IT WILL BE THE CONTRACTOR'S RESPONSIBILITY TO ASCERTAIN ALL PHYSICAL LOCATIONS OF UTILITY LINES PRIOR TO THE TIME OF CONSTRUCTION. IN NO WAY SHALL THE CONTRACTOR HOLD THE SURVEYOR RESPONSIBLE FOR ANY UTILITY LOCATION SHOWN ON THIS PLAN.

*HAND SIGNATURE ON FILE

COMMONWEALTH OF PENNSYLVANIA
REGISTERED PROFESSIONAL
CHRISTOPHER J. REMLEY
ENGINEER
NO. 079999

SUBMITTAL & REVISION RECORD

NO	DATE	DESCRIPTION
1	02/15/2017	LAND DEVELOPMENT SUBMISSION #1 TO MUDDY CREEK TOWNSHIP
2	02/21/2017	NPDES SUBMISSION #1 TO BUTLER COUNTY CONSERVATION DISTRICT
3	03/28/2017	RESPONSE TO COMMENTS FROM ENGINEER DATED 03/03/2017
4	03/28/2017	HART PRELIMINARY CIVIL SET SUBMISSION
5	03/30/2017	RESPONSE TO COMMENTS SUBMISSION TO BCCD DATED 3/14/2017
6	04/20/2017	FINAL LAND DEVELOPMENT PLAN SET SUBMISSION TO MUDDY CREEK TOWNSHIP
7	06/15/2017	RESPONSE TO COMMENTS FROM PTV DATED 05/31/2017 & FINAL SUBMISSION TO BCCD FOR NPDES PERMIT
8	07/13/2017	FINAL LAND DEVELOPMENT PLAN SET SUBMISSION TO MUDDY CREEK TOWNSHIP

Civil & Environmental Consultants, Inc.
333 Baldwin Road · Pittsburgh, PA 15205
412-429-2324 · 800-365-2324
www.cecinc.com

PTV XX, LLC
PORTERSVILLE DOLLAR GENERAL STORE
MUDDY CREEK TOWNSHIP
BUTLER COUNTY, PENNSYLVANIA

OVERALL EXISTING CONDITIONS

DATE: FEBRUARY 15, 2017 | DRAWN BY: EJB/DMC
DWG SCALE: 1"=30' | CHECKED BY: *CJR
PROJECT NO: 163-826 | APPROVED BY: *GPQ

DRAWING NO.: **C100**
SHEET 4 OF 21

P:\2016\163-826\...\Engineering\CAD\Dwg\C100\163826-C100.dwg 7/13/2017 - LP 7/11/2017 8:05 PM

NORTH

240-4F135-200A
D.B.V. 2530, PG. 842
5-26-1995
GARY C. LISICA
TO
KIRK D. HOTHAM, et ux
RESIDENTIAL

SUBJECT PARCEL

BUILDING

GRAVEL

1360

1355

1350

1345

1340

1335

1330

1325

440.69'

10' SIDE YARD SETBACK

S 88°45'43" W 480.45'

240-4F135-20
D.B.V. 1413, PG. 22
7-13-1988
DONALD E. WILLIAMS, et ux
TO
EDWARD E. RODGERS, et al
RESIDENTIAL

N 30°36'38" W 117.39'

N 88°45'43" E 130.00'

DO NOT DISTURB THIS AREA
HEAVY MACHINERY NOT PERMITTED IN THIS AREA

REMOVE ALL EXISTING GRAVEL (TYP.)

REMOVE EXISTING ELECTRIC POLE

STRIP AND REMOVE EXISTING TOPSOIL

ABANDON EXISTING WELL

SHED

REMOVE EXISTING STRUCTURE

4 ELEC METERS ON POWER POLE

REMOVE EXISTING ELECTRIC POLE OVERHEAD ELECTRIC LINES

#582570

#389410

#389409

2 ELEC METERS ON POWER POLE

REMOVE EXISTING ELECTRIC POLE OVERHEAD ELECTRIC LINES

REMOVE EXISTING ELECTRIC POLE AND OVERHEAD ELECTRIC LINE WITH CAUTION TO NOT DISTURB FLAGGED AREA

240-4F135-20DB
INSTR. #201605140010501
5-12-2014
ROSS F. SUDANO
TO
GEORGE V. CHEESEMAN, et ux
UNDEVELOPED

CUT AND CLEAR EXISTING WOODLANDS TO THE LIMITS SHOWN ON PLAN C200

REMOVE EXISTING CONCRETE PADS

CONC PAD

CONC PAD

REMOVE EXISTING OVERHEAD ELECTRIC

REMOVE EXISTING SEPTIC TANKS

240-4F135-20D
D.B.V. 1398, PG. 213
4-28-1988
DENNIS C. RICKARD
TO
JAMES A. BOYD

75' FRONT YARD SETBACK

REMOVE EXISTING STRUCTURE

TRAILER

REMOVE EXISTING TRAILERS

REMOVE EXISTING CLEANOUTS

SAN

CO

SEPTIC TANK T=1331.31

SEPTIC TANK T=1331.63

SEPTIC TANK T=1331.98

ELEC BOX ON POWER POLE

BUILDING

#213867

APPROXIMATE LOCATION CONTRATOR TO FIELD LOCATE AND REMOVE EXISTING SANITARY LINE

REMOVE EXISTING CONCRETE PAD

EXISTING GAS LINE TO REMAIN (SEE SHEET C500)

REMOVE EXISTING OVERHEAD ELECTRIC

REMOVE ALL EXISTING ASPHALT PAVING (TYP.)

ASPHALT PAVING

A=231.86'
R=3854.83'
Δ=3°26'46"
CH BRG= S 28°53'15" E
CH LEN=231.83'

240-4F135-20DBA
D.B.V. 1590, PG. 167
2-21-1990
CHARLES FRANK McCONNELL
TO
DWIGHT DOUGLAS McCONNELL, et ux
COMMERCIAL

#92865

#92866

EXISTING OVERHEAD ELECTRIC LINE AND POLE TO REMAIN

S 30°36'38" E
110.48'

C.BASIN
I=1332.20
I=1334.0

C.BASIN
I=1328.71
I=1325.9

EDGE OF ASPHALT

130.18'

S 30°36'38" E

124+00

123+00

122+00

121+00

120+00

CENTERLINE

802
C800

SAWCUT APPROXIMATELY 110 LF EXISTING PAVEMENT

PERRY HIGHWAY
ROUTE 19

PT 123+54.18

A=208.56'
R=3819.83'
Δ=3°07'42"
CH BRG= S 29°02'47" E
CH LEN=208.53'

APPROXIMATE PROPERTY & ROW LINE SEE D.B.V. 1

#427862

#316970

S 25°20'08" E 420.68'

LEGEND

- EXISTING SUBJECT PROPERTY LINE
- EXISTING ADJACENT PROPERTY LINE
- EXISTING RIGHT-OF-WAY
- EXISTING SETBACK LINE
- EXISTING PROPERTY EASEMENT
- EXISTING INDEX CONTOUR
- EXISTING INTERMEDIATE CONTOUR
- EXISTING UNPAVED DRIVEWAY
- EXISTING PAVED ROAD
- EXISTING TREELINE
- EXISTING BUILDING
- OH-E — EXISTING OVERHEAD ELECTRICAL LINE
- G — EXISTING GAS LINE
- ST — EXISTING STORM SEWER LINE
- EXISTING UTILITY POLE
- EXISTING STORM INLET
- EXISTING GAS METER
- EXISTING SANITARY SEWER SEPTIC TANK
- EXISTING CLEAN OUT
- EXISTING ELECTRIC METER
- EXISTING PAVEMENT SAWCUT
- DO NOT DISTURB AREA

PLAN BOOK	PAGE
365	17

NOTES:

1. CONTRACTOR SHALL COMPLY WITH OSHA STANDARDS DURING ALL DEMOLITION AND CONSTRUCTION ACTIVITIES.
2. REFER TO GEOTECHNICAL ENGINEERING SERVICES REPORT PREPARED BY PROFESSIONAL SERVICE INDUSTRY, LLC DATED JANUARY 3, 2017.
3. DEMOLITION DEBRIS FROM THE EXISTING SITE SHALL BE REMOVED IN THEIR ENTIRETY BENEATH THE PROPOSED BUILDING FOOTPRINT.
4. CONTRACTOR SHALL REFER TO GENERAL DEMOLITION AND UTILITY NOTES ON DRAWING NO. C001.
5. REMOVE EXISTING PLANTS/VEGETATION AS NEEDED TO PERFORM DEMOLITION, INSTALLATIONS, AND/OR GRADING OPERATIONS.
6. REFER TO C200 SITE LAYOUT PLAN FOR PROPOSED EDGE OF TREES/WOODLANDS LOCATION.

ONE CALL SERIAL NO.: 20162702202

CALL BEFORE YOU DIG!
PENNSYLVANIA LAW REQUIRES 3 WORKING DAYS NOTICE FOR CONSTRUCTION PHASE AND 10 WORKING DAYS IN DESIGN STAGE–STOP CALL PENNSYLVANIA ONE CALL SYSTEM, INC.
1-800-242-1776

PENNSYLVANIA ACT 38 (1991) REQUIRES NO LESS THAN 3 WORKING DAYS NOTICE NOR MORE THAN 10 WORKING DAYS NOTICE FROM EXCAVATORS WHO ARE ABOUT TO: DIG, DRILL, BLAST, AUGER, BORE, GRADE, TRENCH, OR DEMOLISH WHEN IN THE CONSTRUCTION PHASE. FOR LOCATION REQUESTS IN THE STATE OF PENNSYLVANIA, CALL TOLL FREE 1-800-242-1776. UNDERGROUND UTILITIES HAVE BEEN PLOTTED FROM AVAILABLE INFORMATION AND THE LOCATION MUST BE CONSIDERED APPROXIMATE. OTHER UNDERGROUND UTILITIES MAY EXIST WHICH ARE NOT SHOWN. IT WILL BE THE CONTRACTOR'S RESPONSIBILITY TO ASCERTAIN ALL PHYSICAL LOCATIONS OF UTILITY LINES PRIOR TO THE TIME OF CONSTRUCTION. IN NO WAY SHALL THE CONTRACTOR HOLD THE SURVEYOR RESPONSIBLE FOR ANY UTILITY LOCATION SHOWN ON THIS PLAN. *HAND SIGNATURE ON FILE

REFERENCE

1. VERTICAL DATUM IS BASED UPON NAVD88, AS DETERMINED BY CIVIL & ENVIRONMENTAL CONSULTANTS, INC., USING SURVEY GRADE GPS MEASUREMENTS AND OPUS POST-PROCESSING.
2. FIELD SURVEY BY CIVIL & ENVIRONMENTAL CONSULTANTS, INC. DATED 09/27/2016.

SCALE IN FEET
0 20 40

REGISTERED PROFESSIONAL ENGINEER
CHRISTOPHER J. REMLEY
NO. 079995
COMMONWEALTH OF PENNSYLVANIA

SUBMITTAL & REVISION RECORD

NO	DATE	DESCRIPTION
1	02/15/2017	LAND DEVELOPMENT SUBMISSION 01 TO MUDDY CREEK TOWNSHIP
2	02/21/2017	NPDES SUBMISSION 01 TO BUTLER COUNTY CONSERVATION DISTRICT
3	03/06/2017	RESPONSE TO COMMENTS FROM ENGINEER DATED 03/03/2017
4	03/28/2017	HART PRELIMINARY CIVIL SET SUBMISSION
5	03/30/2017	RESPONSE TO COMMENTS SUBMISSION TO BCCD DATED 3/14/2017
6	04/13/2017	FINAL LAND DEVELOPMENT PLAN SET SUBMISSION TO MUDDY CREEK TOWNSHIP
7	06/12/2017	RESPONSE TO COMMENTS FROM FTV DATED 05/31/2017 & FINAL SUBMISSION TO BCCD FOR NPDES PERMIT
8	07/13/2017	FINAL LAND DEVELOPMENT PLAN SET SUBMISSION TO MUDDY CREEK TOWNSHIP

Civil & Environmental Consultants, Inc.
333 Baldwin Road · Pittsburgh, PA 15205
412-429-2324 · 800-365-2324
www.cecinc.com

PTV XX, LLC
PORTERSVILLE DOLLAR GENERAL STORE
MUDDY CREEK TOWNSHIP
BUTLER COUNTY, PENNSYLVANIA

EXISTING CONDITIONS AND DEMOLITION PLAN

DATE:	FEBRUARY 15, 2017
DRAWN BY:	EJB/DMO
CHECKED BY:	*CJR
DWG SCALE:	1" = 20'
PROJECT NO.:	163-826 *GPQ
APPROVED BY:	

DRAWING NO.: C101

SHEET 5 OF 21

P:\2016\163-826\1-2400\Dwg\C101\163826-CVG-C100.dwg(C101) 5/3/9/2017 - abeissenherz) - LP: 7/12/2017 4:05 PM

NORTH

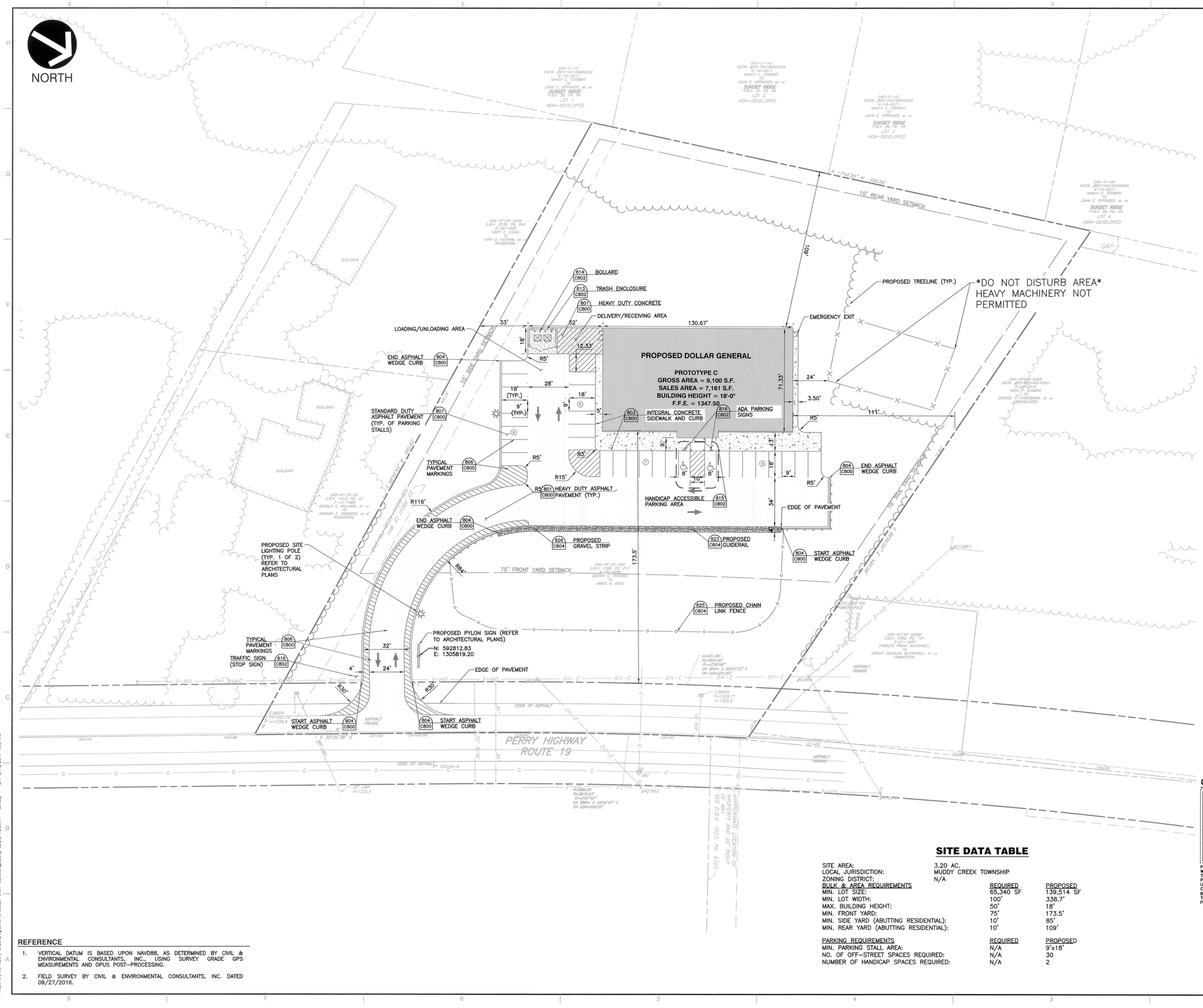
PROPOSED DOLLAR GENERAL
PROTOTYPE C
GROSS AREA = 9,100 S.F.
SALES AREA = 7,161 S.F.
BUILDING HEIGHT = 18'-0"
F.F.E. = 1347.50
814 C802 BOLLARD
813 C802 TRASH ENCLOSURE
801 C800 HEAVY DUTY CONCRETE
DELIVERY/RECEIVING AREA
LOADING/UNLOADING AREA
END ASPHALT WEDGE CURB 804 C800
STANDARD DUTY ASPHALT PAVEMENT (TYP. OF PARKING STALLS) 801 C800
TYPICAL PAVEMENT MARKINGS 806 C800
HEAVY DUTY ASPHALT PAVEMENT (TYP.) 801 C800
INTEGRAL CONCRETE SIDEWALK AND CURB 903 C800
ADA PARKING SIGNS 816 C802
HANDICAP ACCESSIBLE PARKING AREA 815 C802
EMERGENCY EXIT
PROPOSED TREELINE (TYP.)
DO NOT DISTURB AREA HEAVY MACHINERY NOT PERMITTED
EDGE OF PAVEMENT
END ASPHALT WEDGE CURB 804 C800
START ASPHALT WEDGE CURB 804 C800
PROPOSED GRAVEL STRIP 826 C804
PROPOSED GUIDERAIL 822 C804
PROPOSED CHAIN LINK FENCE 820 C804
PROPOSED SITE LIGHTING POLE (TYP. 1 OF 2) REFER TO ARCHITECTURAL PLANS
PROPOSED PYLON SIGN (REFER TO ARCHITECTURAL PLANS)
N: 592812.83
E: 1305819.20
TRAFFIC SIGN (STOP SIGN) 816 C802
10' REAR YARD SETBACK
10' SIDE YARD SETBACK
75' FRONT YARD SETBACK
PERRY HIGHWAY ROUTE 19
S 30°36'38" E
N 17°44'39" W 350.69'
240-4F135-20 D.B.V. 1413, PG. 22 7-13-1988 DONALD E. WILLIAMS, et ux TO EDWARD E. ROGERS, et ux RESIDENTIAL
240-4F135-20GA D.B.V. 2535, PG. 842 5-26-1993 GARY C. LOSCH TO KIRK D. HOTHAM, et ux RESIDENTIAL
240-51-A1 INSTR. #201104190009569 4-18-2011 NANCY C. STEWART TO JOHN E. EPPINGER, et ux SUNSET RIDGE P.B.V. 30, PG. 44 LOT 1 NON-DEVELOPED
240-51-A2 INSTR. #201104190009569 4-18-2011 NANCY C. STEWART TO JOHN E. EPPINGER, et ux SUNSET RIDGE P.B.V. 30, PG. 44 LOT 2 NON-DEVELOPED
240-51-A3 INSTR. #201104190009569 4-18-2011 NANCY C. STEWART TO JOHN E. EPPINGER, et ux SUNSET RIDGE P.B.V. 30, PG. 44 LOT 3 NON-DEVELOPED
240-51-A4 INSTR. #201104190009569 4-18-2011 NANCY C. STEWART TO JOHN E. EPPINGER, et ux SUNSET RIDGE P.B.V. 30, PG. 44 LOT 4 NON-DEVELOPED
240-4F135-20GB INSTR. #201605140010501 5-24-2016 ROSS T. SUSANO TO GEORGE W. CHEESEMAN, et ux UNDEVELOPED
240-4F135-20GA D.B.V. 1599, PG. 167 7-21-1998 CHARLES FRANK McCONNELL TO DWIGHT DOUGLAS McCONNELL, et ux COMMERCIAL
240-4F135-200 D.B.V. 1396, PG. 913 6-26-1989 DENNIS E. RICKARD TO JAMES A. BOYD
#213967
#428862
#427862
#428861
#428860
#428859
#428858
#428857
#428856
#428855
#428854
#428853
#428852
#428851
#428850
#428849
#428848
#428847
#428846
#428845
#428844
#428843
#428842
#428841
#428840
#428839
#428838
#428837
#428836
#428835
#428834
#428833
#428832
#428831
#428830
#428829
#428828
#428827
#428826
#428825
#428824
#428823
#428822

NORTH

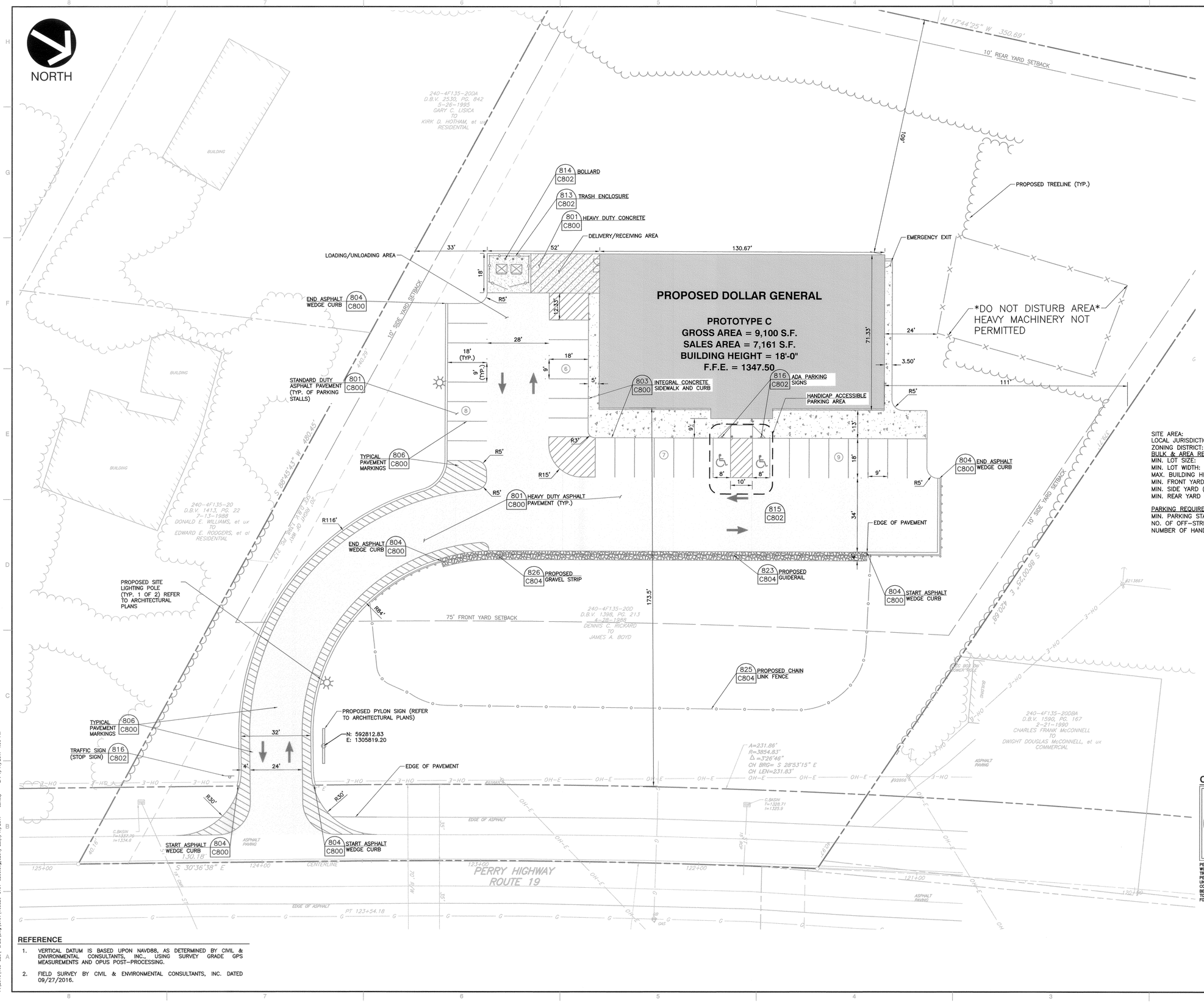
814 C802 BOLLARD
813 C802 TRASH ENCLOSURE
801 C800 HEAVY DUTY CONCRETE
DELIVERY/RECEIVING AREA
LOADING/UNLOADING AREA
33'
52'
130.67'
18'
R5'
END ASPHALT WEDGE CURB 804 C800
10' SIDE YARD SETBACK
PROPOSED DOLLAR GENERAL
PROTOTYPE C
GROSS AREA = 9,100 S.F.
SALES AREA = 7,161 S.F.
BUILDING HEIGHT = 18'-0"
F.F.E. = 1347.50
71.33'
12.33'
28'
18' (TYP.)
9' (TYP.)
18'
9'
6
5'
803 C800 INTEGRAL CONCRETE SIDEWALK AND CURB
816 C802 ADA PARKING SIGNS
HANDICAP ACCESSIBLE PARKING AREA
STANDARD DUTY ASPHALT PAVEMENT (TYP. OF PARKING STALLS) 801 C800
8
TYPICAL PAVEMENT MARKINGS 806 C800
R3'
R15'
7
9
13'
8'
10'
8'
9'
R5'
801 C800 HEAVY DUTY ASPHALT PAVEMENT (TYP.)
815 C802
34'
EDGE OF PAVEMENT
804 C800 END ASPHALT WEDGE CURB
R116'
END ASPHALT WEDGE CURB 804 C800
826 C804 PROPOSED GRAVEL STRIP
823 C804 PROPOSED GUIDERAIL
804 C800 START ASPHALT WEDGE CURB
PROPOSED SITE LIGHTING POLE (TYP. 1 OF 2) REFER TO ARCHITECTURAL PLANS
R84'
75' FRONT YARD SETBACK
173.5'
825 C804 PROPOSED CHAIN LINK FENCE
PROPOSED PYLON SIGN (REFER TO ARCHITECTURAL PLANS)
N: 592812.83
E: 1305819.20
TYPICAL PAVEMENT MARKINGS 806 C800
TRAFFIC SIGN (STOP SIGN) 816 C802
32'
4'
24'
EDGE OF PAVEMENT
R30'
START ASPHALT WEDGE CURB 804 C800
130.18'
S 30°36'38" E
125+00
124+00
123+00
122+00
121+00
120+00
CENTERLINE
PERRY HIGHWAY
ROUTE 19
EDGE OF ASPHALT
PT 123+54.18
ASPHALT PAVING
C.BASIN T=1334.76 I=1334.8
C.BASIN T=1328.71 I=1325.9
A=231.86'
R=3854.83'
Δ =3°26'46"
CH BRG= S 28°53'15" E
CH LEN=231.83'
N 17°44'25" W 350.69'
10' REAR YARD SETBACK
601'
PROPOSED TREELINE (TYP.)
EMERGENCY EXIT
DO NOT DISTURB AREA
HEAVY MACHINERY NOT PERMITTED
24'
3.50'
111'
R5'
804 C800 END ASPHALT WEDGE CURB
10' SIDE YARD SETBACK
N 15°55'00" E 420.08'
240-4F135-200A
D.B.V. 2530, PG. 842
5-26-1995
GARY C. LISICA
TO
KIRK D. HOTHAM, et ux
RESIDENTIAL
240-4F135-20
D.B.V. 1413, PG. 22
7-13-1988
DONALD E. WILLIAMS, et ux
TO
EDWARD E. RODGERS, et al
RESIDENTIAL
S 65°45'43" W 460.45'
S 50° 06'17" W 125.00'
240-4F135-20D
D.B.V. 1398, PG. 213
4-28-1988
DENNIS C. RICKARD
TO
JAMES A. BOYD
240-4F135-20DBA
D.B.V. 1590, PG. 167
2-21-1990
CHARLES FRANK McCONNELL
TO
DWIGHT DOUGLAS McCONNELL, et ux
COMMERCIAL
BUILDING
ASPHALT PAVING
OH-E
3-HO
3-HR
G
GAS
UGE
DWG#3868
DWG#3867
DWG#3866
DWG#3865
DWG#3864
DWG#3863
DWG#3862
DWG#3861
DWG#3860
DWG#3859
DWG#3858
DWG#3857
DWG#3856
DWG#3855
DWG#3854
DWG#3853
DWG#3852
DWG#3851
DWG#3850
DWG#3849
DWG#3848
DWG#3847
DWG#3846
DWG#3845
DWG#3844
DWG#3843
DWG#3842
DWG#3841
DWG#3840
DWG#3839
DWG#3838
DWG#3837
DWG#3836
DWG#3835
DWG#3834
DWG#3833
DWG#3832
DWG#3831
DWG#3830
DWG#3829

NORTH

SCALE IN FEET
0 60 120

PROPOSED LIMIT OF DISTURBANCE =2.48 ACRES

PROPOSED NPDES PERMIT BOUNDARY=3.20 ACRES

PROPOSED DOLLAR GENERAL
PROTOTYPE C
GROSS AREA = 9,100 S.F.
SALES AREA = 7,161 S.F.
BUILDING HEIGHT = 18'-0"
F.F.E. = 1347.50

PROPOSED DOLLAR GENERAL
PROTOTYPE C
GROSS AREA = 9,100 S.F.
SALES AREA = 7,161 S.F.
BUILDING HEIGHT = 18'-0"
F.F.E. = 1347.50

DO NOT DISTURB AREA
HEAVY MACHINERY NOT PERMITTED

240-4F135-200A
D.B.V. 2530, PG. 842
5-26-1995
GARY G. LISICA
TO
KIRK D. NOTHAM, et ux
RESIDENTIAL

240-4F135-20
D.B.V. 1413, PG. 22
2-13-1998
DONALD E. WILLIAMS, et ux
TO
EDWARD E. ROGERS, et ux
RESIDENTIAL

240-4F135-200BA
D.B.V. 1590, PG. 167
2-21-1990
CHARLES FRANK McCONNELL
TO
DWIGHT DOUGLAS McCONNELL, et ux
COMMERCIAL

826 C804 NYLOPLAST DRAIN RIM=1347.44 INV IN=1342.50(YD2) INV OUT=1342.30(CB3) — YD1

826 C804 NYLOPLAST DRAIN RIM=1347.45 INV OUT=1344.00(YD1) — YD2

822 C803 GRAVEL PIT TRENCH

138 LF PERFORATED 12" HDPE @ 1.08%

INV.=1342.66
INV.=1343.05
INV.=1343.46
INV.=1343.86

CONNECT DOWNSPOUT TO 12" HDPE COLLECTOR PIPE

TAPER CONCRETE CURB TO LOADING PAD

FOUNDATION DRAIN INV.=1340.53

FOUNDATION DRAIN REFER TO ARCHITECTURAL PLANS

29 LF 12" HDPE @ 8.59%

166 LF 12" HDPE @ 2.89%

808 C801 TYPE M INLET RIM=1341.80 INV OUT=1338.50(CB3) — CB4

808 C801 TYPE M INLET RIM=1341.92 INV IN=1336.00(CB4) INV IN=1337.50(YD1) INV OUT=1335.00(EW1) — CB3

826 C804 PROPOSED GRAVEL STRIP

PROPOSED VESTIBULE DRAIN TO PROPOSED POND AT 1.0% MIN.

EW1 ENDWALL RIM=1333.80 INV IN=1332.20(CB3) — 819 C803

OS1 OUTLET STRUCTURE RIM=1335.81 INV OUT=1328.00(XCB1) — 820 C803

36 LF 12" HDPE @ 7.76%

818 C802 RIPRAP APRON OUTFALL NO. 2

818 C802 RIPRAP APRON OUTFALL NO. 1

EW2 ENDWALL RIM=1333.80 INV IN=1332.20(CB1) — 819 C803

826 C804 FILL FOUNDATION KEY

29 LF 15" RCP @ 1.03%

808 C801 TYPE M INLET RIM=1336.54 INV OUT=1333.60(CB1) — CB2

81 LF 15" RCP @ 1.11%

BIO-RETENTION BASIN — 820 C803

CONCRETE ANTI-SEEP COLLAR — 821 C803

6" PERFORATED UNDERDRAIN @ 1.0% MINIMUM

CB1 TYPE M INLET RIM=1336.29 INV IN=1333.30(CB2) INV OUT=1333.10(EW2) — 808 C801

70 LF 15" RCP @ 2.72%

XCB1 TYPE M INLET RIM=1328.71 INV IN=1326.10(OS1)

PROPOSED GRAVEL STRIP

PERRY HIGHWAY
ROUTE 19

LEGEND

- EXISTING SUBJECT PROPERTY LINE
- EXISTING ADJACENT PROPERTY LINE
- EXISTING RIGHT-OF-WAY
- EXISTING SETBACK LINE
- EXISTING PROPERTY EASEMENT
- EXISTING INDEX CONTOUR
- EXISTING INTERMEDIATE CONTOUR
- EXISTING UNPAVED DRIVEWAY
- EXISTING PAVED ROAD
- EXISTING TREELINE
- EXISTING BUILDING
- OH-E EXISTING OVERHEAD ELECTRICAL LINE
- G EXISTING GAS LINE
- ST EXISTING STORM SEWER LINE
- EXISTING UTILITY POLE
- EXISTING STORM INLET
- EXISTING SOIL UNIT BOUNDARY
- GpC EXISTING SOIL UNIT LABEL
- 1335 PROPOSED INDEX CONTOUR
- 1334 PROPOSED INTERMEDIATE CONTOUR
- 1019.50 PROPOSED SPOT ELEVATION
- TC=1022.50 BC=1022.00 PROPOSED TOP OF CURB ELEVATION / PROPOSED BOTTOM OF CURB ELEVATION
- PROPOSED BUILDING
- PROPOSED CONCRETE SIDEWALK
- PROPOSED HEAVY DUTY CONCRETE
- PROPOSED EDGE OF PAVEMENT
- PROPOSED ASPHALT WEDGE CURB
- PROPOSED CHAIN LINK FENCE
- PROPOSED TIMBER GUIDERAIL
- PROPOSED PYLON SIGN
- PROPOSED DIRECTIONAL TRAFFIC ARROW
- PROPOSED SIGN
- ST PROPOSED FOUNDATION DRAIN
- PROPOSED STORM SEWER PIPE
- UD PROPOSED UNDERDRAIN
- PROPOSED ENDWALL (W/ RIPRAP APRON)
- PROPOSED INLET/CATCH BASIN
- PROPOSED NPDES PERMIT BOUNDARY
- PROPOSED LIMIT OF DISTURBANCE BOUNDARY
- PROPOSED FILL FOUNDATION KEY

NOTES:

1. OVEREXCAVATE TO WEATHERED ROCK FOR PLACEMENT OF BUILDING FOOTINGS. OVEREXCAVATE WEATHERED ROCK TWO (2) FEET AND BACKFILL TO DESIGN BEARING LEVEL OF 2,500 PSF WITH PENNDOT 2A FOR BUILDING FOOTINGS. FOOTINGS SHALL BEAR ON PENNDOT 2A AND APPROVED RESIDUAL SOILS.
2. REFER TO GEOTECHNICAL ENGINEERING SERVICES REPORT, PREPARED BY PROFESSIONAL SERVICES INDUSTRIES, INC. (PSI), DATED JANUARY 3, 2017.
3. AN OPERATION AND MAINTENANCE AGREEMENT BETWEEN THE PROPERTY OWNER AND THE TOWNSHIP HAS BEEN COMPLETED FOR THIS STORMWATER MANAGEMENT PLAN.
4. RECORD DRAWINGS WILL BE PROVIDED FOR ALL THE STORMWATER FACILITIES PRIOR TO OCCUPANCY, OR THE RELEASE OF THE SURETY BOND.
5. THE TOWNSHIP OF MUDDY CREEK OR THEIR DESIGNEE(S) RESERVES THE RIGHT TO ACCESS VIA THE NEAREST PUBLIC RIGHT-OF-WAY TO ALL STORMWATER MANAGEMENT FACILITIES AND STORM WATER CONVEYANCE SYSTEMS LOCATED ON SITE. THIS INCLUDES STORMWATER PIPING.

PROFESSIONAL ENGINEER CERTIFICATION

I, CHRISTOPHER J. REMLEY HEREBY CERTIFY THAT THE STORMWATER MANAGEMENT PLAN MEETS ALL DESIGN STANDARDS AND CRITERIA OF THE MUDDY CREEK TOWNSHIP STORMWATER MANAGEMENT ORDINANCE.

CHRISTOPHER J. REMLEY — 7/19/2017 DATE

MUNICIPAL ENGINEER CERTIFICATION

I, THOMAS L. THOMPSON HAVE REVIEWED THIS STORMWATER MANAGEMENT PLAN IN ACCORDANCE WITH THE DESIGN STANDARDS AND CRITERIA OF THE MUDDY CREEK TOWNSHIP STORMWATER MANAGEMENT ORDINANCE.

THOMAS L. THOMPSON — 8/2/2017 DATE

ONE CALL SERIAL NO.: 20162702202

CALL BEFORE YOU DIG!
PENNSYLVANIA LAW REQUIRES 3 WORKING DAYS NOTICE FOR CONSTRUCTION PHASE AND 10 WORKING DAYS IN DESIGN STAGE—STOP CALL PENNSYLVANIA ONE CALL SYSTEM, INC.
1-800-242-1776

PENNSYLVANIA ACT 38 (1991) REQUIRES NO LESS THAN 3 WORKING DAYS NOTICE NOR MORE THAN 10 WORKING DAYS NOTICE FROM EXCAVATORS WHO ARE ABOUT TO: DIG, DRILL, BLAST, AUGER, BORE, GRADE, TRENCH, OR DEMOLISH WHEN IN THE CONSTRUCTION PHASE. FOR LOCATION REQUESTS IN THE STATE OF PENNSYLVANIA, CALL TOLL FREE 1-800-242-1776. UNDERGROUND UTILITIES HAVE BEEN PLOTTED FROM AVAILABLE INFORMATION AND THE LOCATION MUST BE CONSIDERED APPROXIMATE. OTHER UNDERGROUND UTILITIES MAY EXIST WHICH ARE NOT SHOWN. IT WILL BE THE CONTRACTOR'S RESPONSIBILITY TO ASCERTAIN ALL PHYSICAL LOCATIONS OF UTILITY LINES PRIOR TO THE TIME OF CONSTRUCTION. IN NO WAY SHALL THE CONTRACTOR HOLD THE SURVEYOR RESPONSIBLE FOR ANY UTILITY LOCATION SHOWN ON THIS PLAN.

*HAND SIGNATURE ON FILE

COMMONWEALTH OF PENNSYLVANIA — REGISTERED PROFESSIONAL — CHRISTOPHER J. REMLEY — ENGINEER NO. 079900

REFERENCE

1. VERTICAL DATUM IS BASED UPON NAVD88, AS DETERMINED BY CIVIL & ENVIRONMENTAL CONSULTANTS, INC., USING SURVEY GRADE GPS MEASUREMENTS AND OPUS POST-PROCESSING.
2. FIELD SURVEY BY CIVIL & ENVIRONMENTAL CONSULTANTS, INC. DATED 09/27/2016.

OFF-SITE RECEIVING WATERS OF THE COMMONWEALTH

TRIBUTARY 63811 TO MUDDY CREEK — WARM WATER FISHES (WWF)

REFERENCE: CHAPTER 93 WATER QUALITY STANDARDS, DEPARTMENT OF ENVIRONMENTAL PROTECTION, TITLE 25 ENVIRONMENTAL RESOURCES, COMMONWEALTH OF PENNSYLVANIA

SITE SOIL CLASSIFICATION TABLE

SYMBOL	SOIL TYPE	HSG
CIB	CAVODE SILT LOAM, 3-8% SLOPES	C/D
GpC	GILPIN-WHARTON SILT LOAMS, 8-15% SLOPES	C
UeB	URBAN LAND-ERNEST COMPLEX, 0-8% SLOPES	D
WoB	WHARTON SILT LOAM, 3-8% SLOPES	C/D

PLAN BOOK	PAGE
365	20

SCALE IN FEET
0 20 40

SUBMITTAL & REVISION RECORD

NO	DATE	DESCRIPTION
1	06/12/2017	LAND DEVELOPMENT SUBMISSION #1 TO MUDDY CREEK TOWNSHIP
2	06/21/2017	NPDES SUBMISSION #1 TO BUTLER COUNTY CONSERVATION DISTRICT
3	06/28/2017	RESPONSE TO COMMENTS FROM ENGINEER DATED 06/26/2017
4	06/28/2017	HART FIELD PRELIMINARY CIVIL SET SUBMISSION
5	06/30/2017	RESPONSE TO COMMENTS SUBMISSION TO BCCD DATED 5/14/2017
6	04/30/2017	FINAL LAND DEVELOPMENT PLAN SET SUBMISSION TO MUDDY CREEK TOWNSHIP
7	05/15/2017	RESPONSE TO COMMENTS FROM PTV DATED 05/01/2017 & FINAL SUBMISSION TO BCCD FOR NPDES PERMIT
8	07/19/2017	FINAL LAND DEVELOPMENT PLAN SET SUBMISSION TO MUDDY CREEK TOWNSHIP

Civil & Environmental Consultants, Inc.
333 Baldwin Road · Pittsburgh, PA 15205
412-429-2324 · 800-365-2324
www.cecinc.com

PTV XX, LLC
PORTERSVILLE DOLLAR GENERAL STORE
MUDDY CREEK TOWNSHIP
BUTLER COUNTY, PENNSYLVANIA

GRADING AND POST-CONSTRUCTION STORMWATER MANAGEMENT PLAN

DATE:	FEBRUARY 15, 2017	DRAWN BY:	EJB DMO
DWG SCALE:	AS SHOWN	CHECKED BY:	*CJR
PROJECT NO:			163-826
APPROVED BY:			*CPQ

DRAWING NO.: C300
SHEET 8 OF 21

P:\2016\163-826\1-CAD\3wg\CVR1\163826-CVR1-C300.dwg[C300] LS(7/15/2017 - alesley) - LP: 7/17/2017 4:08 PM

CONSTRUCTION/PROJECT WASTE RECYCLING/DISPOSAL

CONSTRUCTION WASTES ARE REFUSE MATERIALS THAT ARE EXISTING ON-SITE OR GENERATED DURING THE COURSE OF CONSTRUCTION AND INCLUDE, BUT ARE NOT LIMITED TO, PAPER, PLASTIC, RUBBER, CONCRETE WASTE WASH, GRASS CLIPPINGS, LEAF LITTER, WOOD, TEXTILE, AND METAL PRODUCTS.

INSTALLATION: THE CONTRACTOR SHALL BE RESPONSIBLE FOR IDENTIFYING WASTE RECYCLING/DISPOSAL AREAS ON THE E&S PLAN ONCE THEY HAVE BEEN DETERMINED. THE CONTRACTOR SHALL BE RESPONSIBLE FOR OBTAINING ALL WASTE RECYCLING/DISPOSAL PERMITS PRIOR TO THE COMMENCEMENT OF CONSTRUCTION ACTIVITIES.

MAINTENANCE: ALL CONSTRUCTION WASTE SHALL BE REMOVED BY THE CONTRACTOR AND DISPOSED/RECYCLED OF AT A STATE-APPROVED WASTE SITE AND/OR STATE APPROVED LANDFILL AND IN ACCORDANCE WITH ALL LOCAL/STATE CODES, PERMIT REQUIREMENTS, AND REGULATIONS. THE BURNING OF WASTE MATERIALS WILL NOT BE PERMITTED.

STORMWATER BMP MAINTENANCE PROGRAM

TO PROVIDE EFFECTIVE AND CONTINUED OPERATION OF ALL STORMWATER MANAGEMENT FACILITIES, THE FOLLOWING MAINTENANCE PROGRAM HAS BEEN DEVELOPED FOR THE PROPOSED DOLLAR GENERAL STORE. MAINTENANCE OPERATIONS AND CORRECTIVE ACTIONS SHALL INCLUDE, BUT NOT BE LIMITED TO THOSE LISTED BELOW AND SHALL BE THE RESPONSIBILITY OF THE PROPERTY OWNER. THIS RECOMMENDED MAINTENANCE PROGRAM SHALL NOT BE CONSIDERED AS A GUARANTEE FOR THE CONTINUED FUNCTIONING OF THE STORMWATER FACILITIES NOW OR IN THE FUTURE.

SEMI-ANNUAL INSPECTIONS SHALL BE CONDUCTED BY A MINIMUM OF TWO (2) PERSONS, ON OR BEFORE MARCH 1ST AND OCTOBER 1ST, OR AFTER RUNOFF EVENTS IN EXCESS OF ONE INCH OF RAINFALL. ADDITIONAL INSPECTIONS WILL BE REQUIRED IF IT BECOMES APPARENT THAT FACILITIES ARE NOT FUNCTIONING PROPERLY. CORRECTIVE ACTIONS SHALL BE TAKEN AS REQUIRED TO PROVIDE CONTINUING OPERATION OF STORMWATER FACILITIES. OWNER INSPECTIONS, NOTED DEFICIENCIES AND CORRECTIVE ACTIONS TAKEN SHALL BE RECORDED AND DOCUMENTED BY THE OWNER. CORRECTIVE ACTION RECORDED SHALL BE FILED WITH THE MUNICIPALITY WITHIN FOURTEEN (14) CALENDAR DAYS OF ACTIONS TAKEN. INDICATE WHETHER ACTIONS TAKEN RETURNED MALFUNCTIONING STORMWATER FACILITIES TO THEIR ORIGINAL, INTENDED STATE OF OPERATION.

THE MUNICIPALITY MAY REQUIRE ADDITIONAL ITEMS BE INCLUDED IN THE FORM OF AN AGREEMENT. THESE ITEMS SHALL BE CONSIDERED TO BE NECESSARY AND COMPLIMENTARY TO THIS MAINTENANCE PROGRAM IN ORDER TO PROVIDE SATISFACTORY PERFORMANCE OF THE STORMWATER FACILITIES. IF THE OWNER FAILS TO MAINTAIN THE STORMWATER FACILITIES FOLLOWING DUE NOTICE BY THE MUNICIPALITY TO CORRECT THE DEFICIENCIES, THE MUNICIPALITY MAY PERFORM THE NECESSARY MAINTENANCE AND/OR CORRECTIVE ACTIONS. THE OWNER SHALL REIMBURSE THE MUNICIPALITY FOR ALL COSTS ASSOCIATED WITH THE ACTIONS TAKEN.

STORMWATER FACILITIES REQUIRING INSPECTION
- STORM SEWERS, SWALES, CULVERTS, UNDERDRAINS AND OTHER CONVEYANCE DEVICES.
- CATCH BASINS (INLETS), YARD DRAINS, RISERS AND OTHER CATCHMENT STRUCTURES.
- MANHOLES AND/OR OTHER TRANSITIONAL STRUCTURES.
- DETENTION FACILITIES (ABOVE OR BELOW GROUND), PONDS, BIO-RETENTION AREAS AND OTHER DETENTION/RETENTION BMPS.

GENERAL MAINTENANCE AND CORRECTIVE ACTION PLAN
- REPLACE OR REPAIR FACILITIES SO AS TO REMAIN FUNCTIONING AS INTENDED.
- ALL INLETS SHOULD BE INSPECTED A MINIMUM OF FOUR (4) TIMES PER YEAR. REMOVE SEDIMENT, DEBRIS, AND LITTER THAT MAY INHIBIT FLOW FROM CATCHMENT STRUCTURES AND CONVEYANCE DEVICES. THAT WHICH IS REMOVED FROM THE FACILITIES SHALL BE DISPOSED OF IN AN APPROPRIATE LOCATION IN ACCORDANCE WITH THE LOCAL AND STATE CODES. UNDER NO CIRCUMSTANCE SHALL SEDIMENT, DEBRIS, OR LITTER BE DISPOSED OF IN OR NEAR WATERS OF THE COMMONWEALTH.
- REPLACE ERODED MATERIAL AND RE-VEGETATE ERODED AREAS WITH THE APPROVED SEED MIXTURE AS SPECIFIED BY DESIGN PLAN OR APPROVED LOCAL PADEP MIXTURE WITH FERTILIZERS AND SOIL AMENDMENTS. NEWLY SEEDED SLOPED AREAS (SLOPE GREATER THAN 3H:1V) SHOULD BE COVERED WITH APPROVED EROSION CONTROL FABRIC- MULCH OR STRAW SHOULD NOT BE USED.
- STREET SWEEPING SHALL BE PERFORMED AT THE COMPLETION OF CONSTRUCTION AND AS DEEMED NECESSARY DURING INLET INSPECTIONS.

SITE SPECIFIC BMP MAINTENANCE ITEM
1. INSPECT THE BIO-RETENTION BASIN A MINIMUM OF TWO (2) TIMES PER YEAR. KEEP FACILITY FREE OF DEBRIS THAT MAY INTERFERE WITH THE DISCHARGE OF WATER.

CONSTRUCTION STAGING GENERAL NOTES

1. AT LEAST THREE (3) DAYS PRIOR TO STARTING ANY EARTH DISTURBANCE ACTIVITIES, OR EXPANDING INTO AN AREA PREVIOUSLY UNMARKED, THE PENNSYLVANIA ONE CALL SYSTEM INC. SHALL BE NOTIFIED AT 1-800-242-1776 FOR THE LOCATION OF EXISTING UNDERGROUND UTILITIES.
2. ALL EARTH DISTURBANCE ACTIVITIES SHALL PROCEED IN ACCORDANCE WITH THE SEQUENCE PROVIDED ON THE PLAN DRAWINGS. DEVIATION FROM THAT SEQUENCE MUST BE APPROVED BY THE BUTLER COUNTY CONSERVATION DISTRICT OR BY THE DEPARTMENT PRIOR TO IMPLEMENTATION. EACH STEP OF THE SEQUENCE SHALL BE COMPLETED BEFORE PROCEEDING TO THE NEXT STEP, EXCEPT WHERE NOTED.
3. IMMEDIATELY STABILIZE ALL DISTURBED AREAS UPON A TEMPORARY CESSATION OF WORK (4 DAYS OR MORE) OR AS SOON AS ANY GRADED AREA REACHES FINAL GRADE.
4. AS SOON AS SLOPES, CHANNELS, PONDS AND OTHER DISTURBED AREAS REACH FINAL GRADE THEY MUST BE PERMANENTLY STABILIZED. NO MORE THAN 15,000 SQUARE FEET OF DISTURBED AREA SHALL REACH FINAL GRADE BEFORE INITIATING SEEDING AND MULCHING OPERATIONS.
5. AVOIDANCE MEASURE SHALL BE TAKEN TO CONDUCT ANY TREE CUTTING, TREE INUNDATION (FLOODING), AND PRESCRIBED BURNING BETWEEN NOVEMBER 15 AND MARCH 31.

TYPE SLOPE AND EXTENT OF SOILS

ACCORDING TO THE SOIL CLASSIFICATION INFORMATION COMPILED FROM THE USDA WEB SOIL SURVEY, THE PROPOSED PROJECT'S LIMIT OF DISTURBANCE IS LOCATED IN A PARTIALLY DEVELOPED AREA WITH FOUR (4) DIFFERENT SOIL TYPES PRESENT. REFER TO THE SOILS MAP PROVIDED IN APPENDIX A. THE SOIL TYPES AND GENERAL LIMITATIONS AND CHARACTERISTICS ARE AS FOLLOWS:

CIB – CAVODE SILT LOAM, 3 TO 8 PERCENT SLOPES: THIS SOIL IS ON RIDGES. THE PARENT MATERIAL CONSISTS OF ACID CLAYEY RESIDUUM WEATHERED FROM CLAYEY SHALE. DEPTH TO A RESTRICTIVE FEATURE IS APPROXIMATELY 40 TO 80 INCHES TO LITHIC BEDROCK. THE NATURAL DRAINAGE CLASS IS SOMEWHAT POORLY DRAINED. WATER MOVEMENT IN THE MOST RESTRICTIVE LAYER IS MODERATELY LOW TO MODERATELY HIGH. DEPTH TO WATER TABLE IS ABOUT 6 TO 18 INCHES AND THE AVAILABLE WATER STORAGE IN PROFILE IS HIGH (ABOUT 9.4 INCHES). THIS SOIL IS NOT FLOODED. IT IS NOT PONDED.

GpC – GILPIN-WHARTON SILT LOAMS, 8 TO 15 PERCENT SLOPES: THIS SOIL IS ON HILLS. THE PARENT MATERIAL CONSISTS OF RESIDUUM WEATHERED FROM ACID FINE-GRAINED SANDSTONE, SILTSTONE, AND SHALE. DEPTH TO A RESTRICTIVE FEATURE IS 20 TO 40 INCHES TO LITHIC BEDROCK. THE NATURAL DRAINAGE CLASS IS WELL DRAINED. WATER MOVEMENT IN THE MOST RESTRICTIVE LAYER IS MODERATELY HIGH TO HIGH. DEPTH TO WATER TABLE IS MORE THAN 80 INCHES AND THE AVAILABLE WATER STORAGE IN PROFILE IS LOW (ABOUT 4.9 INCHES). THIS SOIL IS NOT FREQUENTLY FLOODED. IT IS NOT PONDED.

UeB – URBAN LAND-ERNEST COMPLEX, 0 TO 8 PERCENT SLOPES: THIS MATERIAL HAS BEEN TRANSPORTED BY HUMANS. THE PARENT MATERIAL CONSISTS OF COLLUVIUM DERIVED FROM ACID SHALE AND SILTSTONE. DEPTH TO A RESTRICTIVE FEATURE IS APPROXIMATELY 20 TO 36 INCHES TO FRAGIPAN. THE NATURAL DRAINAGE CLASS IS MODERATELY WELL DRAINED. WATER MOVEMENT IN THE MOST RESTRICTIVE LAYER IS MODERATELY LOW TO MODERATELY HIGH. DEPTH TO WATER TABLE IS ABOUT 17 TO 22 INCHES AND THE AVAILABLE WATER STORAGE IN PROFILE IS LOW (ABOUT 3.5 INCHES). THIS SOIL IS NOT FLOODED. IT IS NOT PONDED.

WoB – WHARTON SILT LOAM, 3 TO 8 PERCENT SLOPES: THIS SOIL IS ON HILLS. THE PARENT MATERIAL CONSISTS OF FINE-LOAMY RESIDUUM WEATHERED FROM SHALE AND SILTSTONE. DEPTH TO A RESTRICTIVE FEATURE IS 40 TO 71 INCHES TO PARALITHIC BEDROCK. THE NATURAL DRAINAGE CLASS IS MODERATELY WELL DRAINED. WATER MOVEMENT IN THE MOST RESTRICTIVE LAYER IS VERY LOW. DEPTH TO WATER TABLE IS ABOUT 16 TO 28 UBCGES AND THE AVAILABLE WATER STORAGE IN PROFILE IS HIGH (ABOUT 9.5 INCHES). THIS SOIL IS NOT FLOODED. IT IS NOT PONDED.

LIMITATIONS AND RESOLUTIONS:
1. CUTBANKS CAVE:
   - KEEP EXCAVATIONS AS SHALLOW AS PRACTICAL.
   - TRENCHES SHALL BE EXCAVATED WITH APPROPRIATE LAYBACK BANKS TO PREVENT CAVE-INS; DEEP TRENCHES ARE TO BE SHORED.
   - CONSULT OSHA STANDARDS AND REGULATIONS TO ENSURE WORKER PROTECTION DURING ALL EXCAVATION WORK.
2. DROUGHTY:
   - AMEND SOIL WITH COMPOST TO INCREASE MOISTURE CONTENT AND ABILITY TO SUSTAIN EROSION RESISTANT VEGETATION. AMENDMENTS REQUIRED WITH EACH VEGETATIVE STABILIZATION MIX ARE SPECIFIED ON THE DESIGN PLANS, NOTES, AND DETAILS.
3. CORROSIVE TO CONCRETE/STEEL:
   - IN AREAS WHERE CONCRETE IS TO COME INTO DIRECT CONTACT WITH THE SOIL, LIME SHALL BE MIXED INTO THE SOIL TO A DEPTH OF 6" MINIMUM.
   - PROPOSED SUBSURFACE CONCRETE AND STEEL WILL BE SEALED OR COATED WITH CORROSIVE-RESISTANT MATERIAL.
4. EASILY ERODIBLE:
   - EROSION CONTROL BLANKETS, SILT SOCKS, TEMPORARY AND PERMANENT SEEDING, AND DIVERSION CHANNELS SHALL BE USED TO MINIMIZE EROSION.
5. FLOODING:
   - ANY GROUNDWATER ENCOUNTERED SHALL BE PUMPED OUT OF THE EXCAVATION USING A PUMPED WATER FILTER BAG.
6. DEPTH TO SATURATED ZONE/SEASONAL HIGH WATER TABLE:
   - KEEP EXCAVATIONS AS SHALLOW AS PRACTICAL.
   - CONSTRUCT DURING DRY WEATHER.
   - ANY GROUNDWATER ENCOUNTERED SHALL BE PUMPED OUT OF THE EXCAVATION USING A PUMPED WATER FILTER BAG.
   - CONSTRUCT SUBSURFACE DRAINS TO CONTROL AND DISCHARGE WATER FROM FILL SLOPES.
7. HYDRIC/HYDRIC INCLUSIONS:
   - SEE WETLAND DELINEATION REPORT.
8. LOW STRENGTH/LANDSLIDE PRONE:
   - AVOID OVER-STEEPENING AND OVERLOADING OF SLOPES, REMOVAL OF LATERAL SUPPORT, AND SATURATION OF SLOPES TO PREVENT FAILURE.
   - NEW FILL MATERIAL SHALL BE PROPERLY PLACED AND COMPACTED. FILL PLACEMENT SHALL NOT OCCUR ATOP SATURATED SOILS.
9. SLOW PERCOLATION:
   - AVOID DESIGN OF INFILTRATION STRUCTURE WITHOUT PROPER INFILTRATION TESTING.
10. PIPING:
   - INSTALL PROPERLY DESIGNED ANTI-SEEP COLLARS OR TRENCH PLUGS ON PIPES IN ACCORDANCE WITH PADEP STANDARDS.
11. POOR SOURCE OF TOPSOIL:
   - AMEND SOIL WITH COMPOST TO INCREASE MOISTURE CONTENT AND ABILITY TO SUSTAIN EROSION RESISTANT VEGETATION. AMENDMENTS REQUIRED WITH EACH VEGETATIVE STABILIZATION MIX ARE SPECIFIED ON THE DESIGN PLANS, NOTES, AND DETAILS.
12. FROST ACTION:
   - ENSURE PROPER PROTECTION FROM DAMAGE, ESPECIALLY TO ROADWAYS.
   - INCREASES THE PAVEMENT THICKNESS TO ACCOUNT FOR THE DAMAGE AND LOSS OF SUPPORT CAUSED BY FROST ACTION.
   - REMOVE FROST-SUSCEPTIBLE SUBGRADE SOILS DOWN TO THE TYPICAL FROST DEPTH (AT A MINIMUM).
13. SHRINK AND SWELL:
   - EXPANSIVE SOILS ARE TO BE AMENDED OR REMOVED AND NEW NON-EXPANSIVE MATERIAL IS TO BE IMPORTED AND COMPACTED TO CREATE A STABLE LAYER OF SOIL.
14. WETNESS:
   - ANY GROUNDWATER ENCOUNTERED SHALL BE PUMPED OUT OF THE EXCAVATION USING A PUMPED WATER FILTER BAG.
   - CONSTRUCT SUBSURFACE DRAINS TO CONTROL AND DISCHARGE WATER FROM FILL SLOPES.
15. POTENTIAL SINKHOLE:
   - AVOID OVER-STEEPENING, OVERLOADING, AND SATURATION OF SOILS TO PREVENT FAILURE.
16. PONDING:
   - ANY GROUNDWATER ENCOUNTERED SHALL BE PUMPED OUT OF THE EXCAVATION USING A PUMPED WATER FILTER BAG.
   - CONSTRUCT SUBSURFACE DRAINS TO CONTROL AND DISCHARGE WATER FROM FILL SLOPES.
17. TRENCHING:
   - TRENCHES SHALL BE EXCAVATED WITH APPROPRIATE LAYBACK BANKS TO PREVENT CAVE-INS. STOCKPILES SHALL BE LOCATED AT A SUFFICIENT DISTANCE AWAY FROM THE TRENCH.
   - ANY GROUNDWATER ENCOUNTERED SHALL BE PUMPED OUT OF THE EXCAVATION USING A PUMPED WATER FILTER BAG.
   - DEEP TRENCHES ARE TO BE SHORED TO PREVENT CAVING. CONSULT OSHA STANDARDS AND REGULATIONS.
   - TRENCHES WILL BE BACKFILLED WITH COMPACTED STONE AND/OR COMPACTED SUITABLE MATERIAL REMOVED FROM THE TRENCH.
18. SOIL COMPACTION:
   - MINIMIZE SOIL COMPACTION TO THE FULLEST EXTENT POSSIBLE IN ALL PROPOSED UNIMPROVED AREAS AND BIO-RETENTION STORMWATER MANAGEMENT BMP AREAS.

FOR ADDITIONAL INFORMATION PERTAINING TO THE LIMITATION AND RESOLUTIONS OF THE EXISTING ONSITE SOILS, PLEASE REFER TO THE GEOTECHNICAL ENGINEERING SERVICES REPORT, PREPARED BY PROFESSIONAL SERVICE INDUSTRIES, INC. (PSI), DATED JANUARY 3, 2017.

NATURALLY OCCURRING GEOLOGICAL FORMATIONS

A REVIEW OF THE INFORMATION CONTAINED ON THE UNITED STATES DEPARTMENT OF INTERIOR GEOLOGIC SURVEY (USGS) WEB SITE INDICATES THAT THE BEDROCK UNITS UNDERLYING THE PROJECT SITE BELONG TO THE ALLEGHENY FORMATION. THIS FORMATION IS PENNSYLVANIAN IN AGE AND INCLUDES CYCLIC SEQUENCES OF SANDSTONE, SHALE, LIMESTONE, CLAY, AND COAL. THE FORMATION INCLUDES CLAY DEPOSITS AND THE VANPORT LIMESTONE AS WELL AS COMMERCIALLY VALUABLE COAL OF THE FREEPORT, KITTANNING, AND BROOKVILLE-CLARION SEAMS. THE BASE OF THE FORMATION IS AT THE BOTTOM OF THE BROOKVILLE-CLARION COAL SEAM.

AVAILABLE MINING RECORDS REVIEWED FOR THIS SITE INCLUDED USGS HISTORICAL TOPOGRAPHIC MAPS, THE PENNSYLVANIA GEOLOGICAL SURVEY (PAGS) "COAL RESOURCES OF BUTLER COUNTY PART 1. COAL. THE COAL STATUS REPORT FROM THE PADEP DISTRICT MINING OPERATIONS INDICATES THE SITE IS LOCATED ON AN UNMINED SECTION OF THE LOWER FREEPORT COAL SEAM WITH A REPORTED ELEVATION OF EL 1340 FEET, NAVD. THE REPORT STATES THE AREA APPROXIMATELY 820 FEET SOUTH OF THE PROPERTY HAS BEEN SURFACE MINED. USGS 7.5-MINUTE QUADRANGLE AND PAGS 1985 MAPPING INDICATES SURFACE MINING AT ROUGHLY 800 FEET WEST AND SOUTHWEST OF THE PROPERTY.

NEITHER PAGS NOR THE PADEP/PSU WEBSITE MAPPING INDICATE DEEP MINING BELOW THE PROPERTY.

ACCORDING TO THE GEOTECHNICAL ENGINEERING SERVICES REPORT PREPARED BY PROFESSIONAL SERVICE INDUSTRIES, DATED 01/03/2017, THERE ARE NO KNOWN POTENTIAL'S FROM GEOLOGIC FORMATIONS OR SOIL CONDITIONS TO CAUSE POLLUTION DURING EARTH DISTURBANCE ACTIVITIES. DUE TO LIMITING LAYERS TO BEDROCK, INFILTRATION TESTING HAS NOT BEEN COMPLETED.

INDIVIDUAL BMP CONSTRUCTION SEQUENCE

1. SEE STEPS 1-11 IN THE EROSION AND SEDIMENTATION CONTROL CONSTRUCTION SEQUENCE FOR PRIOR CONSTRUCTION STEPS.
2. CONTACT CEC PRIOR TO BEGINNING CONSTRUCTION OF THE BIO-RETENTION BASIN. A LICENSED PROFESSIONAL IN THE COMMONWEALTH OF PENNSYLVANIA MUST BE PRESENT ONSITE TO OBSERVE THE CRITICAL STAGES OF CONSTRUCTION FOR THE BIO-RETENTION BASIN.
3. EXCAVATE TO THE DIMENSIONS AND ELEVATIONS REQUIRED FOR THE BIO-RETENTION BASIN. SMOOTH IRREGULARITIES IN THE EXCAVATION AND CLEAR ANY LARGE ROCKS OR DEBRIS FROM THE BOTTOM OF THE BED. TAKE CARE WHILE EXCAVATING TO AVOID COMPACTING THE UNDERLYING SOILS WHERE INFILTRATION MAY OCCUR. MEASURES SHOULD BE TAKEN TO PREVENT WATER AND SEDIMENT FROM ENTERING THE EXCAVATED AREA.
4. INSTALL OUTLET STRUCTURE AND ASSOCIATED STORMWATER CONVEYANCE PIPES AND CATCH BASINS. ANY DAMAGES TO EXISTING PAVEMENT, DRAINAGE STRUCTURES, AND CONVEYANCE PIPES INVOLVED WITH INSTALLING THE OUTLET STRUCTURE SHALL BE REPLACED IN KIND.
5. INSTALL UNDERDRAIN AS SHOWN ON THE PLANS AN IN ACCORDANCE WITH THE STANDARD DETAIL. PLACE SUBSURFACE DRAINAGE GEOTEXTILE ON THE BOTTOM AND SIDES OF THE EXCAVATED AREA SUCH THAT NATIVE SOILS DO NOT MIGRATE INTO THE STONE BEDDING.
6. INSTALL BIO-RETENTION SOIL MIX AS DEPICTED IN THE PLANS.

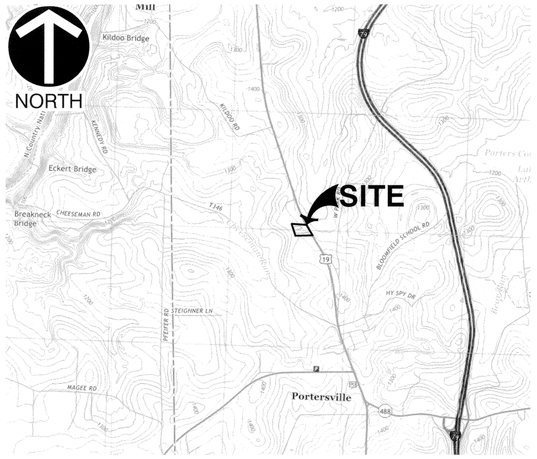
NORTH
Killdoo Bridge
Eckert Bridge
Breakneck Bridge
SITE
Portersville
Porters Cut
BLOOMFIELD SCHOOL RD
HY SPY DR
STEIGNER LN
MAGEE RD
KREMESEMAN RD
PFEIFER RD
T 646
T 648
T 649
T 650
T 651
T 652
T 653
T 654
T 655
T 656
T 657
T 658
T 659
T 660
T 661
T 662
T 663
T 664
T 665
T 666
T 667
T 668
T 669
T 670
T 671
T 672
T 673
T 674
T 675
T 676
T 677
T 678
T 679
T 680
T 681
T 682
T 683
T 684
T 685
T 686
T 687
T 688
T 689
T 690
T 691
T 692
T 693
T 694
T 695
T 696
T 697
T 698
T 699
T 700
T 701
T 702
T 703
T 704
T 705
T 706
T 707
T 708
T 709
T 710
T 711
T 712
T 713
T 714
T 715
T 716
T 717
T 718
T 719
T 720
T 721
T 722
T 723
T 724
T 725
T 726
T 727
T 728
T 729
T 730
T 731
T 732
T 733
T 734
T 735
T 736
T 737
T 738
T 739
T 740
T 741
T 742
T 743
T 744
T 745
T 746
T 747
T 748
T 749
T 750
T 751
T 752
T 753
T 754
T 755
T 756
T 757
T 758
T 759
T 760
T 761
T 762
T 763
T 764
T 765
T 766
T 767
T 768
T 769
T 770
T 771
T 772
T 773
T 774
T 775
T 776
T 777
T 778
T 779
T 780
T 781
T 782
T 783
T 784
T 785
T 786
T 787
T 788
T 789
T 790
T 791
T 792
T 793
T 794
T 795
T 796
T 797
T 798
T 799
T 800
T 801
T 802
T 803
T 804
T 805
T 806
T 807
T 808
T 809
T 810
T 811
T 812
T 813
T 814
T 815
T 816
T 817
T 818
T 819
T 820
T 821
T 822
T 823
T 824
T 825
T 826
T 827
T 828
T 829
T 830
T 831
T 832
T 833
T 834
T 835
T 836
T 837
T 838
T 839
T 840
T 841
T 842
T 843
T 844
T 845
T 846
T 847
T 848
T 849
T 850
T 851
T 852
T 853
T 854
T 855
T 856
T 857
T 858
T 859
T 860
T 861
T 862
T 863
T 864
T 865
T 866
T 867
T 868
T 869
T 870
T 871
T 872
T 873
T 874
T 875
T 876
T 877
T 878
T 879
T 880
T 881
T 882
T 883
T 884
T 885
T 886
T 887
T 888
T 889
T 890
T 891
T 892
T 893
T 894
T 895
T 896
T 897
T 898
T 899
T 900
T 901
T 902
T 903
T 904
T 905
T 906
T 907
T 908
T 909
T 910
T 911
T 912
T 913
T 914
T 915
T 916
T 917
T 918
T 919
T 920
T 921
T 922
T 923
T 924
T 925
T 926
T 927
T 928
T 929
T 930
T 931
T 932
T 933
T 934
T 935
T 936
T 937
T 938
T 939
T 940
T 941
T 942
T 943
T 944
T 945
T 946
T 947
T 948
T 949
T 950
T 951
T 952
T 953
T 954
T 955
T 956
T 957
T 958
T 959
T 960
T 961
T 962
T 963
T 964
T 965
T 966
T 967
T 968
T 969
T 970
T 971
T 972
T 973
T 974
T 975
T 976
T 977
T 978
T 979
T 980
T 981
T 982
T 983
T 984
T 985
T 986
T 987
T 988
T 989
T 990
T 991
T 992
T 993
T 994
T 995
T 996
T 997
T 998
T 999
T 1000
T 1001
T 1002
T 1003
T 1004
T 1005
T 1006
T 1007
T 1008
T 1009
T 1010
T 1011
T 1012
T 1013
T 1014
T 1015
T 1016
T 1017
T 1018
T 1019
T 1020
T 1021
T 1022
T 1023
T 1024
T 1025
T 1026
T 1027
T 1028
T 1029
T 1030
T 1031
T 1032
T 1033
T 1034
T 1035
T 1036
T 1037
T 1038
T 1039
T 1040
T 1041
T 1042
T 1043
T 1044
T 1045
T 1046
T 1047
T 1048
T 1049
T 1050
T 1051
T 1052
T 1053
T 1054
T 1055
T 1056
T 1057
T 1058
T 1059
T 1060
T 1061
T 1062
T 1063
T 1064
T 1065
T 1066
T 1067
T 1068
T 1069
T 1070
T 1071
T 1072
T 1073
T 1074
T 1075
T 1076
T 1077
T 1078
T 1079
T 1080
T 1081
T 1082
T 1083
T 1084
T 1085
T 1086
T 1087
T 1088
T 1089
T 1090
T 1091
T 1092
T 1093
T 1094
T 1095
T 1096
T 1097
T 1098
T 1099
T 1100
T 1101
T 1102
T 1103
T 1104
T 1105
T 1106
T 1107
T 1108
T 1109
T 1110
T 1111
T 1112
T 1113
T 1114
T 1115
T 1116
T 1117
T 1118
T 1119
T 1120
T 1121
T 1122
T 1123
T 1124
T 1125
T 1126
T 1127
T 1128
T 1129
T 1130
T 1131
T 1132
T 1133
T 1134
T 1135
T 1136
T 1137
T 1138
T 1139
T 1140
T 1141
T 1142
T 1143
T 1144
T 1145
T 1146
T 1147
T 1148
T 1149
T 1150
T 1151
T 1152
T 1153
T 1154
T 1155
T 1156
T 1157
T 1158
T 1159
T 1160
T 1161
T 1162
T 1163
T 1164
T 1165
T 1166
T 1167
T 1168
T 1169
T 1170
T 1171
T 1172
T 1173
T 1174
T 1175
T 1176
T 1177
T 1178
T 1179
T 1180
T 1181
T 1182
T 1183
T 1184
T 1185
T 1186
T 1187
T 1188
T 1189
T 1190
T 1191
T 1192
T 1193
T 1194
T 1195
T 1196
T 1197
T 1198
T 1199
T 1200
T 1201
T 1202
T 1203
T 1204
T 1205
T 1206
T 1207
T 1208
T 1209
T 1210
T 1211
T 1212
T 1213
T 1214
T 1215
T 1216
T 1217
T 1218
T 1219
T 1220
T 1221
T 1222
T 1223
T 1224
T 1225
T 1226
T 1227
T 1228
T 1229
T 1230
T 1231
T 1232
T 1233
T 1234
T 1235
T 1236
T 1237
T 1238
T 1239
T 1240
T 1241
T 1242
T 1243
T 1244
T 1245
T 1246
T 1247
T 1248
T 1249
T 1250
T 1251
T 1252
T 1253
T 1254
T 1255
T 1256
T 1257
T 1258
T 1259
T 1260
T 1261
T 1262
T 1263
T 1264
T 1265
T 1266
T 1267
T 1268
T 1269
T 1270
T 1271
T 1272
T 1273
T 1274
T 1275
T 1276
T 1277
T 1278
T 1279
T 1280
T 1281
T 1282
T 1283
T 1284
T 1285
T 1286
T 1287
T 1288
T 1289
T 1290
T 1291
T 1292
T 1293
T 1294
T 1295
T 1296
T 1297
T 1298
T 1299
T 1300
T 1301
T 1302
T 1303
T 1304
T 1305
T 1306
T 1307
T 1308
T 1309
T 1310
T 1311
T 1312
T 1313
T 1314
T 1315
T 1316
T 1317
T 1318
T 1319
T 1320
T 1321
T 1322
T 1323
T 1324
T 1325
T 1326
T 1327
T 1328
T 1329
T 1330
T 1331
T 1332
T 1333
T 1334
T 1335
T 1336
T 1337
T 1338
T 1339
T 1340
T 1341
T 1342
T 1343
T 1344
T 1345
T 1346
T 1347
T 1348
T 1349
T 1350
T 1351
T 1352
T 1353
T 1354
T 1355
T 1356
T 1357
T 1358
T 1359
T 1360
T 1361
T 1362
T 1363
T 1364
T 1365
T 1366
T 1367
T 1368
T 1369
T 1370
T 1371
T 1372
T 1373
T 1374
T 1375
T 1376
T 1377
T 1378
T 1379
T 1380
T 1381
T 1382
T 1383
T 1384
T 1385
T 1386
T 1387
T 1388
T 1389
T 1390
T 1391
T 1392
T 1393
T 1394
T 1395
T 1396
T 1397
T 1398
T 1399
T 1400
T 1401
T 1402
T 1403
T 1404
T 1405
T 1406
T 1407
T 1408
T 1409
T 1410
T 1411
T 1412
T 1413
T 1414
T 1415
T 1416
T 1417
T 1418
T 1419
T 1420
T 1421
T 1422
T 1423
T 1424
T 1425
T 1426
T 1427
T 1428
T 1429
T 1430
T 1431
T 1432
T 1433
T 1434
T 1435
T 1436
T 1437
T 1438
T 1439
T 1440
T 1441
T 1442
T 1443
T 1444
T 1445
T 1446
T 1447
T 1448
T 1449
T 1450
T 1451
T 1452
T 1453
T 1454
T 1455
T 1456
T 1457
T 1458
T 1459
T 1460
T 1461
T 1462
T 1463
T 1464
T 1465
T 1466
T 1467
T 1468
T 1469
T 1470
T 1471
T 1472
T 1473
T 1474
T 1475
T 1476
T 1477
T 1478
T 1479
T 1480
T 1481
T 1482
T 1483
T 1484
T 1485
T 1486
T 1487
T 1488
T 1489
T 1490
T 1491
T 1492
T 1493
T 1494
T 1495
T 1496
T 1497
T 1498
T 1499
T 1500
T 1501
T 1502
T 1503
T 1504
T 1505
T 1506
T 1507
T 1508
T 1509
T 1510
T 1511
T 1512
T 1513
T 1514
T 1515
T 1516
T 1517
T 1518
T 1519
T 1520
T 1521
T 1522
T 1523
T 1524
T 1525
T 1526
T 1527
T 1528
T 1529
T 1530
T 1531
T 1532
T 1533
T 1534
T 1535
T 1536
T 1537
T 1538
T 1539
T 1540
T 1541
T 1542
T 1543
T 1544
T 1545
T 1546
T 1547
T 1548
T 1549
T 1550
T 1551
T 1552
T 1553
T 1554
T 1555
T 1556
T 1557
T 1558
T 1559
T 1560
T 1561
T 1562
T 1563
T 1564
T 1565
T 1566
T 1567
T 1568
T 1569
T 1570
T 1571
T 1572
T 1573
T 1574
T 1575
T 1576
T 1577
T 1578
T 1579
T 1580
T 1581
T 1582
T 1583
T 1584
T 1585
T 1586
T 1587
T 1588
T 1589
T 1590
T 1591
T 1592
T 1593
T 1594
T 1595
T 1596
T 1597
T 1598
T 1599
T 1600
T 1601
T 1602
T 1603
T 1604
T 1605
T 1606
T 1607
T 1608
T 1609
T 1610
T 1611
T 1612
T 1613
T 1614
T 1615
T 1616
T 1617
T 1618
T 1619
T 1620
T 1621
T 1622
T 1623
T 1624
T 1625
T 1626
T 1627
T 1628
T 1629
T 1630
T 1631
T 1632
T 1633
T 1634
T 1635
T 1636
T 1637
T 1638
T 1639
T 1640
T 1641
T 1642
T 1643
T 1644
T 1645
T 1646
T 1647
T 1648
T 1649
T 1650
T 1651
T 1652
T 1653
T 1654
T 1655
T 1656
T 1657
T 1658
T 1659
T 1660
T 1661
T 1662
T 1663
T 1664
T 1665
T 1666
T 1667
T 1668
T 1669
T 1670
T 1671
T 1672
T 1673
T 1674
T 1675
T 1676
T 1677
T 1678
T 1679
T 1680
T 1681
T 1682
T 1683
T 1684
T 1685
T 1686
T 1687
T 1688
T 1689
T 1690
T 1691
T 1692
T 1693
T 1694
T 1695
T 1696
T 1697
T 1698
T 1699
T 1700
T 1701
T 1702
T 1703
T 1704
T 1705
T 1706
T 1707
T 1708
T 1709
T 1710
T 1711
T 1712
T 1713
T 1714
T 1715
T 1716
T 1717
T 1718
T 1719
T 1720
T 1721
T 1722
T 1723
T 1724
T 1725
T 1726
T 1727
T 1728
T 1729
T 1730
T 1731
T 1732
T 1733
T 1734
T 1735
T 1736
T 1737
T 1738
T 1739
T 1740
T 1741
T 1742
T 1743
T 1744
T 1745
T 1746
T 1747
T 1748
T 1749
T 1750
T 1751
T 1752
T 1753
T 1754
T 1755
T 1756
T 1757
T 1758
T 1759
T 1760
T 1761
T 1762
T 1763
T 1764
T 1765
T 1766
T 1767
T 1768
T 1769
T 1770
T 1771
T 1772
T 1773
T 1774
T 1775
T 1776
T 1777
T 1778
T 1779
T 1780
T 1781
T 1782
T 1783
T 1784
T 1785
T 1786
T 1787
T 1788
T 1789
T 1790
T 1791
T 1792
T 1793
T 1794
T 1795
T 1796
T 1797
T 1798
T 1799
T 1800
T 1801
T 1802
T 1803
T 1804
T 1805
T 1806
T 1807
T 1808
T 1809
T 1810
T 1811
T 1812
T 1813
T 1814
T 1815
T 1816
T 1817
T 1818
T 1819
T 1820
T 1821
T 1822
T 1823
T 1824
T 1825
T 1826
T 1827
T 1828
T 1829
T 1830
T 1831
T 1832
T 1833
T 1834
T 1835
T 1836
T 1837
T 1838
T 1839
T 1840
T 1841
T 1842
T 1843
T 1844
T 1845
T 1846
T 1847
T 1848
T 1849
T 1850
T 1851
T 1852
T 1853
T 1854
T 1855
T 1856
T 1857
T 1858
T 1859
T 1860
T 1861
T 1862
T 1863
T 1864
T 1865
T 1866
T 1867
T 1868
T 1869
T 1870
T 1871
T 1872
T 1873
T 1874
T 1875
T 1876
T 1877
T 1878
T 1879
T 1880
T 1881
T 1882
T 1883
T 1884
T 1885
T

NORTH

PROPOSED OVERHEAD ELECTRIC WIRE (APPROXIMATELY 65 LF)

PROPOSED OVERHEAD ELECTRIC WIRE (APPROXIMATELY 110 LF)

SITE LIGHT BASE POLE
TOP OF CONCRETE BASE=1349.04
PROPOSED GRADE ELEVATION=1346.54
817 / C802

PROPOSED UTILITY POLE (TYP. 1 OF 3)

PROPOSED WATER WELL

CONTRACTOR TO AVOID POTENTIAL CONFLICT WITH PROPOSED STORM SEWER FACILITIES

4" SCH. 40 PVC SANITARY SEWER PIPE @ 1.0% MIN. TO SEPTIC TANK

COORDINATE UTILITY SERVICE ENTRIES WITH ARCHITECT AND MEP PLANS. INSTALL METERS/PANELS PER UTILITY COMPANY STANDARDS (WHERE APPLICABLE)

PROPOSED DOLLAR GENERAL

PROTOTYPE C
GROSS AREA = 9,100 S.F.
SALES AREA = 7,161 S.F.
BUILDING HEIGHT = 18'-0"
F.F.E. = 1347.50

PROPOSED DRIP MICROMOUND SANITARY DISPOSAL AREA (SEE NOTE 5) SHALL BE PROTECTED BY TEMPORARY CONSTRUCTION FENCING. NO HEAVY MACHINERY PERMITTED WITHIN THIS AREA

DOUBLE VENT WITH CLEANOUT 824 / C804

PROPOSED 1.0" DIAMETER SCH. 40 SUPPLY AND RETURN LINES. REFER TO NOTE 5

PROPOSED SEPTIC AND DRIP DOSE TANKS. REFER TO NOTE 5

CONTRACTOR TO PROVIDE UNDERGROUND ELECTRICAL CONDUIT TO SANITARY SEWER PUMP AS REQUIRED (SEE NOTE 5)

PROPOSED SITE LIGHTING POLE (TYP. 1 OF 2) REFER TO ARCHITECTURAL PLANS

4" PVC UNDERGROUND IRRIGATION CONDUIT REFER TO IRRIGATION PLANS (BY OTHERS)

PROPOSED UTILITY POLE. CONTRACTOR TO COORDINATE WITH UTILITY PROVIDER FOR EXACT LOCATION AND SERVICE CONNECTION

817 / C802 SITE LIGHT BASE POLE
TOP OF CONCRETE BASE=1340.53
PROPOSED GRADE ELEVATION=1338.03

CONTRACTOR SHALL COORDINATE SERVICE CONNECTION TO EXISTING GAS LINE WITH UTILITY PROVIDER

CONTRACTOR TO AVOID CONFLICT WITH PROPOSED STORM SEWER

PROPOSED GAS SERVICE LINE (APPROXIMATELY 285 LF)

PROPOSED PERMANENT ACCESS EASEMENT FOR SEPTIC SYSTEM MAINTENANCE

PROPOSED PERMANENT ACCESS EASEMENT FOR SEPTIC SYSTEM MAINTENANCE

PERRY HIGHWAY
ROUTE 19

LEGEND

- EXISTING SUBJECT PROPERTY LINE
- EXISTING ADJACENT PROPERTY LINE
- EXISTING RIGHT-OF-WAY
- EXISTING SETBACK LINE
- EXISTING PROPERTY EASEMENT
- EXISTING INDEX CONTOUR
- EXISTING INTERMEDIATE CONTOUR
- EXISTING UNPAVED DRIVEWAY
- EXISTING PAVED ROAD
- EXISTING TREELINE
- EXISTING BUILDING
- OH-E EXISTING OVERHEAD ELECTRICAL LINE
- G EXISTING GAS LINE
- ST EXISTING STORM SEWER LINE
- EXISTING UTILITY POLE
- EXISTING STORM INLET
- 1335 PROPOSED INDEX CONTOUR
- 1334 PROPOSED INTERMEDIATE CONTOUR
- PROPOSED BUILDING
- PROPOSED CONCRETE SIDEWALK
- PROPOSED HEAVY DUTY CONCRETE
- PROPOSED EDGE OF PAVEMENT
- PROPOSED ASPHALT WEDGE CURB
- PROPOSED CHAIN LINK FENCE
- PROPOSED TIMBER GUIDERAIL
- PROPOSED PYLON SIGN
- PROPOSED DIRECTIONAL TRAFFIC ARROW
- PROPOSED SIGN
- ST PROPOSED FOUNDATION DRAIN
- PROPOSED STORM SEWER PIPE
- UD PROPOSED UNDERDRAIN
- PROPOSED ENDWALL (W/ RIPRAP APRON)
- PROPOSED INLET/CATCH BASIN
- UG-E PROPOSED UNDERGROUND ELECTRIC CONDUIT
- PROPOSED UTILITY POLE
- W PROPOSED WATER LINE
- PROPOSED WATER WELL
- SAN PROPOSED SANITARY SEWER
- G PROPOSED GAS LINE
- OH-W PROPOSED OVERHEAD WIRE
- PROPOSED SITE LIGHTING POLE

NOTES:

1. REFER TO DRAWING C001 FOR UTILITY GENERAL NOTES.
2. CONTRACTOR SHALL COORDINATE WITH THE ELECTRIC AND TELEPHONE UTILITY COMPANIES WHEN PLACING PROPOSED OR REPLACING EXISTING UTILITY POLES AND ASSOCIATED UTILITY LINES.
3. CONTRACTOR SHALL VERIFY UTILITY SERVICE ENTRY LOCATIONS WITH ARCHITECT AND MEP PLANS.
4. FOR PROPOSED LIGHTING IMPROVEMENTS, PLEASE REFER TO THE SITE LIGHTING PLAN, SHEET PH1.1, PREPARED BY HART ARCHITECTURAL SERVICES, LLC.
5. CONTRACTOR SHALL FOLLOW THE DESIGN AND GUIDELINES OF THE ONLOT SANITARY SEWER SYSTEM INCLUDING ALL MATERIALS, LOCATIONS, AND ELEVATIONS. PLEASE REFER TO SUPPLEMENTAL PLANS PREPARED BY ANDRASKO & ASSOCIATES, INC., DATED 02/24/17.

REFERENCE

1. VERTICAL DATUM IS BASED UPON NAVD88, AS DETERMINED BY CIVIL & ENVIRONMENTAL CONSULTANTS, INC. USING SURVEY GRADE GPS MEASUREMENTS AND OPUS POST-PROCESSING.
2. FIELD SURVEY BY CIVIL & ENVIRONMENTAL CONSULTANTS, INC. DATED 09/27/2016.

SCALE IN FEET
0 20 40

ONE CALL SERIAL NO.: 20162702202

CALL BEFORE YOU DIG!
PENNSYLVANIA LAW REQUIRES 3 WORKING DAYS NOTICE FOR CONSTRUCTION PHASE AND 10 WORKING DAYS IN DESIGN STAGE-STOP CALL PENNSYLVANIA ONE CALL SYSTEM, INC.
1-800-242-1776

PENNSYLVANIA ACT 38 (1991) REQUIRES NO LESS THAN 3 WORKING DAYS NOTICE NOR MORE THAN 10 WORKING DAYS NOTICE FROM EXCAVATORS WHO ARE ABOUT TO: DIG, DRILL, BLAST, AUGER, BORE, GRADE, TRENCH, OR DEMOLISH WHEN IN THE CONSTRUCTION PHASE. FOR LOCATION REQUESTS IN THE STATE OF PENNSYLVANIA, CALL TOLL FREE 1-800-242-1776. UNDERGROUND UTILITIES HAVE BEEN PLOTTED FROM AVAILABLE INFORMATION AND THE LOCATION MUST BE CONSIDERED APPROXIMATE. OTHER UNDERGROUND UTILITIES MAY EXIST WHICH ARE NOT SHOWN. IT WILL BE THE CONTRACTOR'S RESPONSIBILITY TO ASCERTAIN ALL PHYSICAL LOCATIONS OF UTILITY LINES PRIOR TO THE TIME OF CONSTRUCTION. IN NO WAY SHALL THE CONTRACTOR HOLD THE SURVEYOR RESPONSIBLE FOR ANY UTILITY LOCATION SHOWN ON THIS PLAN.

PLAN BOOK	PAGE
365	22

*HAND SIGNATURE ON FILE

COMMONWEALTH OF PENNSYLVANIA
REGISTERED PROFESSIONAL
CHRISTOPHER J. REMLEY
ENGINEER
No. 079900

SUBMITTAL & REVISION RECORD

NO	DATE	DESCRIPTION
0	09/27/17	LAND DEVELOPMENT SUBMISSION TO MUDDY CREEK TOWNSHIP
1	02/13/2017	NPDES SUBMISSION #1 TO BUTLER COUNTY CONSERVATION DISTRICT
2	03/06/2017	RESPONSE TO COMMENTS FROM ENGINEER DATED 03/03/17
3	03/28/2017	LIGHT PRELIMINARY CIVIL SET SUBMISSION
4	03/30/2017	RESPONSE TO COMMENTS SUBMISSION TO BCCD DATED 3/14/2017
5	04/05/2017	FINAL LAND DEVELOPMENT PLAN SET SUBMISSION TO MUDDY CREEK TOWNSHIP
6	04/25/2017	RESPONSE TO COMMENTS FROM PTV DATED 04/01/2017 & FINAL SUBMISSION TO BCCD FOR NPDES PERMIT
7	07/13/2017	FINAL LAND DEVELOPMENT PLAN SET SUBMISSION TO MUDDY CREEK TOWNSHIP
8		

Civil & Environmental Consultants, Inc.
333 Baldwin Road · Pittsburgh, PA 15205
412-429-2324 · 800-365-2324
www.cecinc.com

PTV XX, LLC
PORTERSVILLE DOLLAR GENERAL STORE
MUDDY CREEK TOWNSHIP
BUTLER COUNTY, PENNSYLVANIA

SITE UTILITY PLAN

DATE: FEBRUARY 15, 2017 | DRAWN BY: EJB/DMO
DWG SCALE: 1"=20' | CHECKED BY: *CJR
PROJECT NO: 163-326
APPROVED BY: *GPQ

DRAWING NO.: **C500**
SHEET 10 OF 21

P:\2016\163-326\[...C500\Dwg\C500.dwg(C500) LD(7/18/2017 - etvice) - LD 7/18/2017 10:23 AM

NORTH

TREES	CODE	QTY	BOTANICAL NAME / COMMON NAME	CONT	CAL	SIZE	REMARKS
	PC	11	Picea pungens / Colorado Spruce	B&B		7' – 8' HT.	
	ZG	10	Zelkova serrata 'Green Vase' / Sawleaf Zelkova	B&B	3" CAL		

GROUND COVERS	CODE	QTY	BOTANICAL NAME / COMMON NAME	CONT	REMARKS
	RB	1,132 sf	Native Detention Area Mix / ERNMX-183	seed	www.ernstseed.com; add nurse crop as specified on E&S plan for steep slope mix.
	SOD	14,834 sf	SOD	SOD	
	SM	22,574 sf	STEEP SLOPE SEED MIXTURE	seed	SEE E&S PLAN
	TURF	28,372 sf	TURF GRASS	seed	

PROPOSED TREE LINE

EXISTING TREES TO REMAIN

(349 sf)SOD

TURF(28,372 sf)

ZG(8)

PC(9)

SM(4,476 sf)

PC(2)

ZG(2)

SOD(2,587 sf)

(11,898 sf)SOD

(18,098 sf)SM

(1,132 sf)RB

PROPOSED DOLLAR GENERAL

PROTOTYPE C
GROSS AREA = 9,100 S.F.
SALES AREA = 7,161 S.F.
BUILDING HEIGHT = 18'-0"
F.F.E. = 1347.50

DO NOT DISTURB AREA
HEAVY MACHINERY NOT
PERMITTED

PERRY HIGHWAY
ROUTE 19

SUNSET RIDGE

BUILDING

ASPHALT PAVING

EDGE OF ASPHALT

APPROXIMATE LOCATION OF PROPERTY AND 30' RIGHT OF WAY PER D.B.V. 1027, PG. 9123

LANDSCAPE REQUIREMENTS

SECTION 613. DESIGN STANDARDS – LANDSCAPING

– REQUIRED: PROPERTY LINE LENGTH / 15' = TOTAL NUMBER OF TREES
480' / 15' = 32 TREES

– PROVIDED: 21 TREES + EXISTING TREES TO REMAIN AND FULFILL REQUIREMENTS

REFERENCE

1. VERTICAL DATUM IS BASED UPON NAVD88, AS DETERMINED BY CIVIL & ENVIRONMENTAL CONSULTANTS, INC., USING SURVEY GRADE GPS MEASUREMENTS AND OPUS POST-PROCESSING.
2. FIELD SURVEY BY CIVIL & ENVIRONMENTAL CONSULTANTS, INC. DATED 09/27/2016.

SCALE IN FEET
0 30 60

SUBMITTAL & REVISION RECORD

NO	DATE	DESCRIPTION
1	02/15/2017	LAND DEVELOPMENT SUBMISSION TO MUDDY CREEK TOWNSHIP
2	02/21/2017	NPDES SUBMISSION TO BUTLER COUNTY CONSERVATION DISTRICT
3	03/06/2017	RESPONSE TO COMMENTS FROM ENGINEER DATED 03/03/2017
4	03/28/2017	HART PRELIMINARY CIVIL SET SUBMISSION
5	03/30/2017	RESPONSE TO COMMENTS SUBMISSION TO BCCD DATED 3/14/2017
6	04/28/2017	FINAL LAND DEVELOPMENT PLAN SET SUBMISSION TO MUDDY CREEK TOWNSHIP
7	05/12/2017	RESPONSE TO COMMENTS FROM FYI DATED 05/01/2017 & FINAL SUBMISSION TO BCCD FOR NPDES PERMIT
8	07/13/2017	FINAL LAND DEVELOPMENT PLAN SET SUBMISSION TO MUDDY CREEK TOWNSHIP

Civil & Environmental Consultants, Inc.
333 Baldwin Road · Pittsburgh, PA 15205
412-429-2324 · 800-365-2324
www.cecinc.com

PTV XX, LLC
PORTERSVILLE DOLLAR GENERAL STORE
MUDDY CREEK TOWNSHIP
BUTLER COUNTY, PENNSYLVANIA

PLAN BOOK	PAGE
365	23

ONE CALL SERIAL NO.: 20162702202

CALL BEFORE YOU DIG!
PENNSYLVANIA LAW REQUIRES 3 WORKING DAYS NOTICE FOR CONSTRUCTION PHASE AND 10 WORKING DAYS IN DESIGN STAGE–STOP CALL PENNSYLVANIA ONE CALL SYSTEM, INC.
1–800–242–1776

PENNSYLVANIA ACT 38 (1991) REQUIRES NO LESS THAN 3 WORKING DAYS NOTICE NOR MORE THAN 10 WORKING DAYS NOTICE FROM EXCAVATORS WHO ARE ABOUT TO: DIG, DRILL, BLAST, AUGER, BORE, GRADE, TRENCH, OR DEMOLISH WHEN IN THE CONSTRUCTION PHASE. FOR LOCATION REQUESTS IN THE STATE OF PENNSYLVANIA, CALL TOLL FREE 1–800–242–1776. UNDERGROUND UTILITIES HAVE BEEN PLOTTED FROM AVAILABLE INFORMATION AND THE LOCATION MUST BE CONSIDERED APPROXIMATE. OTHER UNDERGROUND UTILITIES MAY EXIST WHICH ARE NOT SHOWN. IT WILL BE THE CONTRACTOR'S RESPONSIBILITY TO ASCERTAIN ALL PHYSICAL LOCATIONS OF UTILITY LINES PRIOR TO THE TIME OF CONSTRUCTION. IN NO WAY SHALL THE CONTRACTOR HOLD THE SURVEYOR RESPONSIBLE FOR ANY UTILITY LOCATION SHOWN ON THIS PLAN.

*HAND SIGNATURE ON FILE

COMMONWEALTH OF PENNSYLVANIA
STANLEY J. HARTMAN
REGISTERED LANDSCAPE ARCHITECT
LA002175

LANDSCAPE PLAN

DATE: FEBRUARY 15, 2017 | DRAWN BY: EJB/DMO
DWG SCALE: 1"=30' | CHECKED BY: *CJR
PROJECT NO: 163-826
APPROVED BY: *GPQ

DRAWING NO.: C700
SHEET 11 OF 21

P:\2016\163-826\...\C700.dwg(C700) LS(3/9/2017 - ebonnell) - LP: 3/17/2017 4:06 PM

PLANTING NOTES

1. THE QUANTITIES INDICATED ON THE PLANT MATERIALS SCHEDULE ARE PROVIDED FOR THE BENEFIT OF THE LANDSCAPE CONTRACTOR BUT SHOULD NOT BE ASSUMED TO BE CORRECT. THE LANDSCAPE CONTRACTOR SHALL BE RESPONSIBLE FOR VERIFYING THE QUANTITIES INDICATED. ANY DISCREPANCIES NOTED SHALL BE BROUGHT TO THE ATTENTION OF THE OWNERS REPRESENTATIVE PRIOR TO INSTALLATION. IN THE EVENT OF A DISCREPANCY, THE DRAWINGS SHALL GOVERN.
2. NO SUBSTITUTIONS AS TO SIZE, TYPE, SPACING, QUANTITY OR QUALITY OF PLANT MATERIAL SHALL BE MADE WITHOUT THE WRITTEN APPROVAL OF THE LANDSCAPE ARCHITECT. CHANGES IN PLANT MATERIAL MAY REQUIRE RE-APPROVAL BY LOCAL AUTHORITIES. CONTRACTOR IS NOT TO SEEK RE-APPROVAL WITHOUT EXPRESS WRITTEN CONSENT OF THE LANDSCAPE ARCHITECT.
3. ALL PLANTS MUST BE NURSERY GROWN, HEALTHY, VIGOROUS, AND FREE FROM ALL PESTS AND DISEASE, BALL AND BURLAP (B&B) OR CONTAINER GROWN AS SPECIFIED IN THE MATERIALS SCHEDULE. ALL PLANT SHALL CONFORM TO THE AMERICAN STANDARD FOR NURSERY STOCK ANSI Z-60, LATEST EDITION FOR SIZE AND QUALITY.
4. ALL TREES MUST BE STRAIGHT TRUNKED, FULL HEADED, AND MEET THE MINIMUM REQUIREMENTS. TREES WITH A "Y" SHAPE ARE NOT ACCEPTABLE. REFER TO THE WRITTEN SPECIFICATIONS.
5. ALL PLANTS ARE SUBJECT TO REVIEW AND APPROVAL BY THE LANDSCAPE ARCHITECT AND OR OWNERS REPRESENTATIVE AT ANY TIME PRIOR TO FINAL ACCEPTANCE.
6. ALL TREES 2-INCH CALIPER AND LARGER SHALL BE STAKED AND GUYED AS SPECIFIED. STAKE AND GUYED MATERIALS SHALL BE REMOVED BY THE LANDSCAPE CONTRACTOR 12 MONTHS AFTER FINAL ACCEPTANCE.
7. THE DIMENSIONS FOR HEIGHT, SPREAD, AND CALIPER AS SPECIFIED IN THE PLANT MATERIALS SCHEDULE ARE THE MINIMUM DESIRED FOR EACH PLANT. EACH PLANT SHALL BE UNIFORM AND CONSISTENT AS IT PERTAINS TO THE SPECIFICATIONS AND THE INDIVIDUAL SPECIES. ANY PLANT MATERIAL WHICH FAILS THESES SPECIFICATIONS WILL BE REJECTED. THE CONTRACTOR SHALL PROVIDE ACCEPTABLE MATERIAL AT NO ADDITIONAL COST TO THE OWNER. CALIPER SIZE IS NOT TO BE REDUCED. TREES THAT FAIL MINIMUM CALIPER SIZE AS MEASURED IN THE FIELD WILL BE REJECTED AND REPLACEMENTS SHALL BE MADE BY THE CONTRACTOR AT NO ADDITIONAL COST. CALIPER MEASUREMENTS SHALL BE MADE IN ACCORDANCE WITH ANSI STANDARDS.
8. PRIOR TO COMMENCEMENT OF INSTALLATION, THE LANDSCAPE CONTRACTOR SHALL BE RESPONSIBLE FOR LOCATING ALL EXISTING UTILITIES AND SHALL AVOID DAMAGING UTILITIES DURING INSTALLATION. ANY UTILITIES DAMAGED DURING INSTALLATION SHALL BE REPAIRED BY THE LANDSCAPE CONTRACTOR TO THE SATISFACTION OF THE APPROPRIATE UTILITY COMPANY. ALL REPAIRS SHALL BE AT NO COST TO THE OWNER. NO TREES SHALL BE PLANTED WITHIN 10' OF SITE UTILITY LINES. FIELD ADJUST AS NECESSARY AFTER LANDSCAPE ARCHITECT'S APPROVAL.
9. THE LANDSCAPE CONTRACTOR SHALL FIELD STAKE ALL PLANT LOCATIONS PRIOR TO INSTALLATION. THE LANDSCAPE ARCHITECT SHALL APPROVE ALL STAKED LOCATIONS PRIOR TO INSTALLATION. PLANTS INSTALLED PRIOR TO APPROVAL BY THE LANDSCAPE ARCHITECT ARE SUBJECT TO REJECTION AND/ OR REPLACEMENT AT NO ADDITIONAL COST TO THE OWNER.
10. PRE-EMERGENT HERBICIDES, TREFLAN OR EPTAM, SHALL BE APPLIED TO ALL PLANTING BEDS. APPLY AT MANUFACTURERS RECOMMENDATIONS. HERBICIDES SHALL BE INCORPORATED INTO THE SOIL MIXES.
11. APPLY ROOT STIMULATOR, CONTAINING MICRORHIZZA, TO ALL PLANTS PRIOR TO BACK FILLING. APPLY AT MANUFACTURER'S RECOMMENDATIONS. CONTRACTOR TO SUBMIT SAMPLES OF ROOT STIMULATOR TO THE LANDSCAPE ARCHITECT FOR APPROVAL PRIOR TO USE.
12. SEEDING: EVENLY APPLY THE TEMPORARY/PERMANENT SEED MIXTURES USING HYDROSEEDING, BROADCAST, OR DRILL SEEDING METHODS THAT PLANT SEED LESS THAN ¼-INCH BELOW THE GROUND SURFACE: APPLY LEGUME SEED INOCULANTS SPECIFICALLY MADE FOR THE LEGUME SEED TYPE BEING APPLIED AT FIVE TIMES THE MANUFACTURER'S RECOMMENDED RATE. USE NO SEED OR INOCULANT THAT HAS BEEN IMPROPERLY STORED, EXPIRED, OR SEED OLDER THAN 9 MONTHS FROM THE SEED TEST DATE. IF HYDROSEEDING METHODS ARE USED SEED, INOCULANTS, FERTILIZERS, AND POLYMER TACKIFIER/SOIL STABILIZER (BELOW) MAY BE APPLIED IN ONE APPLICATION, PROVIDED THAT SEED AND INOCULANTS ARE NOT HELD IN A SLURRY WITH FERTILIZERS FOR MORE THAN ONE HOUR.
13. ALL DISTURBED AREAS THAT DO NOT RECEIVE MULCH OR OTHER SPECIFIED IMPROVEMENTS ARE TO BE FINE GRADED TO TRANSITION SMOOTHLY INTO ADJACENT GRADES AND RECEIVE THE FOLLOWING PERMANENT SEED MIX IF NO OTHER PERMANENT SEED MIX IS PROVIDED. PERMANENT SEED MIX SHALL MATCH THE EXISTING LAWN TYPE AND CONSIST OF A MINIMUM 4 NAMED VARIETIES OF EACH SEED TYPE. SUBMIT THE SEED MIX TO THE LANDSCAPE ARCHITECT FOR APPROVAL PRIOR TO SEEDING.
14. THE LANDSCAPE CONTRACTOR SHALL COMPLETELY GUARANTEE ALL PLANTINGS FOR A PERIOD OF ONE (1) YEAR BEGINNING UPON THE WRITTEN DATE OF SUBSTANTIAL COMPLETION OF THE PROJECT. ANY PLANTS SUBJECT TO REPLACEMENT SHALL BE MADE AT THE END OF THE WARRANTY PERIOD OR AT TIME AS DETERMINED BY THE OWNERS REPRESENTATIVE. ALL PLANTS MUST BE ALIVE AND HEALTHY FOR REVIEW AND APPROVAL BY LOCAL AUTHORITIES AS APPROPRIATE FOR OCCUPANCY PERMIT.
15. THE LANDSCAPE CONTRACTOR SHALL UTILIZE ON-SITE TOPSOIL AS AVAILABLE FROM THE CONTRACTOR. ALL IMPORTED TOPSOIL SHALL BE APPROVED BY THE OWNERS REPRESENTATIVE PRIOR TO PLACEMENT.
16. EXISTING GRASS TO BE REMOVED, IF PRESENT, AND TOPSOIL TO BE SPREAD SMOOTH AND HAND-RAKED TO REMOVE ALL ROCKS AND DEBRIS LARGER THAT 1 INCH IN DIAMETER PRIOR TO LAYING SOD OR SEEDING.
17. ALL TREE, SHRUB AND GROUND COVER BEDS (EXISTING AND NEW) TO BE MULCHED WITH A MINIMUM OF 3 INCHES OF AGED, SHREDDED HARDWOOD BARK, SUBMIT SAMPLE TO LANDSCAPE ARCHITECT FOR APPROVAL. ALL PLANTING AREAS MUST BE COMPLETELY MULCHED.
18. THE TYPICAL PLANTING SOIL BACKFILL MIX FOR BEDS AND PLANT BACKFILL SHALL CONSIST OF THE FOLLOWING:
    2/3 SITE SOIL
    1/3 SOIL AMENDMENTS (BY VOLUME AS FOLLOWS)
        2 PARTS HUMUS AND OR PEAT
        1 PART COARSE RIVER SAND
        1 PART STERILIZED COMPOSTED COW MANURE
    COMMERCIAL FERTILIZER AND LIME AS RECOMMENDED BY THE SOILS TEST REPORT.
    COMPLETELY BLEND BACKFILL SOIL MIX PRIOR TO PLACEMENT.

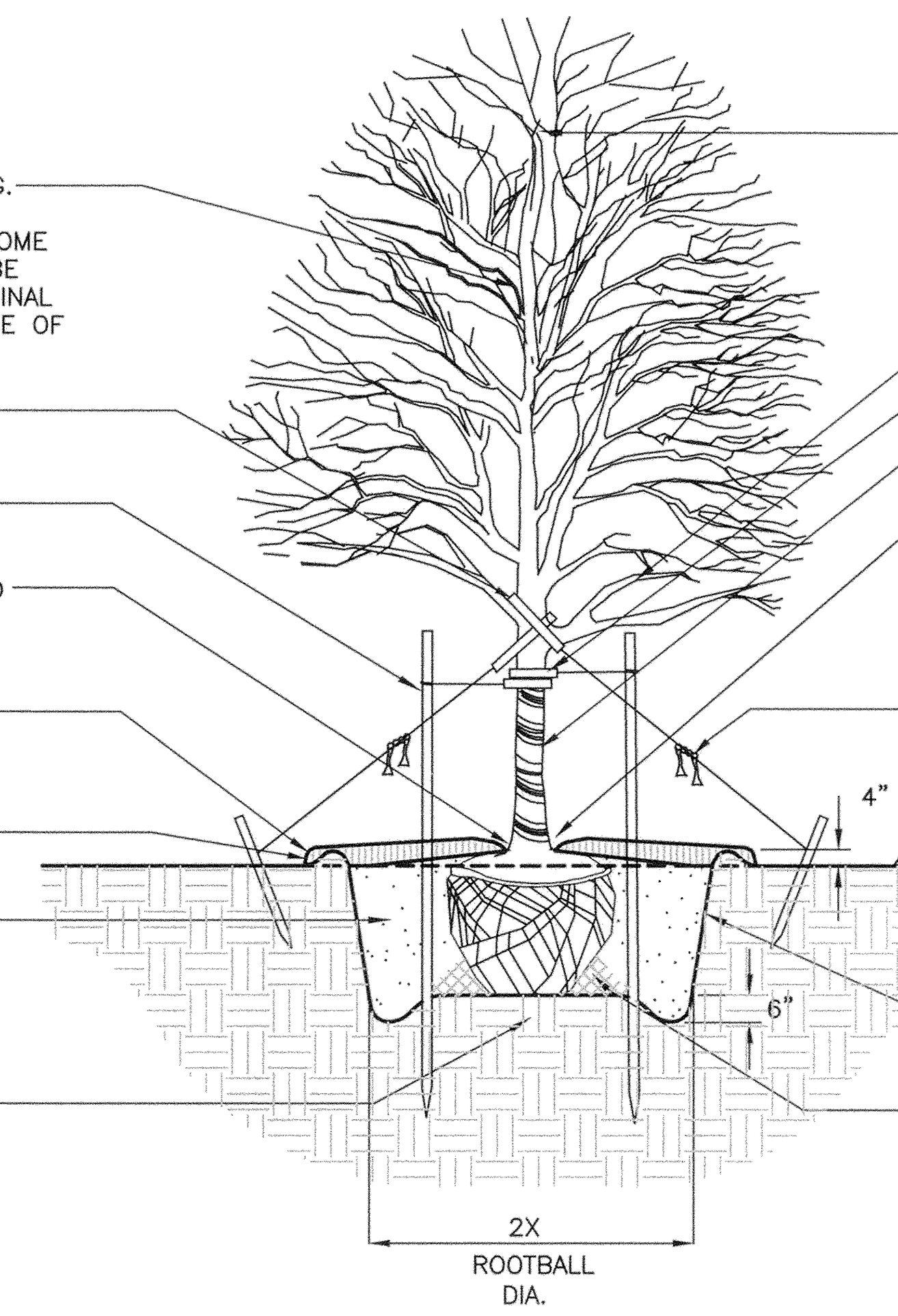

NOTES:
1. PROVIDE POSITIVE DRAINAGE UNDER ALL CIRCUMSTANCES. DRAINAGE SHOULD BE FROM CENTER OF ROOT BALL TO PERIMETER OF ROOT BALL. DO NOT ALLOW PONDING OF WATER UNDER ROOTBALL.
2. REMOVE TOP HALF OF WIRE BASKET AFTER PLACING ROOTBALL IN PLANT PIT.
3. REMOVE ROPE TIES & TOP 1/3 OF BURLAP FROM ROOT BALL AFTER PLANTING.
4. POLYPROPYLENE STRAPS MAY BE SUBSTITUTED IN LIEU OF WIRES, ARBORTIE OR EQUIVALENT.
5. SEE PLANTING SCHEDULE AND PLANTING NOTES FOR ADDITIONAL INFORMATION/REQUIREMENTS.

DECIDUOUS TREE PLANTING DETAIL

N.T.S.

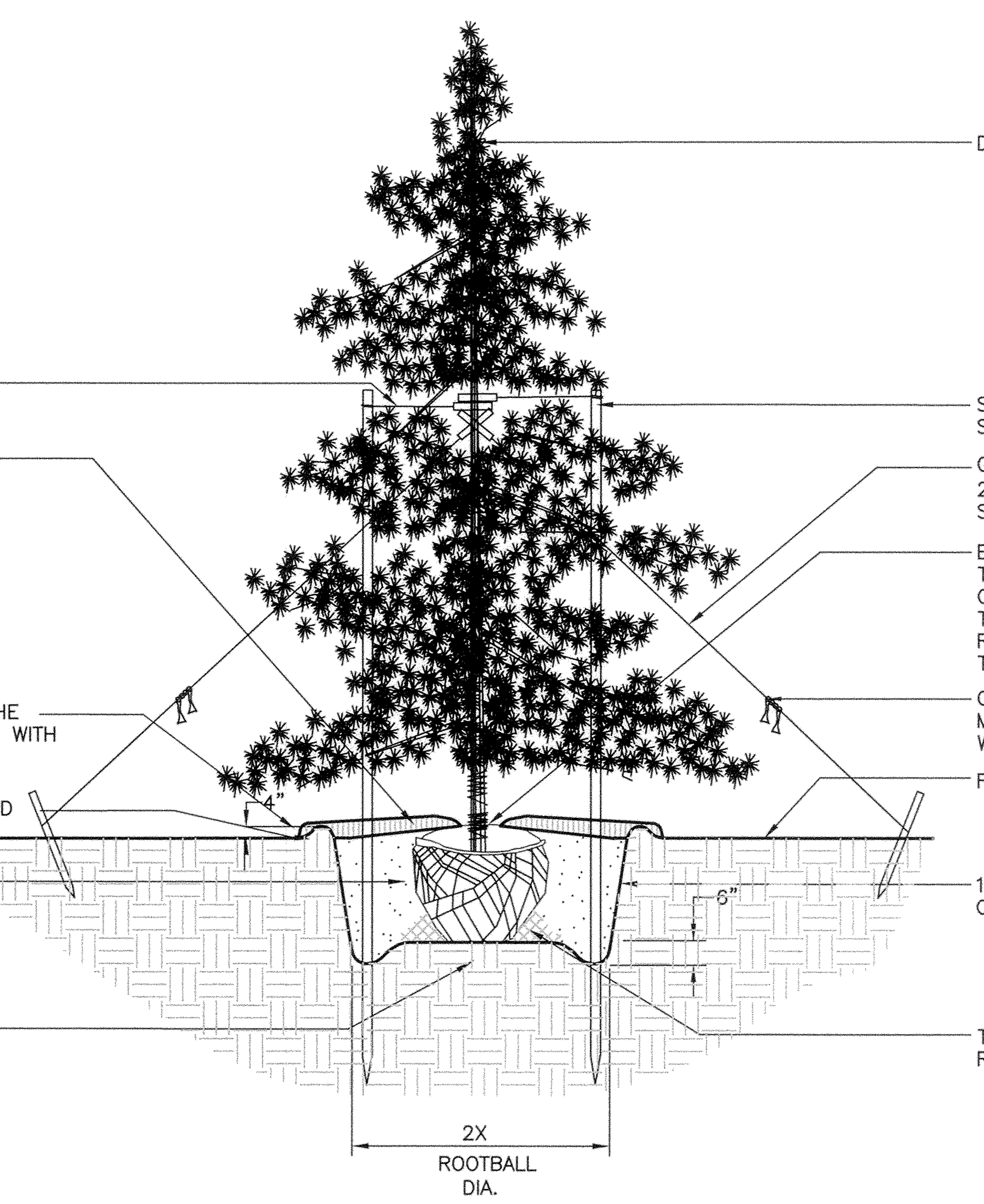

NOTES
1. PROVIDE POSITIVE DRAINAGE UNDER ALL CIRCUMSTANCES. DRAINAGE SHOULD BE FROM CENTER OF ROOT BALL TO PERIMETER OF ROOT BALL. DO NOT ALLOW PONDING OF WATER UNDER ROOTBALL.
2. REMOVE TOP HALF OF WIRE BASKET AFTER PLACING ROOTBALL IN PLANT PIT.
3. REMOVE ROPE TIES & TOP 1/3 OF BURLAP FROM ROOT BALL AFTER PLANTING.
4. POLYPROPYLENE STRAPS MAY BE SUBSTITUTED IN LIEU OF WIRES, ARBORTIE OR EQUIVALENT.
5. SEE PLANTING SCHEDULE AND PLANTING NOTES FOR ADDITIONAL INFORMATION/REQUIREMENTS.
6. WHEN PRUNING EVERGREENS, REMOVE ONLY DEAD OR DAMAGED BRANCHES. ALL COLLECTED SPECIMENS SHALL BE SPRAYED W/INSECTICIDES AFTER PLANTING.

EVERGREEN TREE PLANTING DETAIL

N.T.S.

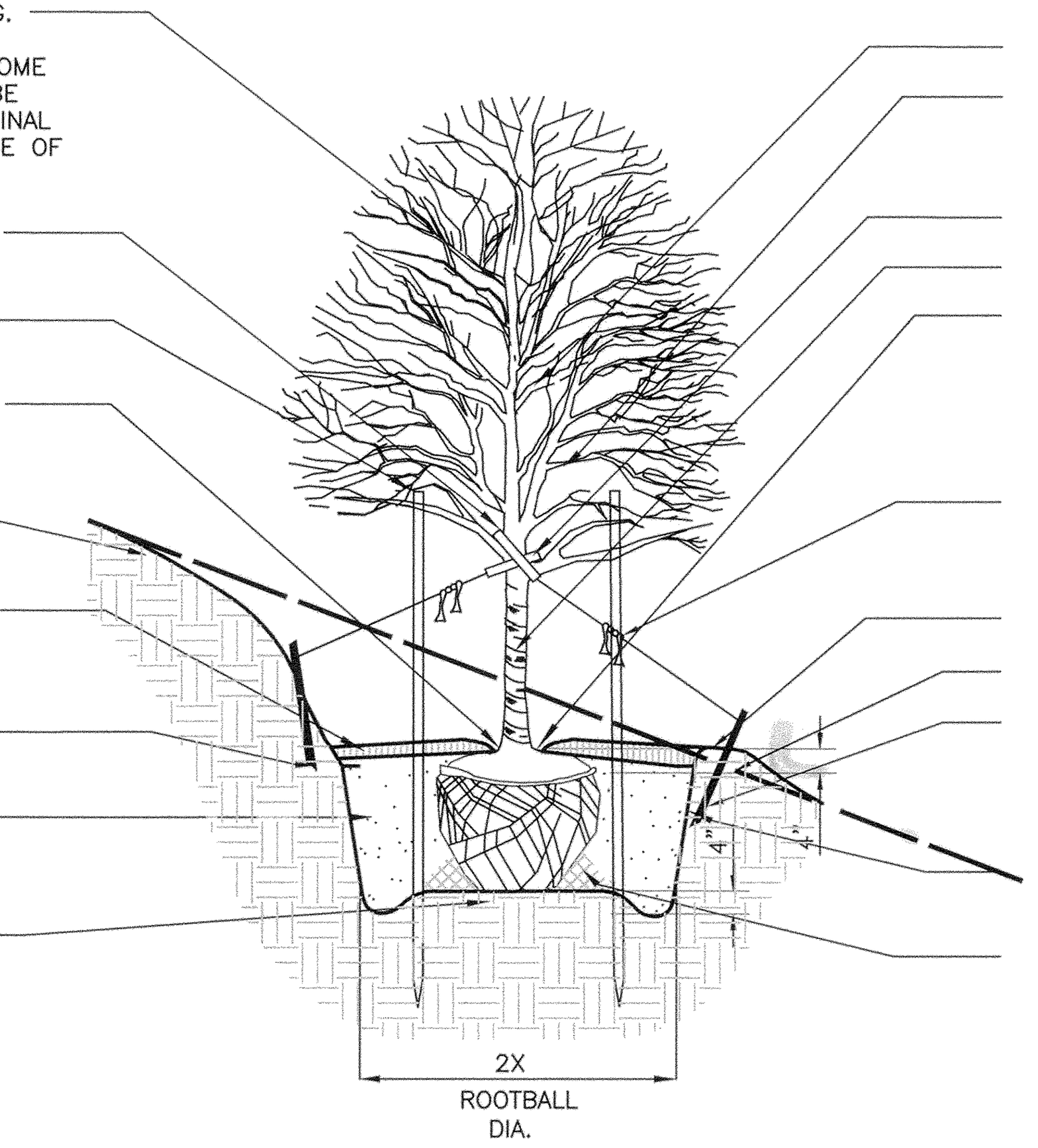

NOTES:
1. PROVIDE POSITIVE DRAINAGE UNDER ALL CIRCUMSTANCES. DRAINAGE SHOULD BE FROM CENTER OF ROOT BALL TO PERIMETER OF ROOT BALL. DO NOT ALLOW PONDING OF WATER UNDER ROOTBALL.
2. REMOVE TOP HALF OF WIRE BASKET AFTER PLACING ROOTBALL IN PLANT PIT.
3. REMOVE ROPE TIES & TOP 1/3 OF BURLAP FROM ROOT BALL AFTER PLANTING.
4. POLYPROPYLENE STRAPS MAY BE SUBSTITUTED IN LIEU OF WIRES, ARBORTIE OR EQUIVALENT.
5. SEE PLANTING SCHEDULE AND PLANTING NOTES FOR ADDITIONAL INFORMATION/REQUIREMENTS.

TYPICAL SLOPE PLANTING DETAIL

N.T.S.

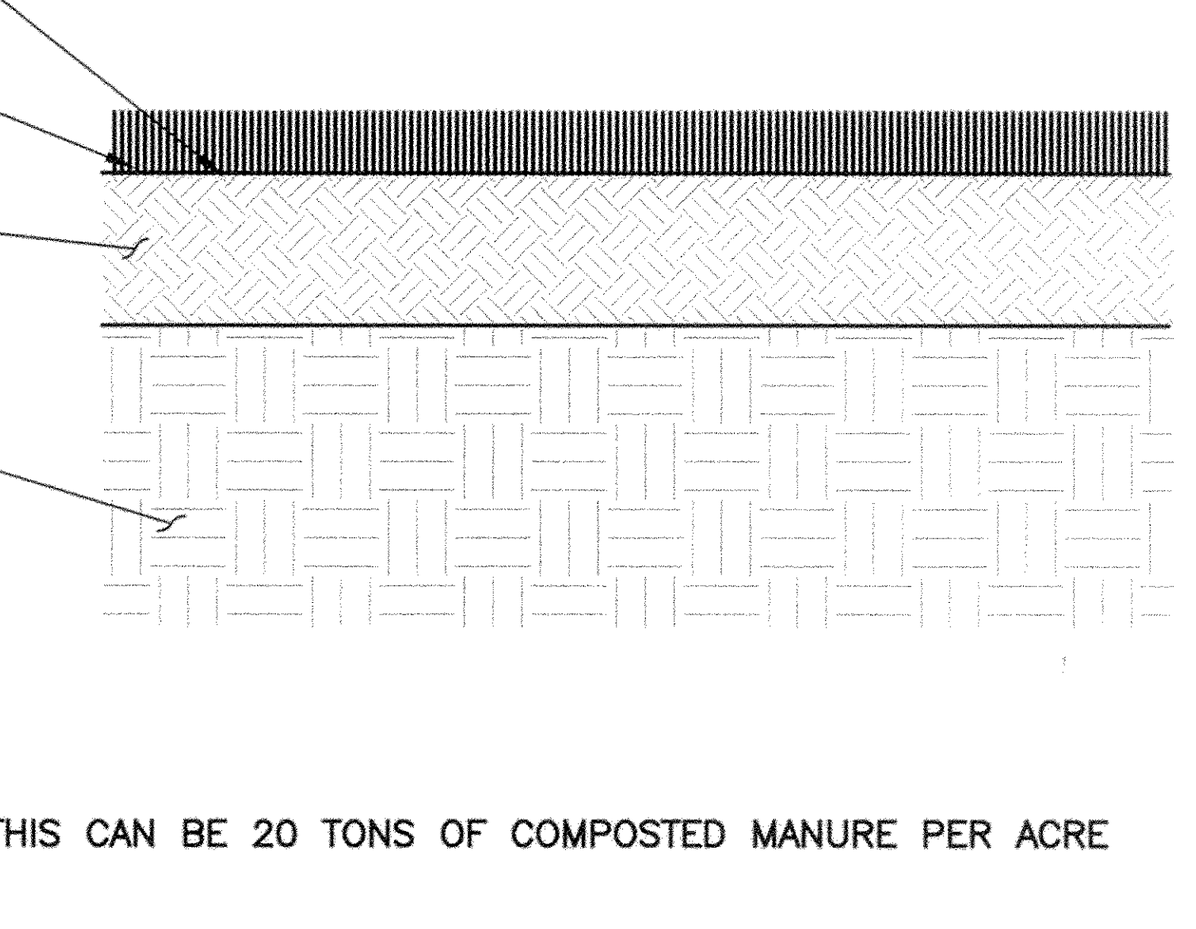

NOTES:
1. MINIMUM TOPSOIL DEPTH IS 4-6 INCHES.
2. TOPSOIL SHOULD HAVE A GOOD HUMUS CONTENT. THIS CAN BE 20 TONS OF COMPOSTED MANURE PER ACRE OR 170 BALES OF PEAT PER ACRE.
3. TOPSOIL WITH A PH OF 6 OR LESS WILL NEED A LIME AMENDMENT. EVENLY APPLY HYDRATED LIME OR GROUND LIMESTONE TO TOP SOIL UNTIL PH IS ADJUSTED TO BETWEEN 6-7. PH BELOW 5.5 OR ABOVE 7.5 IS UNACCEPTABLE FOR LAWNS.
4. 650 LBS OF SLOW RELEASE WELL BALANCED FERTILIZER 10-10-10 PER ACRE SHOULD BE HARROWED INTO THE TOPSOIL PRIOR TO SEEDING.
5. SEEDING IS BEST IN THE LATE SUMMER-EARLY AUTUMN. A HARROW MAY BE USED TO OBTAIN AN EVEN SURFACE THAT IS FIRM. THE SEED MAY BE MECHANICALLY SPREAD INTO THE SURFACE AS PER THE PLANTING SCHEDULE AND OR SPECIFICATIONS.
6. SEE SPECIFICATIONS FOR ADDITIONAL NOTES.

LAWN PLANTING DETAIL

N.T.S.

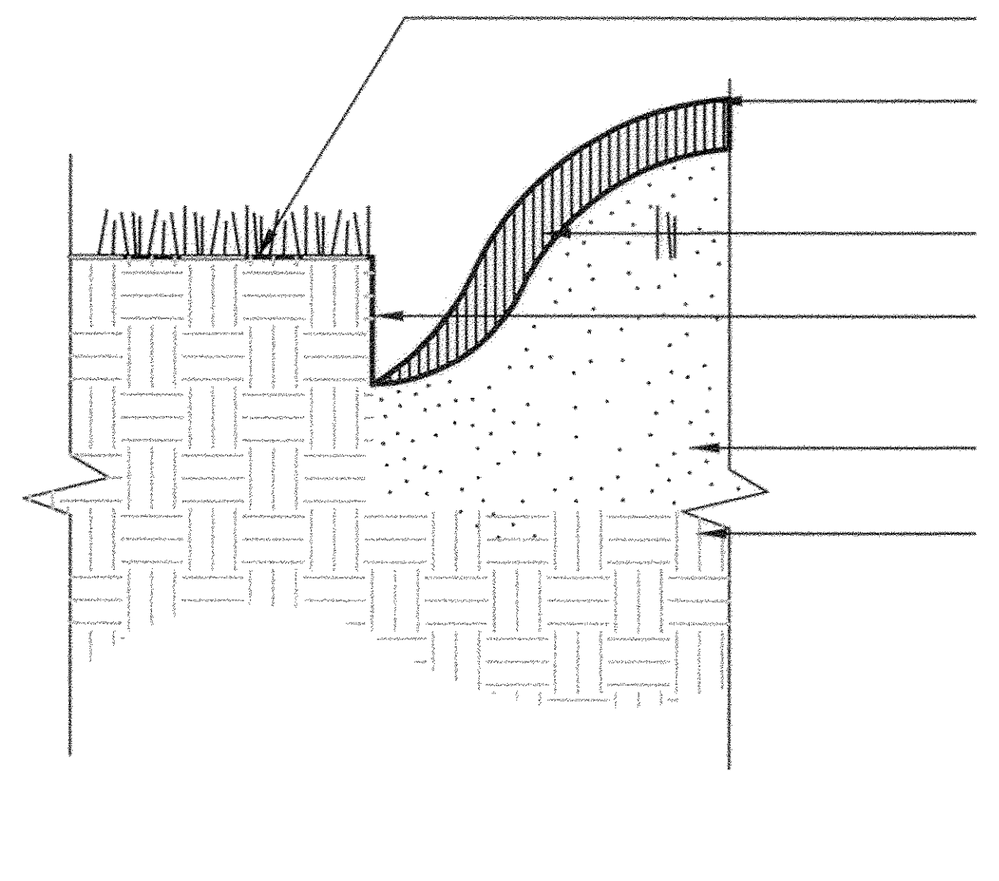

NOTES
1. INSTALL BED EDGE WHEN MULCHED AREAS ABUT LAWN AREAS. DO NOT INSTALL UNTIL LAWN IS ESTABLISHED AND SOIL IS FIRM. RE-MULCH EDGE IF SOIL GETS ON PREVIOUSLY INSTALLED MULCH DURING EDGE INSTALLATION.

PLANTING BED EDGE DETAIL

N.T.S.

REFERENCE

1. VERTICAL DATUM IS BASED UPON NAVD88, AS DETERMINED BY CIVIL & ENVIRONMENTAL CONSULTANTS, INC., USING SURVEY GRADE GPS MEASUREMENTS AND OPUS POST-PROCESSING.
2. FIELD SURVEY BY CIVIL & ENVIRONMENTAL CONSULTANTS, INC. DATED 09/27/2016.

ONE CALL SERIAL NO.: 20162702202

CALL BEFORE YOU DIG!
PENNSYLVANIA LAW REQUIRES 3 WORKING DAYS NOTICE FOR CONSTRUCTION PHASE AND 10 WORKING DAYS IN DESIGN STAGE-STOP CALL PENNSYLVANIA ONE CALL SYSTEM, INC.
1-800-242-1776

PENNSYLVANIA ACT 38 (1991) REQUIRES NO LESS THAN 3 WORKING DAYS NOTICE NOR MORE THAN 10 WORKING DAYS NOTICE FROM EXCAVATORS WHO ARE ABOUT TO: DIG, DRILL, BLAST, AUGER, BORE, GRADE, TRENCH, OR DEMOLISH WHEN IN THE CONSTRUCTION PHASE. FOR LOCATION REQUESTS IN THE STATE OF PENNSYLVANIA, CALL TOLL FREE 1-800-242-1776.
UNDERGROUND UTILITIES HAVE BEEN PLOTTED FROM AVAILABLE INFORMATION AND THE LOCATION MUST BE CONSIDERED APPROXIMATE, OTHER UNDERGROUND UTILITIES MAY EXIST WHICH ARE NOT SHOWN. IT WILL BE THE CONTRACTOR'S RESPONSIBILITY TO ASCERTAIN ALL PHYSICAL LOCATIONS OF UTILITY LINES PRIOR TO THE TIME OF CONSTRUCTION. IN NO WAY SHALL THE CONTRACTOR HOLD THE SURVEYOR RESPONSIBLE FOR ANY UTILITY LOCATION SHOWN ON THIS PLAN.
*HAND SIGNATURE ON FILE

PLAN BOOK	PAGE
365	24

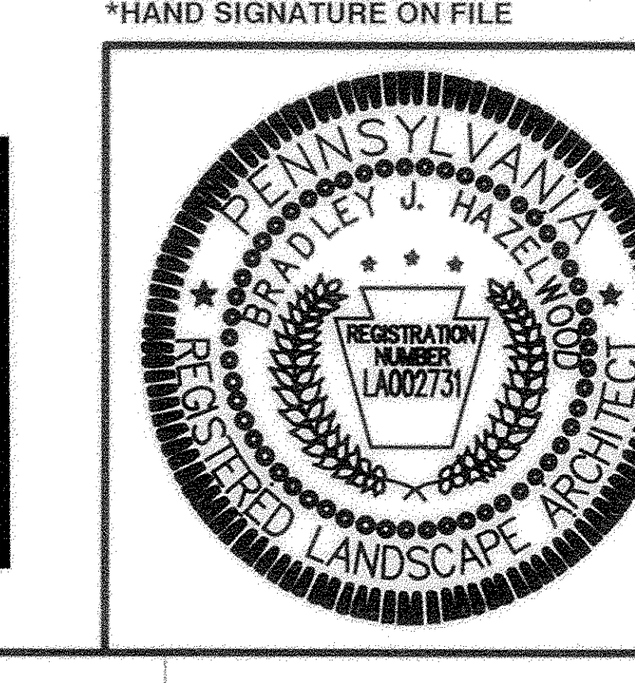

SUBMITTAL & REVISION RECORD

NO	DATE	DESCRIPTION
1	02/15/2017	LAND DEVELOPMENT SUBMISSION 01 TO MUDDY CREEK TOWNSHIP
2	02/21/2017	NPDES SUBMISSION 01 TO BUTLER COUNTY CONSERVATION DISTRICT
3	03/09/2017	RESPONSE TO COMMENTS FROM ENGINEER DATED 03/03/2017
4	03/29/2017	HART PRELIMINARY CIVIL SET SUBMISSION
5	03/30/2017	RESPONSE TO COMMENTS SUBMISSION TO BCCD DATED 3/14/2017
6	04/03/2017	FINAL LAND DEVELOPMENT PLAN SET SUBMISSION TO MUDDY CREEK TOWNSHIP
7	05/10/2017	RESPONSE TO COMMENTS FROM PTV DATED 05/01/2017 & FINAL SUBMISSION TO BCCD FOR NPDES PERMIT
8	07/13/2017	FINAL LAND DEVELOPMENT PLAN SET SUBMISSION TO MUDDY CREEK TOWNSHIP

Civil & Environmental Consultants, Inc.
333 Baldwin Road · Pittsburgh, PA 15205
412-429-2324 · 800-365-2324
www.cecinc.com

PTV XX, LLC
PORTERSVILLE DOLLAR GENERAL STORE
MUDDY CREEK TOWNSHIP
BUTLER COUNTY, PENNSYLVANIA

LANDSCAPE NOTES AND DETAILS

DATE:	FEBRUARY 15, 2017	DRAWN BY:	EJB/DMO
DWG SCALE:	N.T.S.	CHECKED BY:	*CJR
PROJECT NO:			163-826
APPROVED BY:			*GPQ

DRAWING NO.: C701

SHEET 12 OF 21

P:\2016\163-826\-CADD\Dwg\CV01\163826-CV01-C700.dwg{C701} LS:(5/9/2017 - abonnell) - LP: 7/17/2017 4:06 PM

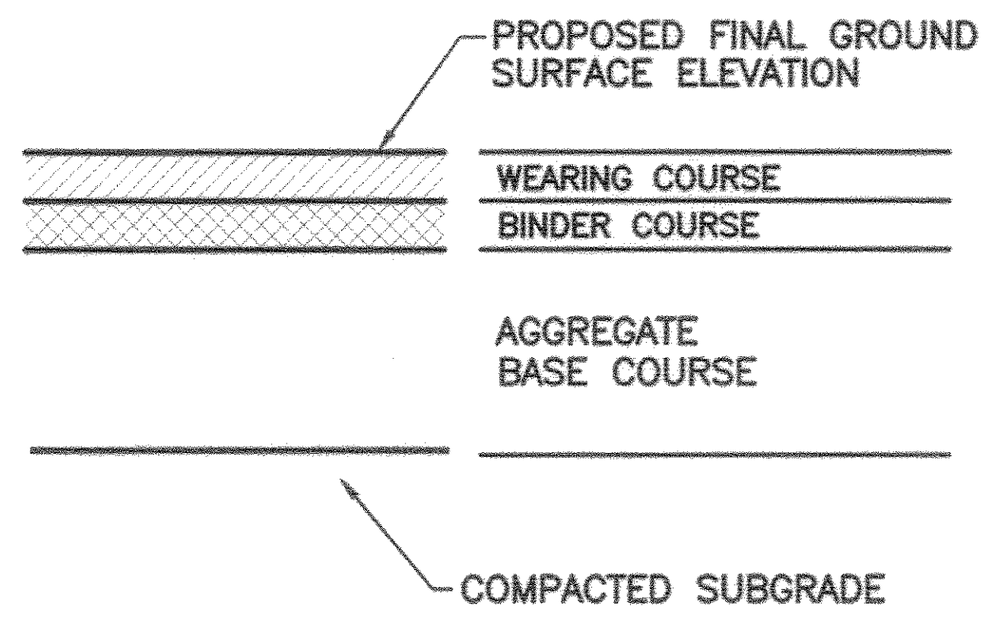

FLEXIBLE PAVEMENT SECTION

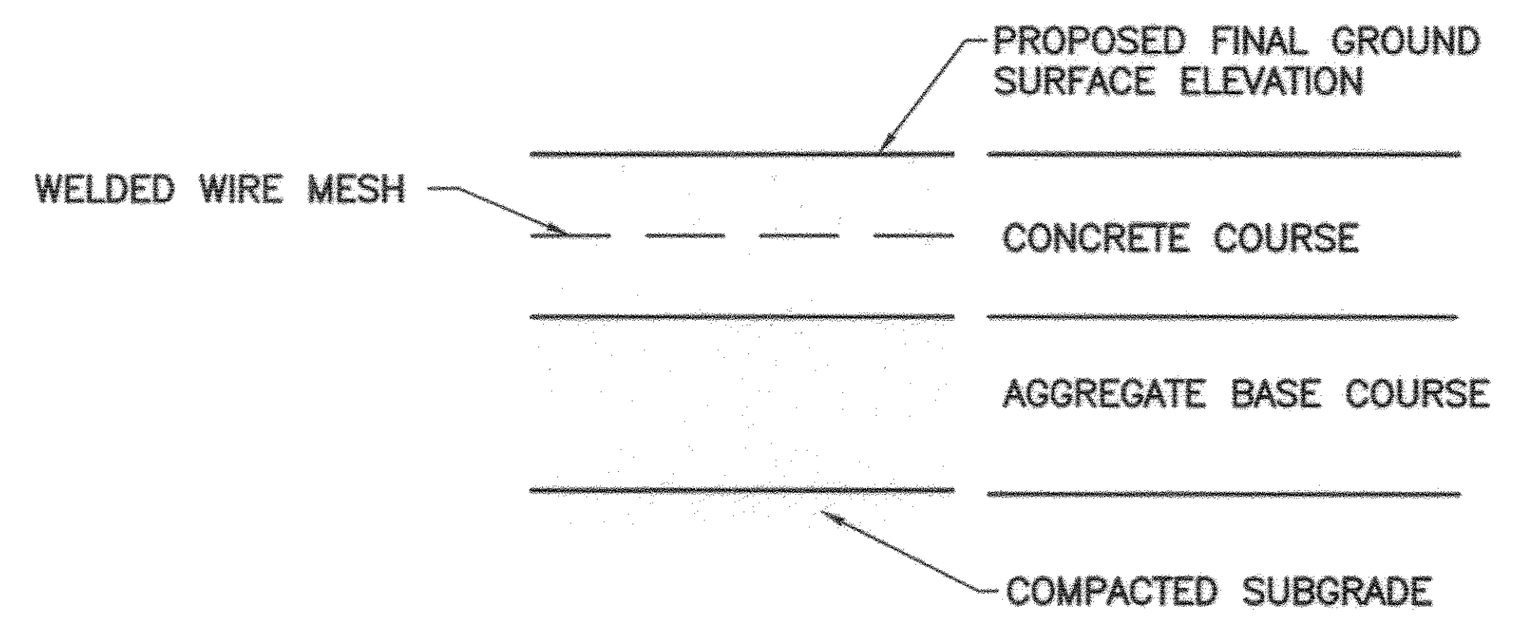

RIGID PAVEMENT SECTION

FLEXIBLE PAVEMENT			
PENNDOT PUBLICATION 408	ITEM	STANDARD DUTY PAVEMENT SECTION	HEAVY DUTY PAVEMENT SECTION
SECTION 420, 9.5mm SUPERPAVE MIX	BITUMINOUS WEARING COURSE	1.5"	2.0"
SECTION 421, 19mm SUPERPAVE MIX	BITUMINOUS BINDER COURSE	2.5"	2.5"
SECTION 703, 2A COARSE AGGREGATE	AGGREGATE BASE COURSE	6.0"	6.5"
RIGID PAVEMENT			
PENNDOT PUBLICATION 408	ITEM	STANDARD DUTY PAVEMENT SECTION	HEAVY DUTY PAVEMENT SECTION
SECTION 704, TYPE: AAA CONCRETE	CEMENT CONCRETE COURSE	5.0"	6.0"
SECTION 703, 2A COARSE AGGREGATE	AGGREGATE BASE COURSE	6.0"	6.0"

PAVEMENT SECTION WITHIN PENNDOT RIGHT-OF-WAY	
LAYER DESCRIPTION	PAVEMENT SECTION DEPTH
9.5 mm SUPERPAVE SRL–M MIX, HMA WEARING COURSE PG 64–22, 0.3–3 MILLION ESAL'S	1.5"
25 mm SUPERPAVE MIX, HMA BASE COURSE PG 64–22, 0.3–3 MILLION ESAL'S	6.0"
PENNDOT 2A SUBBASE	18.0"

NOTES:

1. PRIOR TO PLACEMENT OF AGGREGATE, THE PAVEMENT SUBGRADE SHALL BE PREPARED AS FOLLOWS:
   A. PAVEMENT SUBGRADE SHALL BE PROOFROLLED AND COMPACTED TO AT LEAST 95% OF ITS MAXIMUM DRY DENSITY AND WITHIN ±3% OF ITS OPTIMUM MOISTURE CONTENT, AS DETERMINED BY ASTM D1557 (MODIFIED PROCTOR). ANY SOFT AREAS SHALL BE OVEREXCAVATED TO A FIRM AND COMPETENT MATERIAL AND BACKFILLED AS DESCRIBED IN 1B.
   B. ALL APPROVED FILL SHALL BE PLACED IN MAXIMUM 8" THICK, LOOSE LIFTS AND COMPACTED TO 95% OF ITS MAXIMUM DRY DENSITY AND WITHIN ±3% OF ITS OPTIMUM MOISTURE CONTENT. THE FILL MATERIAL'S MAXIMUM DRY DENSITY AND OPTIMUM MOISTURE CONTENT SHALL BE DETERMINED BY ASTM D1557 (MODIFIED PROCTOR).
   C. AFTER COMPACTION, THE PAVEMENT SUBGRADE SHALL PROVIDE A FIRM UNYIELDING FOUNDATION WITH NO SUDDEN, SHARP OR ABRUPT CHANGES OR BREAKS IN GRADES. NO STANDING WATER OR EXCESS MOISTURE SHALL BE PRESENT. ALL SOFT AND YIELDING AREAS SHALL BE REWORKED BY OVEREXCAVATING TO A FIRM AND COMPETENT MATERIAL, AND BACKFILLED AS DESCRIBED IN 1B.
   D. THE SUBGRADE SHALL BE GRADED AND SHAPED AS REQUIRED TO CONSTRUCT THE AGGREGATE BASE COURSE IN CONFORMANCE WITH THE GRADES, LINES AND THICKNESSES SHOWN ON THE DRAWINGS.
2. THE BITUMINOUS COURSES SHALL BE TAPERED INTO THE STORM SEWER INLETS WHILE MAINTAINING FULL PAVEMENT SECTION DEPTH.
3. REINFORCED CONCRETE COURSE SHALL CONTAIN ONE LAYER OF CONTINUOUS 6"x6" 2.9 W.W.M. WITH 8" LAP AT EDGES TO BE PLACED IN CONCRETE AT THE MIDPOINT OF THE CONCRETE PAD. CONCRETE COURSE SHALL BE 4,000 PSI AIR ENTRAINED CONCRETE.
4. PAVEMENT SECTION DESIGN OBTAINED FROM 'GEOTECHNICAL ENGINEERING SERVICES REPORT', PREPARED BY PROFESSIONAL SERVICES INDUSTRIES, INC. DATED JANUARY 3, 2017.

DETAIL 801
PAVEMENT SECTIONS
N.T.S.

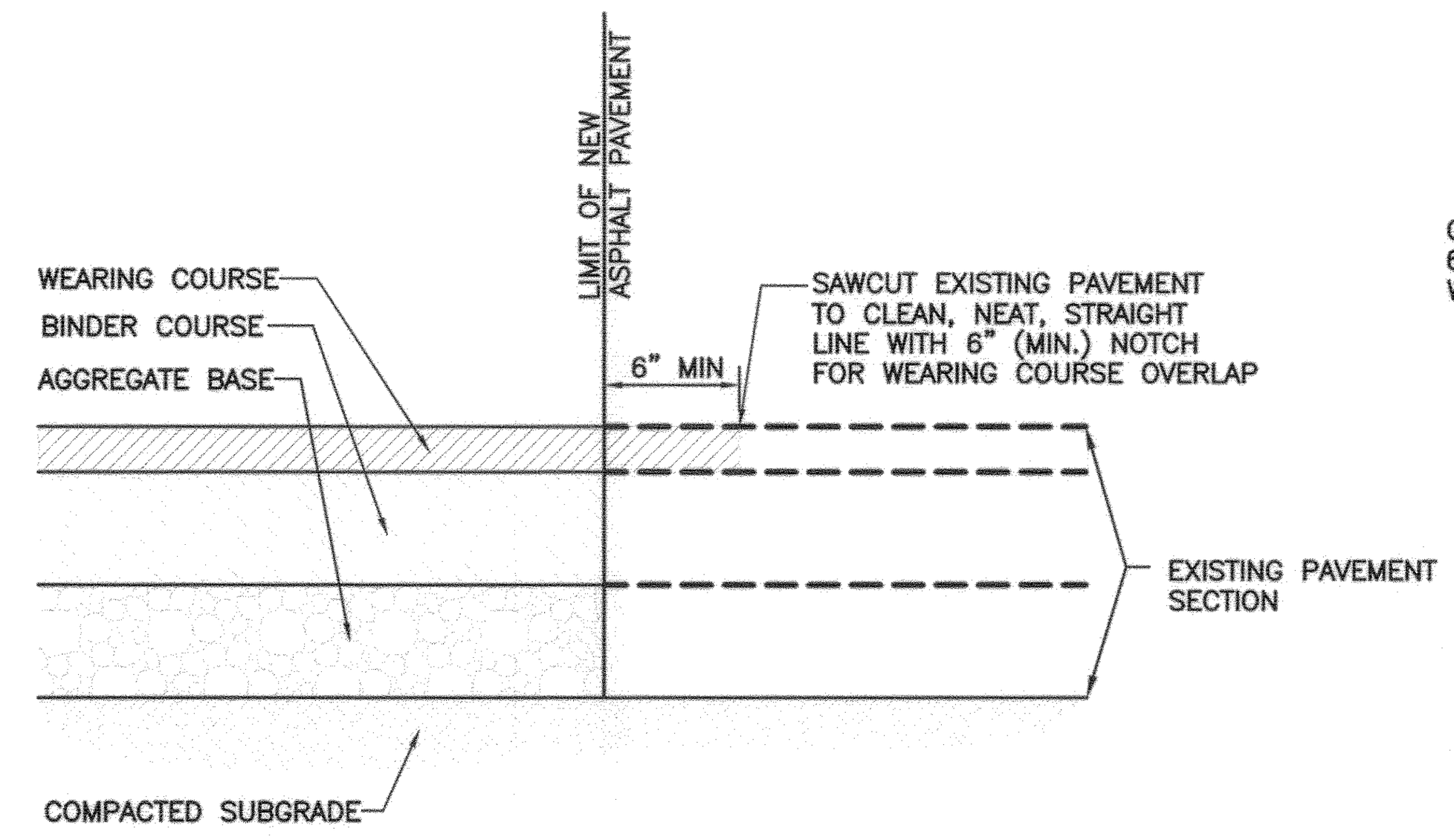

NOTES:

1. PROVIDE TACK COAT ALONG SAWCUT TO BIND EXISTING PAVEMENT TO NEW PAVEMENT. FOR AREAS WITH PATCHING AND OVERLAY, PROVIDE TACK COAT TO BIND EXISTING PAVEMENT WITH NEW ASPHALT.
2. REFER TO ASPHALT PAVEMENT SECTION DETAIL ON THIS SHEET FOR ADDITIONAL INFORMATION REGARDING PAVEMENT SECTIONS.

DETAIL 802
PAVEMENT SAWCUT
N.T.S.

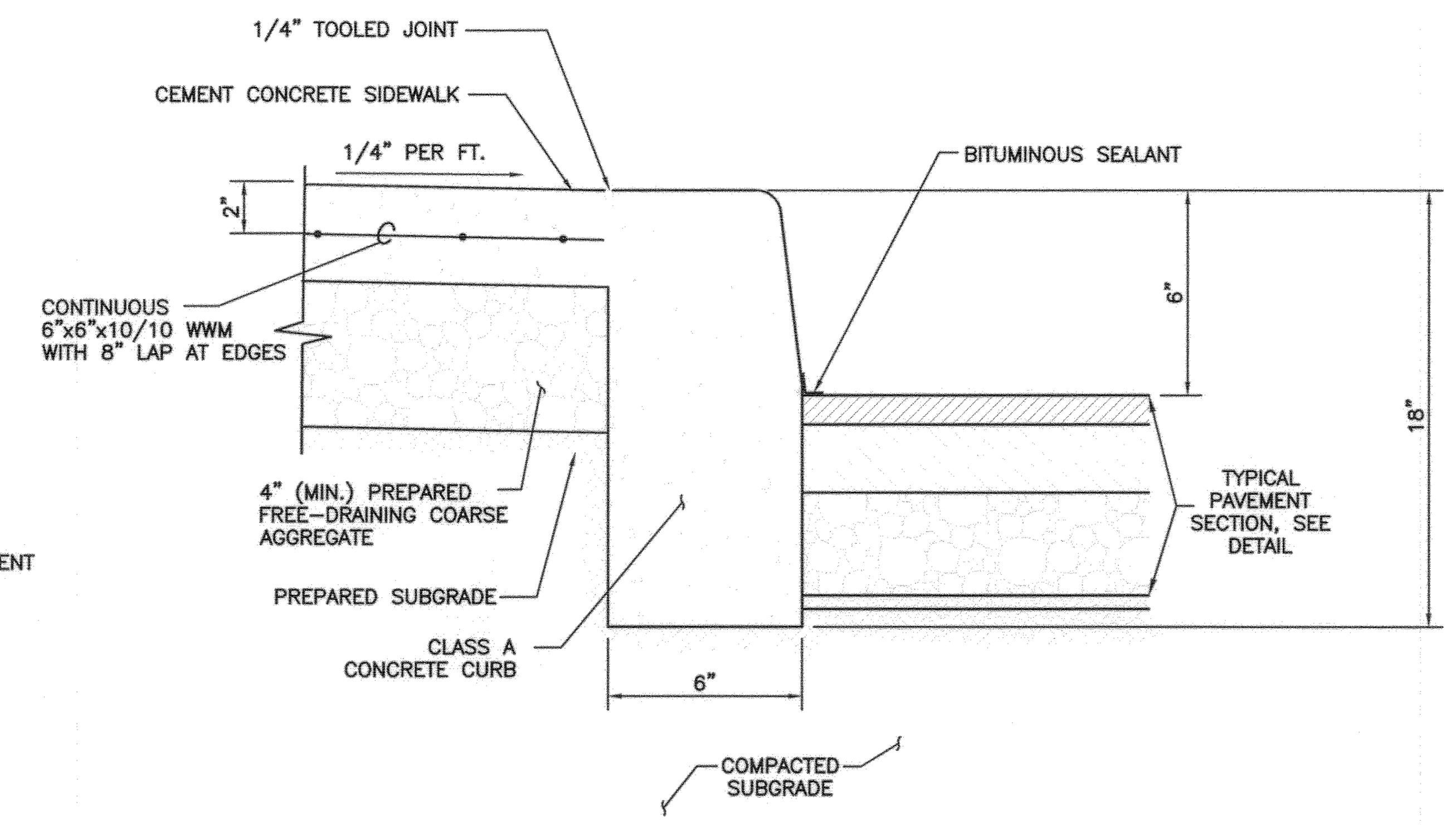

INTEGRAL CONCRETE CURB AT SIDEWALK

NOTES:

1. PROVIDE ½" PRE–MOLDED EXPANSION JOINT FILLER WITH SEALANT AT MAXIMUM INTERVALS OF 20' ON–CENTER.
2. BITUMINOUS SEALANT SHALL BE ASPHALT CEMENT, CLASS AC–20.
3. REFER TO CONCRETE SIDEWALK DETAIL FOR CONTINUATION.

DETAIL 803
INTEGRAL CONCRETE CURB AND SIDEWALK
N.T.S.

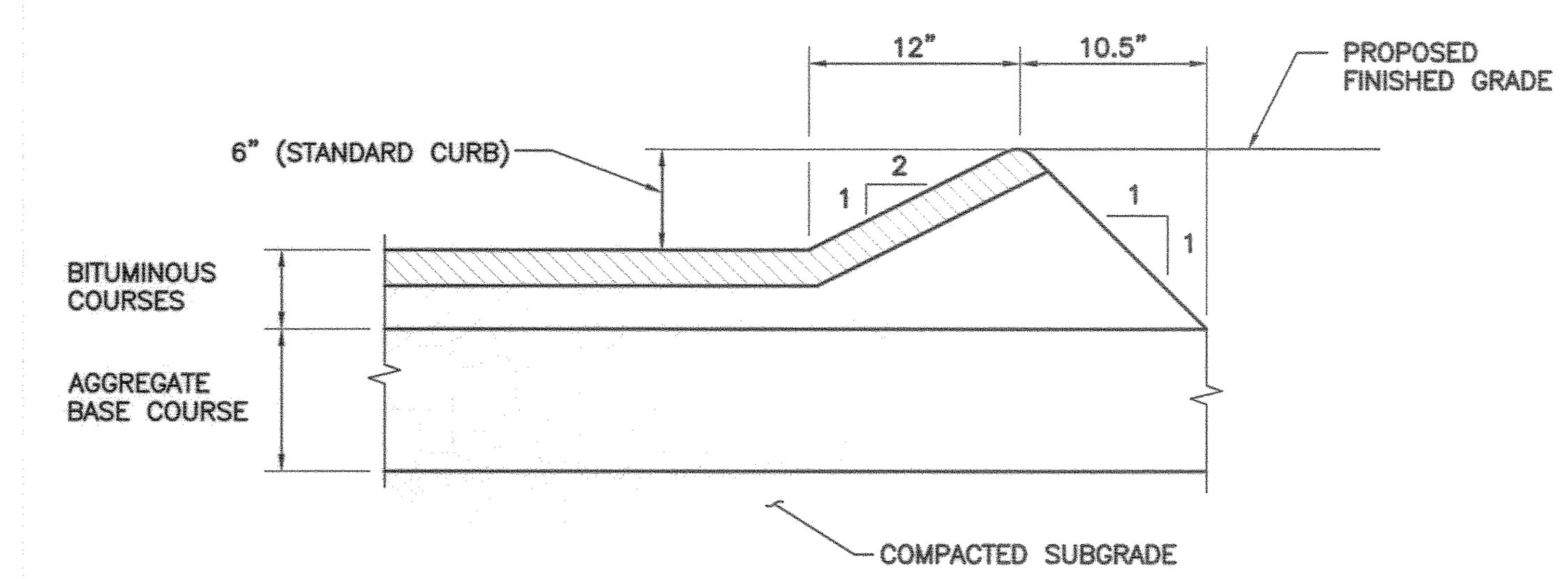

FLEXIBLE PAVEMENT APPLICATION

DETAIL 804
ASPHALT WEDGE CURB
N.T.S.

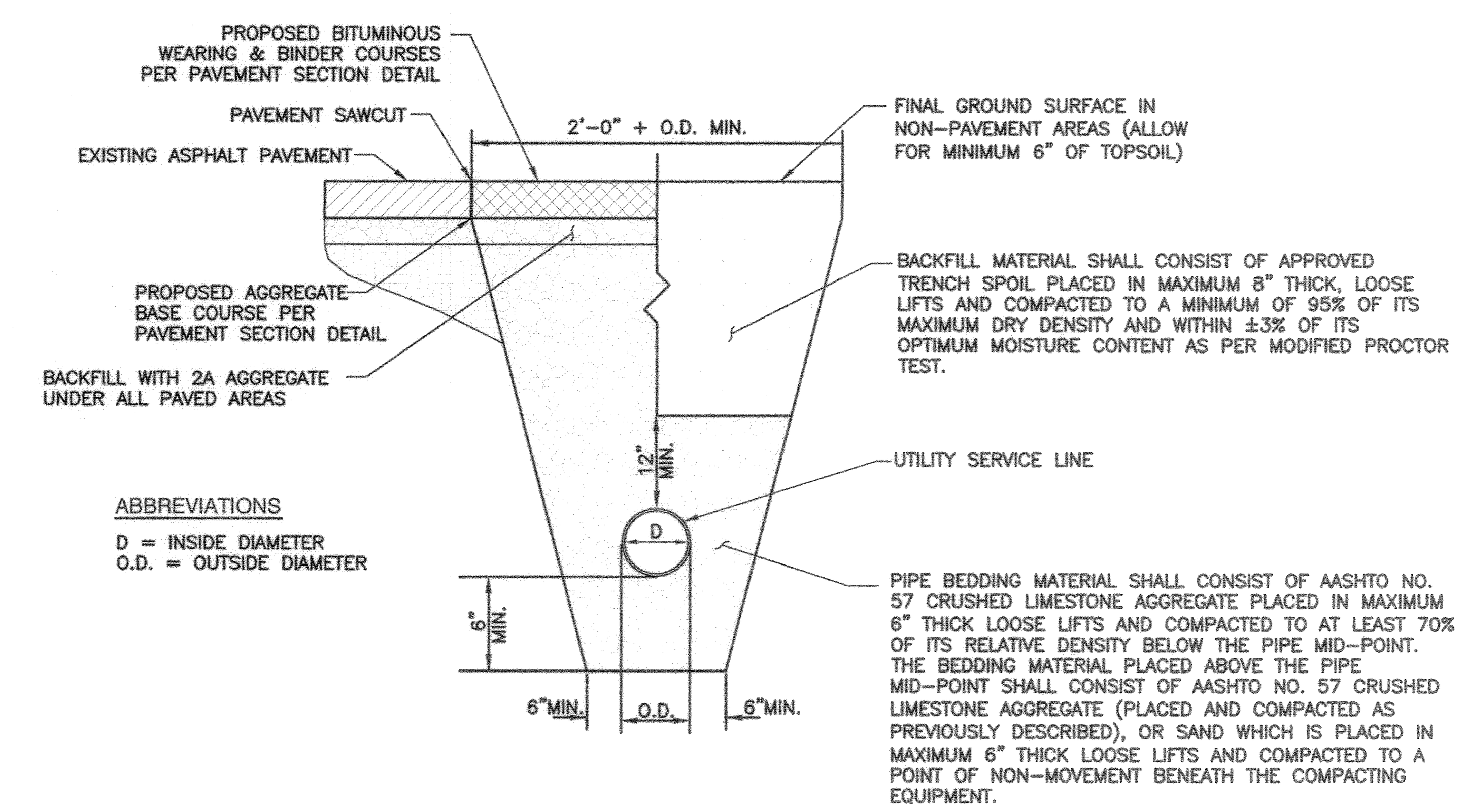

ABBREVIATIONS

D = INSIDE DIAMETER
O.D. = OUTSIDE DIAMETER

NOTES:

1. ALL MATERIALS EXCAVATED FROM THE UTILITY TRENCH SHALL BE STOCKPILED A MINIMUM SUFFICIENT DISTANCE FROM ALL TRENCHES TO PREVENT SLIDES OR CAVE–INS.
2. ALL BACKFILL MATERIALS SHALL BE APPROVED BY THE OWNER OR THEIR REPRESENTATIVE BEFORE BEING PLACED.
3. AASHTO NO. 57 CRUSHED LIMESTONE AGGREGATE AND NO. 2A CRUSHED STONE AGGREGATE SHALL SATISFY THE REQUIREMENTS OF PENNDOT PUBLICATION 408, SECTION 703.
4. THE MAXIMUM DRY DENSITY AND OPTIMUM MOISTURE CONTENT FOR THE BACKFILL MATERIALS SHALL BE DETERMINED BY ASTM D1557, AND THE RELATIVE DENSITY OF THE AASHTO NO. 57 AGGREGATE SHALL BE DETERMINED BY ASTM D4253 AND ASTM D4254.
5. THE CONTRACTOR SHALL CONSTRUCT THE UTILITY TRENCHES AND PROVIDE ADEQUATE SHORING (WHERE NECESSARY) IN CONFORMANCE WITH THE LATEST REQUIREMENTS FOR CONSTRUCTION STANDARD FOR EXCAVATIONS (29 CFR PART 1926.650–.652 SUBPART P) PROMULGATED BY OSHA.
6. THE CONTRACTOR SHALL VERIFY THAT THE MINIMUM SPECIFIED PIPE COVER IS PROVIDED BETWEEN THE FINAL GROUND SURFACE AND TOP OF PIPE BEFORE LAYING PIPE. PROVIDE A MINIMUM OF 2 FT. OF COVER ABOVE ALL PIPES DURING CONSTRUCTION.
7. INCREASE TRENCH WIDTH AS NECESSARY TO ALLOW FOR PROPER COMPACTION OF BEDDING/BACKFILL.
8. FURNISH AND INSTALL DETECTABLE WARNING TAPE FOR EACH UNDERGROUND UTILITY LINE, PER MANUFACTURER'S SPECIFICATIONS.
9. CONTRACTOR SHALL USE 5" SCHEDULE 80 ELECTRICAL CONDUIT FOR UNDERGROUND MAIN ELECTRICAL ENTRANCE TO THE BUILDING.

COVER REQUIREMENTS

UTILITY	MINIMUM COVER REQUIRED*
SANITARY SEWER	4.0 FT.
WATER LINE	4.0 FT.
GAS LINE	2.0 FT.
TELEPHONE/CABLE CONDUITS	2.5 FT.
ELECTRIC CONDUITS	3.5 FT.

* AS MEASURED FROM TOP OF PIPE TO FINAL GROUND SURFACE

DETAIL 807
TYPICAL UTILITY TRENCH DETAIL
N.T.S.

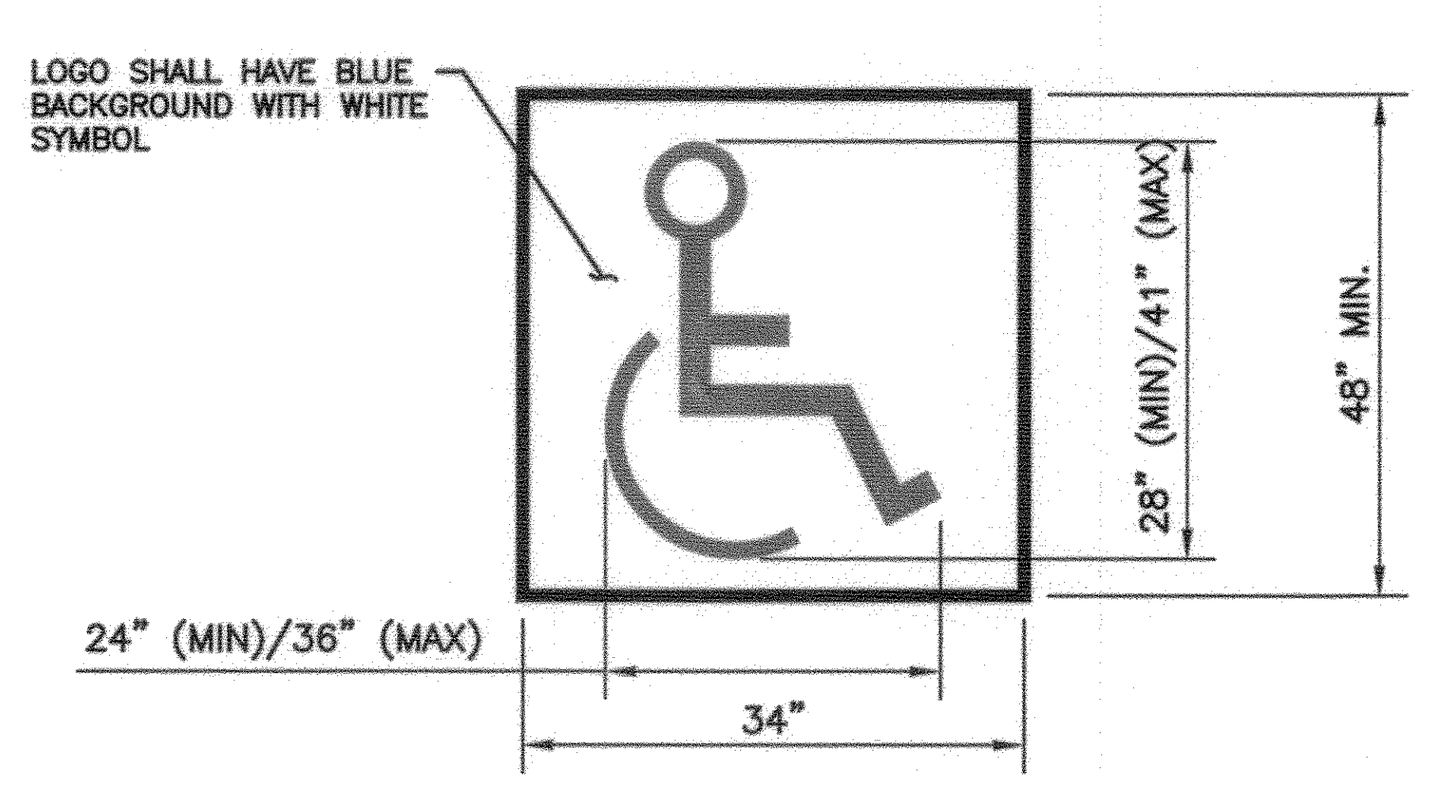

ADA ACCESSIBLE SPACE

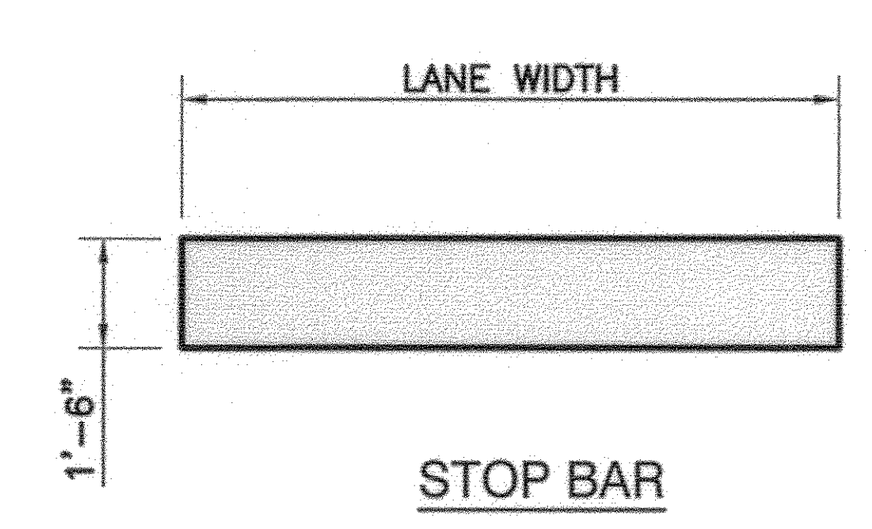

STOP BAR

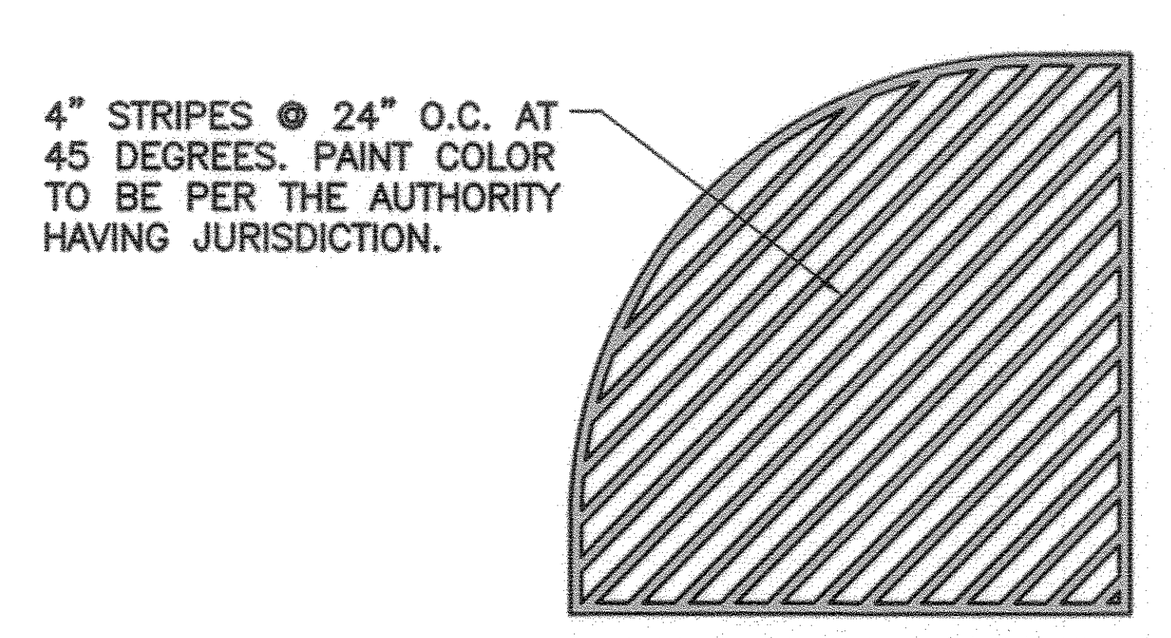

NO PARKING ZONE STRIPING

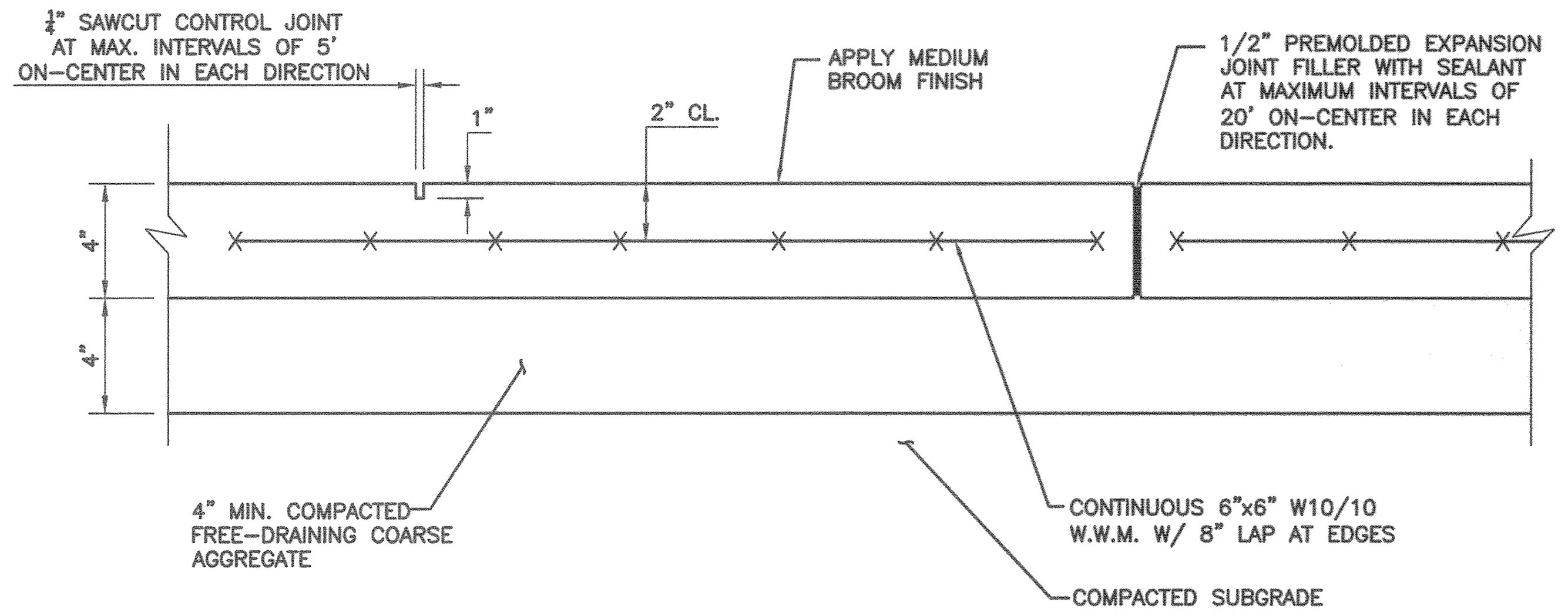

NOTES:

1. PROVIDE 1/2" EXPANSION JOINT FILLER WITH SEALANT WHERE THE CONCRETE SIDEWALK ABUTS THE BUILDING.
2. PROVIDE MEDIUM BROOM FINISH.
3. CONCRETE SHALL BE 3,500 PSI AIR ENTRAINED CONCRETE UNLESS OTHERWISE NOTED.

DETAIL 805
CONCRETE SIDEWALK
N.T.S.

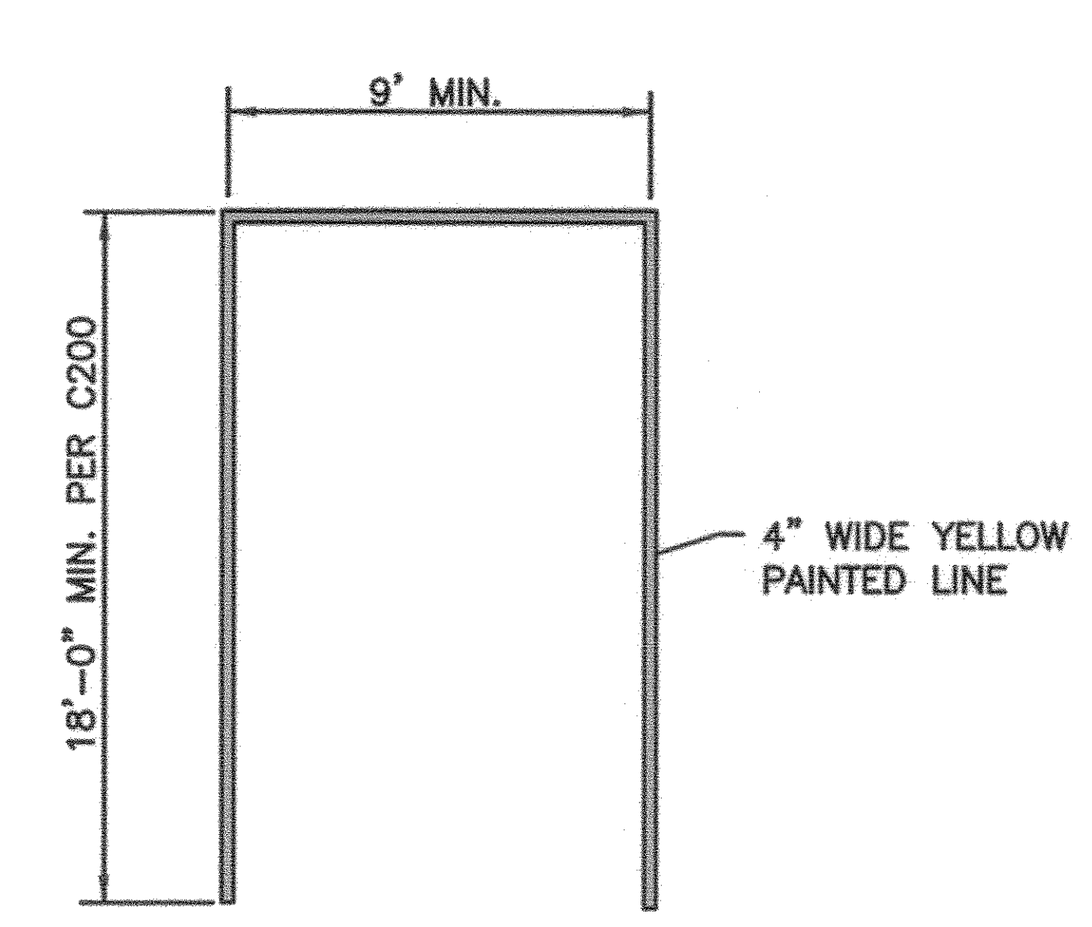

PARKING STALL STRIPING

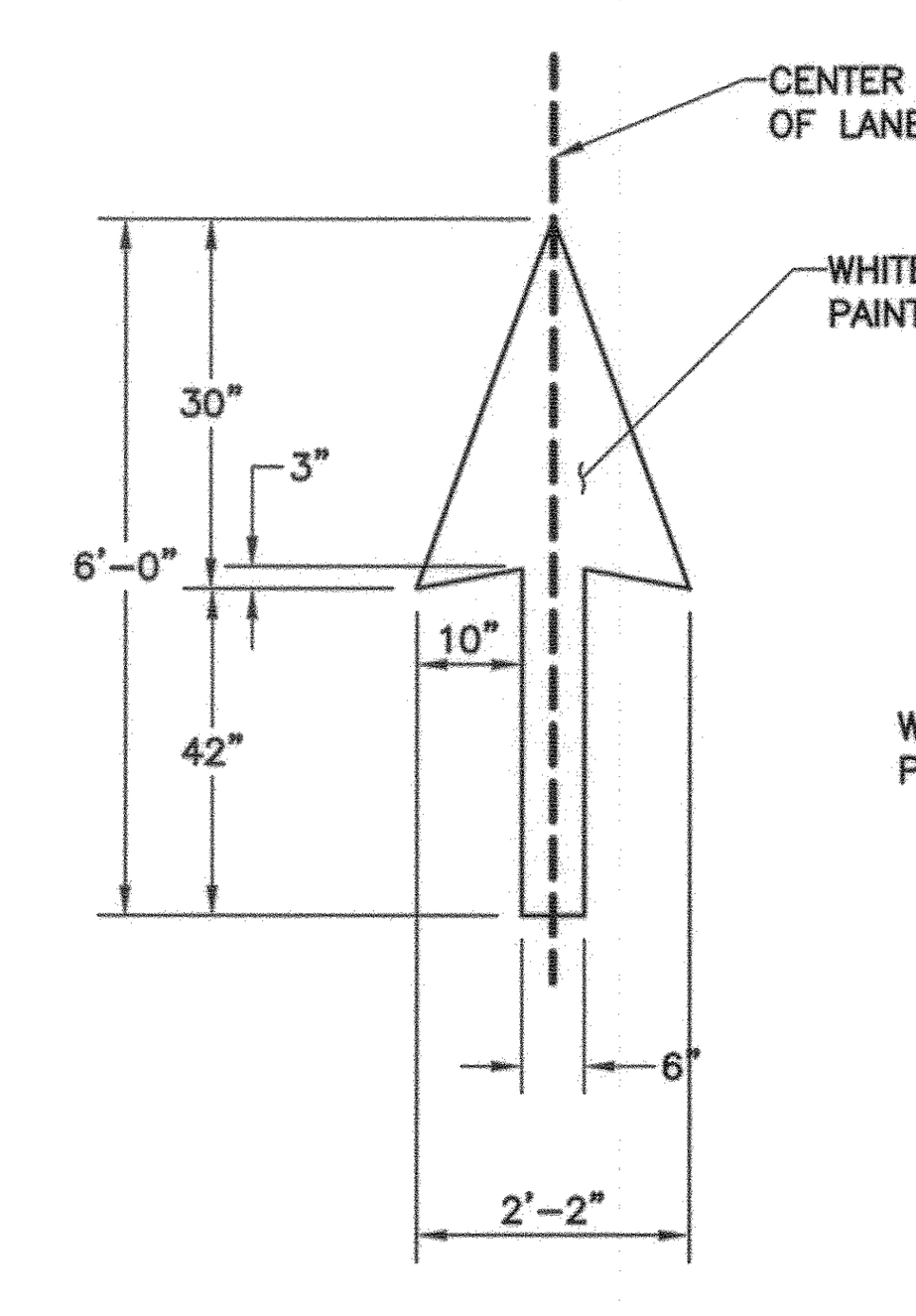

THROUGH ARROW

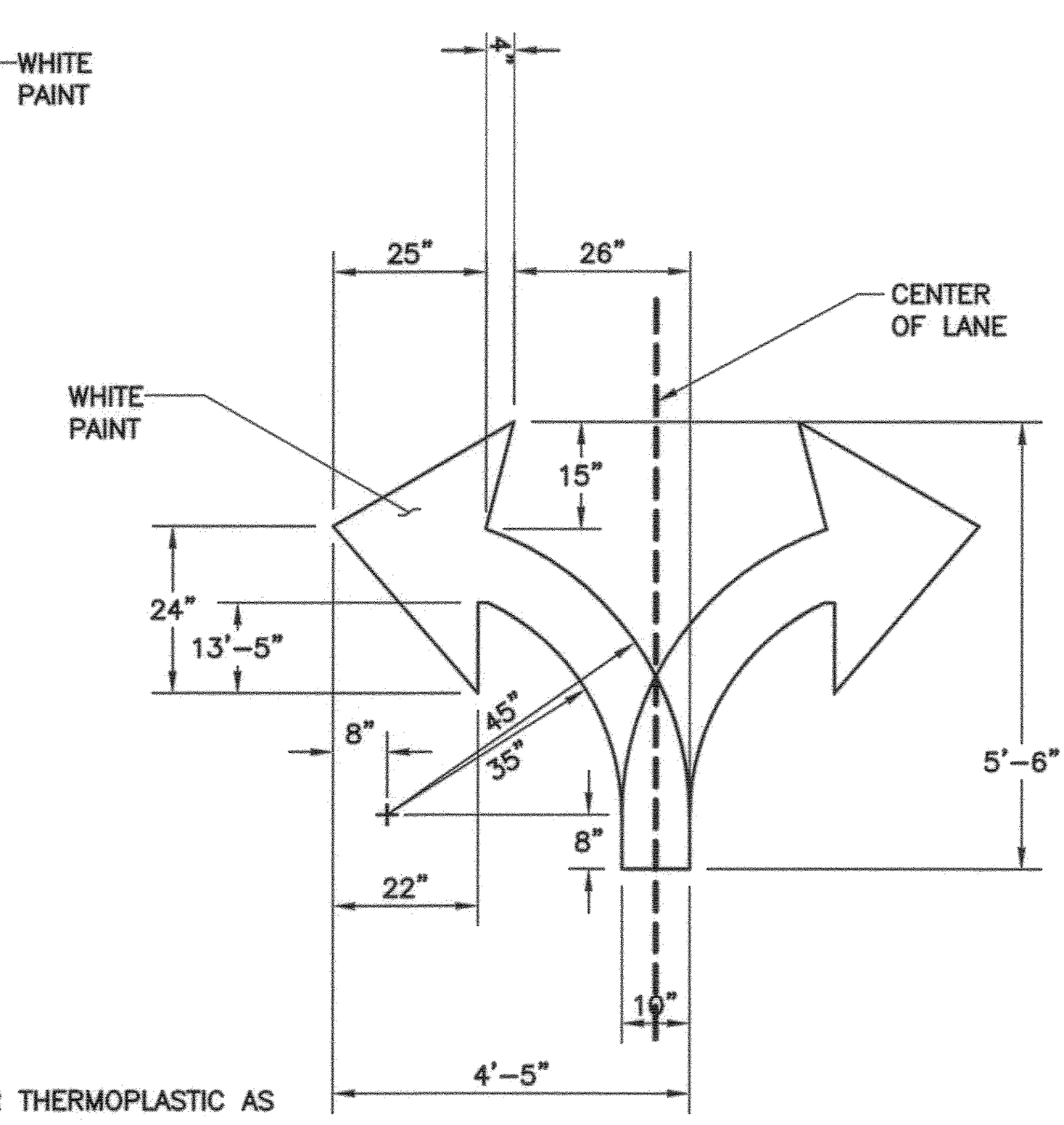

TURN ARROW

NOTES:

1. ALL TRAFFIC FLOW ARROWS TO BE SOLID WHITE NON–REFLECTIVE TRAFFIC PAINT OR THERMOPLASTIC AS PER DIMENSIONS AND AS SPECIFIED ON PROJECT PLANS.
2. STRIPING SHALL HAVE TWO COATS OF PAINT, ALKYD BASE SYNTHETIC RESIN, FED. SPEC. TTP–115 TYPE 1 (OR APPROVED EQUAL). IF SEAL COAT IS USED, IT SHALL BE COMPATIBLE WITH STRIPING COMPOUND.
3. PARKING LOT MARKINGS AND STRIPING TO MEET PENNSYLVANIA DEPARTMENT OF TRANSPORTATION SPECIFICATIONS AND THE MANUAL ON UNIFORM TRAFFIC CONTROL DEVICES FOR STREETS AND HIGHWAYS.

DETAIL 806
TYPICAL PAVEMENT MARKINGS
N.T.S.

PLAN BOOK	PAGE
365	25

SUBMITTAL & REVISION RECORD

NO	DATE	DESCRIPTION
1	02/15/2017	LAND DEVELOPMENT SUBMISSION 01 TO MUDDY CREEK TOWNSHIP
2	02/21/2017	NPDES SUBMISSION 01 TO BUTLER COUNTY CONSERVATION DISTRICT
3	03/09/2017	RESPONSE TO COMMENTS FROM ENGINEER DATED 03/03/2017
4	03/29/2017	HART PRELIMINARY CIVIL SET SUBMISSION
5	03/30/2017	RESPONSE TO COMMENTS SUBMISSION TO BCCD DATED 3/14/2017
6	04/03/2017	FINAL LAND DEVELOPMENT PLAN SET SUBMISSION TO MUDDY CREEK TOWNSHIP
7	05/10/2017	RESPONSE TO COMMENTS FROM PTV DATED 05/01/2017 & FINAL SUBMISSION TO BCCD FOR NPDES PERMIT
8	07/13/2017	FINAL LAND DEVELOPMENT PLAN SET SUBMISSION TO MUDDY CREEK TOWNSHIP

Civil & Environmental Consultants, Inc.
333 Baldwin Road · Pittsburgh, PA 15205
412-429-2324 · 800-365-2324
www.cecinc.com

PTV XX, LLC
PORTERSVILLE DOLLAR GENERAL STORE
MUDDY CREEK TOWNSHIP
BUTLER COUNTY, PENNSYLVANIA

SITE CONSTRUCTION DETAILS

DATE:	FEBRUARY 15, 2017	DRAWN BY:	EJB/DMO
DWG SCALE:	AS SHOWN	CHECKED BY:	*CJR
PROJECT NO:	163-826	APPROVED BY:	*GPQ

*HAND SIGNATURE ON FILE

COMMONWEALTH OF PENNSYLVANIA REGISTERED PROFESSIONAL CHRISTOPHER J. REMLEY ENGINEER NO. 079995

DRAWING NO.: C800
SHEET 13 OF 21

P:\2016\163-826\-CADD\Dwg\CV01\163826-CV01-C800.dwg[C800] LS:(5/10/2017 - ebrice) - LP: 7/17/2017 4:06 PM

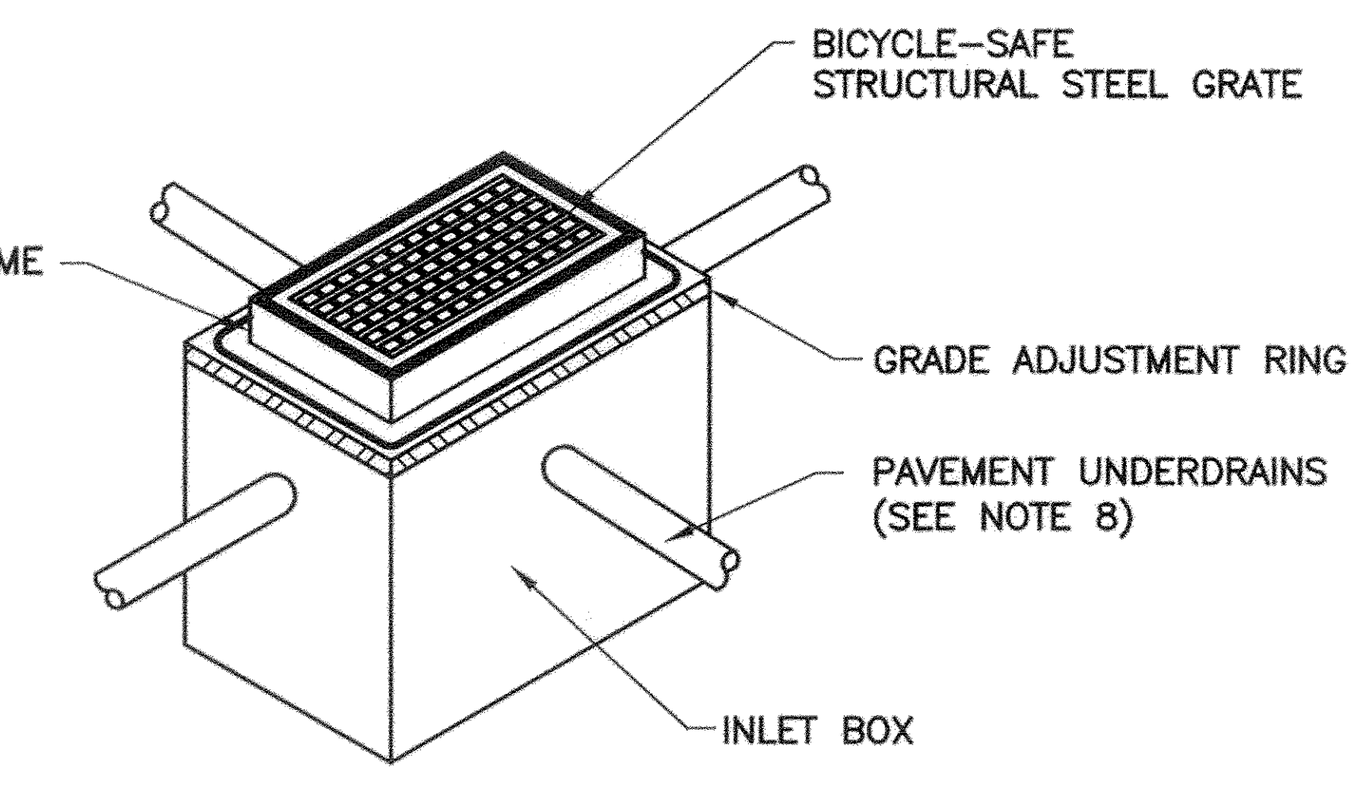

INLET BOX WITH TYPE M FRAME

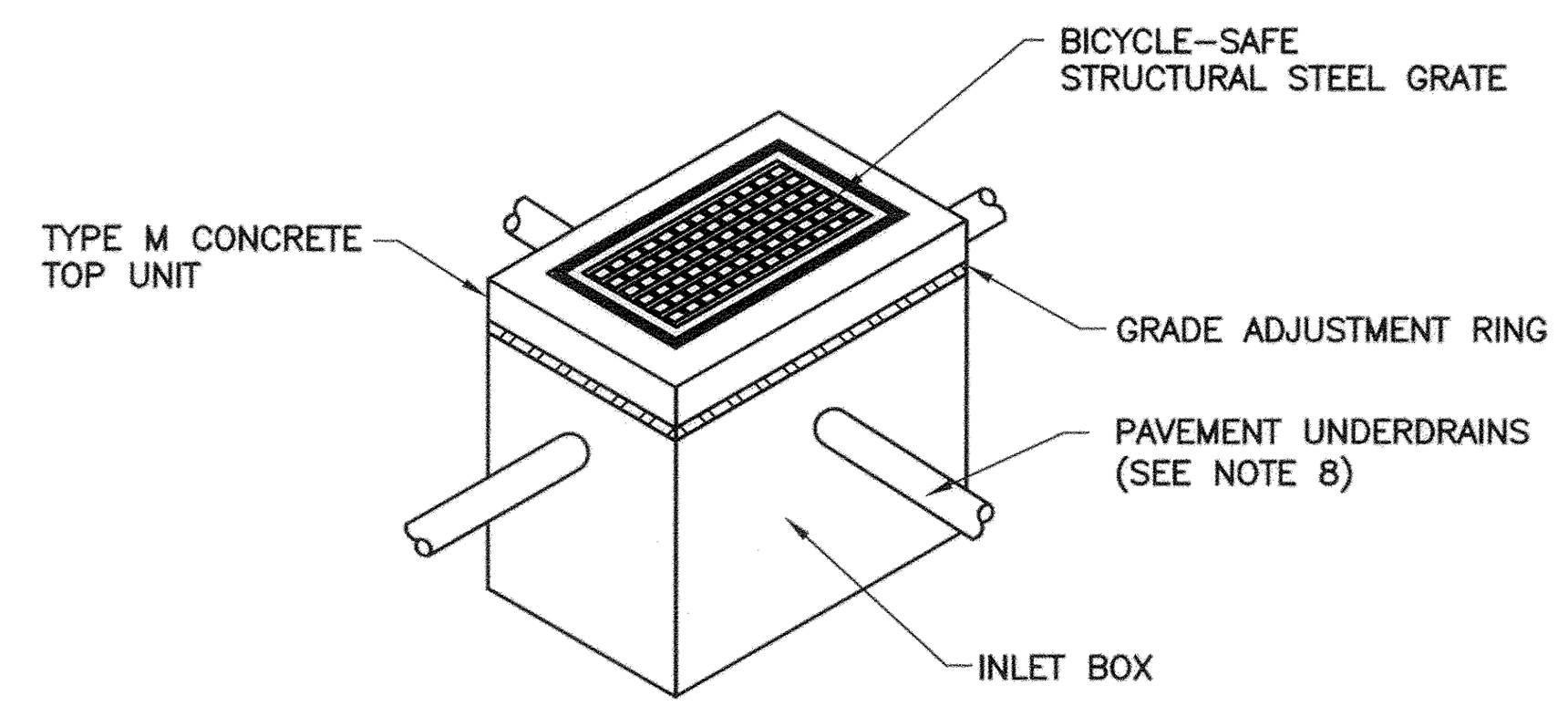

CONCRETE TOP UNIT - TYPE M

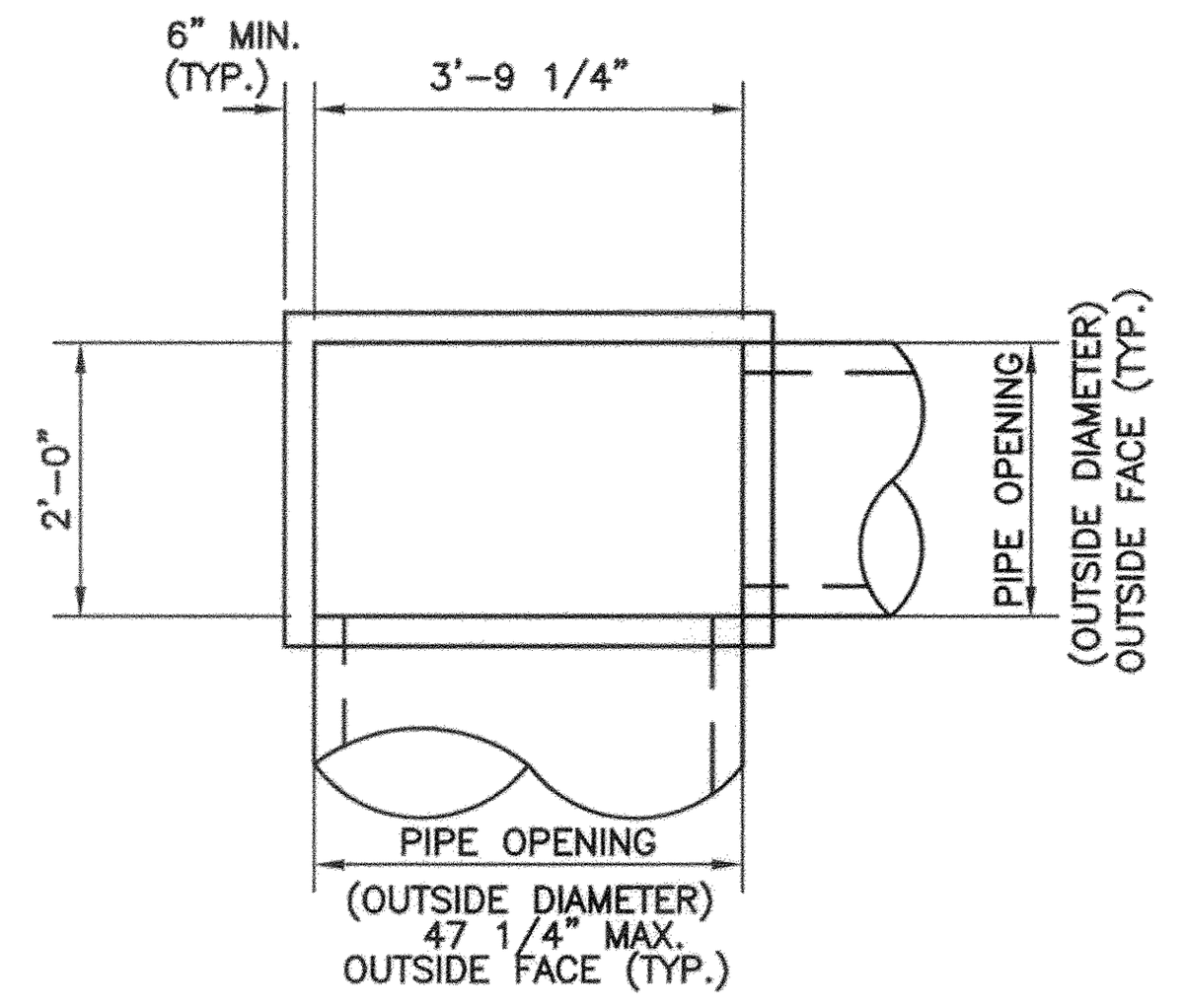

STANDARD INLET BOX - PLAN VIEW

NOTES:

1. PROVIDE MATERIALS AND PERFORM WORK IN ACCORDANCE WITH THE LATEST EDITION OF THE PENNDOT PUBLICATION 408 SPECIFICATIONS.
2. REFER TO PENNDOT BUREAU OF HIGHWAY DESIGN STANDARDS FOR ROADWAY CONSTRUCTION, SERIES RC–45 AND RC–46, CURRENT EDITION, FOR DETAILS OF THE CAST IRON FRAMES AND GRATES, CONCRETE TOP UNITS, GRADE ADJUSTMENT RINGS, AND INLET BOXES.
3. ALL CEMENT CONCRETE USED TO CONSTRUCT THE STORM SEWER INLETS SHALL BE CLASS AA, AND SATISFY THE REQUIREMENTS OF PENNDOT PUBLICATION 408, SECTION 704.
4. ALL REINFORCEMENT STEEL USED TO CONSTRUCT THE STORM SEWER INLETS SHALL BE ASTM–A615 GRADE 60 DEFORMED OR PLAIN STEEL BARS, AND SATISFY THE REQUIREMENTS OF PENNDOT PUBLICATION 408, SECTION 709.1 AND 709.2 (IF APPLICABLE).
5. PRE–CAST REINFORCED CONCRETE STORM SEWER INLET BOXES, CONCRETE TOP UNITS, AND GRADE ADJUSTMENT RINGS SHALL CONFORM TO THE REQUIREMENTS OF PENNDOT PUBLICATION 408, SECTION 714, AND HAVE A MINIMUM COMPRESSIVE STRENGTH OF 4,000 PSI.
6. ALL FRAMES AND GRATES SHALL BE NON–ROCKING AND MADE OF HEAVY DUTY CAST IRON, AND SATISFY THE REQUIREMENTS OF PENNDOT PUBLICATION 408, SECTION 605.2(a). ALL CASTINGS SHALL BE SET IN A FULL BED OF MORTAR.
7. ALL GRADE ADJUSTMENT RINGS SHALL BE OF PRECAST CONCRETE OR STRUCTURAL STEEL.
8. ALL STORM SEWER INLETS SHALL HAVE 4" DIAMETER, 10' LONG UNDERDRAINS. ONE UNDERDRAIN SHALL EXTEND FROM EACH PAVED (NON–CURBED) SIDE OF THE INLET BOX. INSTALLATION OF THE UNDERDRAINS SHALL BE BELOW THE AGGREGATE BASE COURSE BOTTOM ELEVATION (SEE DRAINAGE REQUIREMENTS AT INLETS DETAIL).
9. ALL INLETS SHALL BE SIZED TO ACCOMMODATE THE REQUIRED PIPE SIZE. SEAL PIPE CONNECTIONS WITH MORTAR OR WATERTIGHT RUBBER FLEXIBLE CONNECTORS.
10. ALL STORM SEWER INLETS SHALL HAVE WEEP HOLES AT AN ELEVATION WHICH PERMITS DRAINAGE OF THE PAVEMENT AGGREGATE BASE COURSE. THE DIAMETER OF THE WEEP HOLES SHOULD BE LIMITED SO AS NOT TO ALLOW THE CRUSHED STONE TO "WASH" INTO THE INLET.
11. ALL BACKFILL PLACED AROUND THE STORM SEWER INLETS SHALL BE AASHTO NO. 57 CRUSHED LIMESTONE AGGREGATE MEETING THE REQUIREMENTS OF PENNDOT PUBLICATION 408, SECTION 703. THE AGGREGATE SHALL BE PLACED IN MAXIMUM 6" THICK LOOSE LIFTS AND COMPACTED TO AT LEAST 70% OF ITS RELATIVE DENSITY.

DETAIL 808
INLET ASSEMBLY
N.T.S.

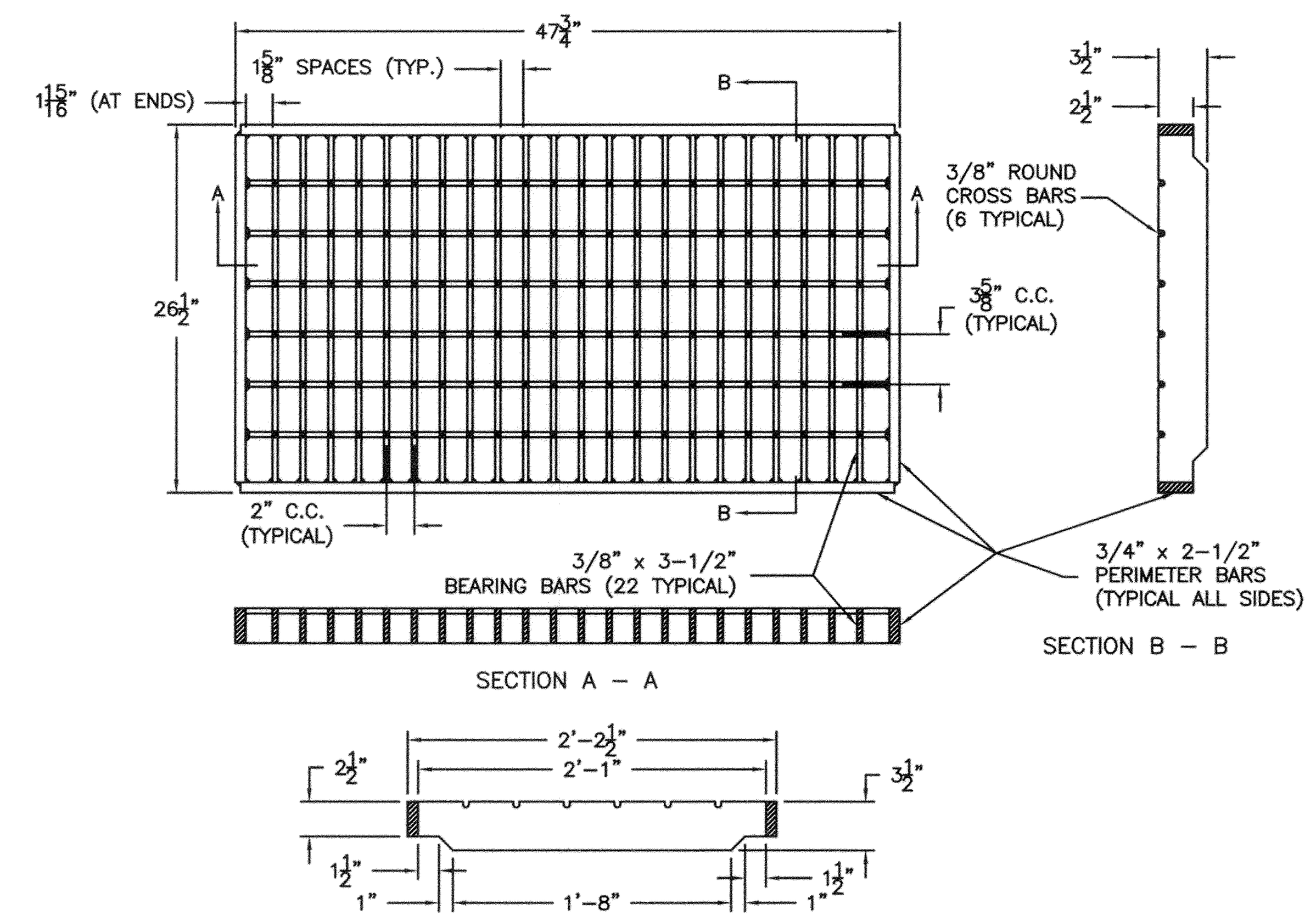

BICYCLE-SAFE STRUCTURAL STEEL GRATE

NOTES:

1. ALL WELDING SHALL BE IN CONFORMANCE WITH THE REQUIREMENTS OF PUBLICATION 408, SECTION 1105.03(m).
2. ALL BEARING BARS AND PERIMETER BARS SHALL BE ASTM A572 GRADE 50 STEEL. ALL CROSS BARS SHALL BE A36 STEEL.
3. ALL CROSS BARS SHALL BE LOCATED FLUSH ALONG THE TOP SURFACE OF THE GRATE.
4. COAT GRATES WITH AN APPROVED BITUMIOUS PAINT, IN ACCORDANCE WITH PUBLICATION 408, SECTION 605.2(d), IN THE SHOP OF FIELD PRIOR TO INSTALLATION.
5. AS AN ALTERNATE TO BITUMINOUS PAINT, GALVANIZE GRATES IN ACCORDANCE WITH PUBLICATION 408, SECTION 1105.02(s).

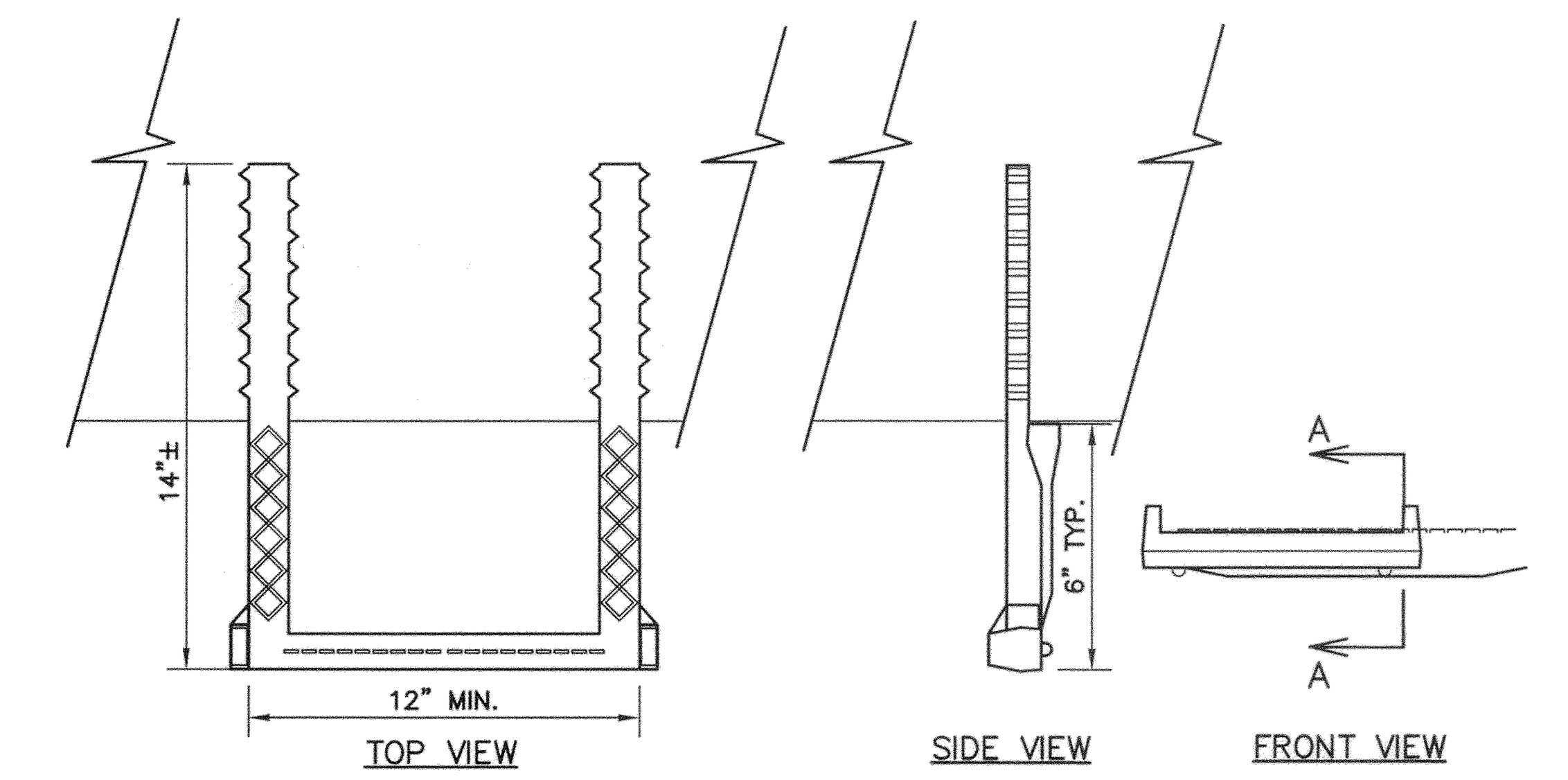

TYPE 1 CAST-IN-PLACE

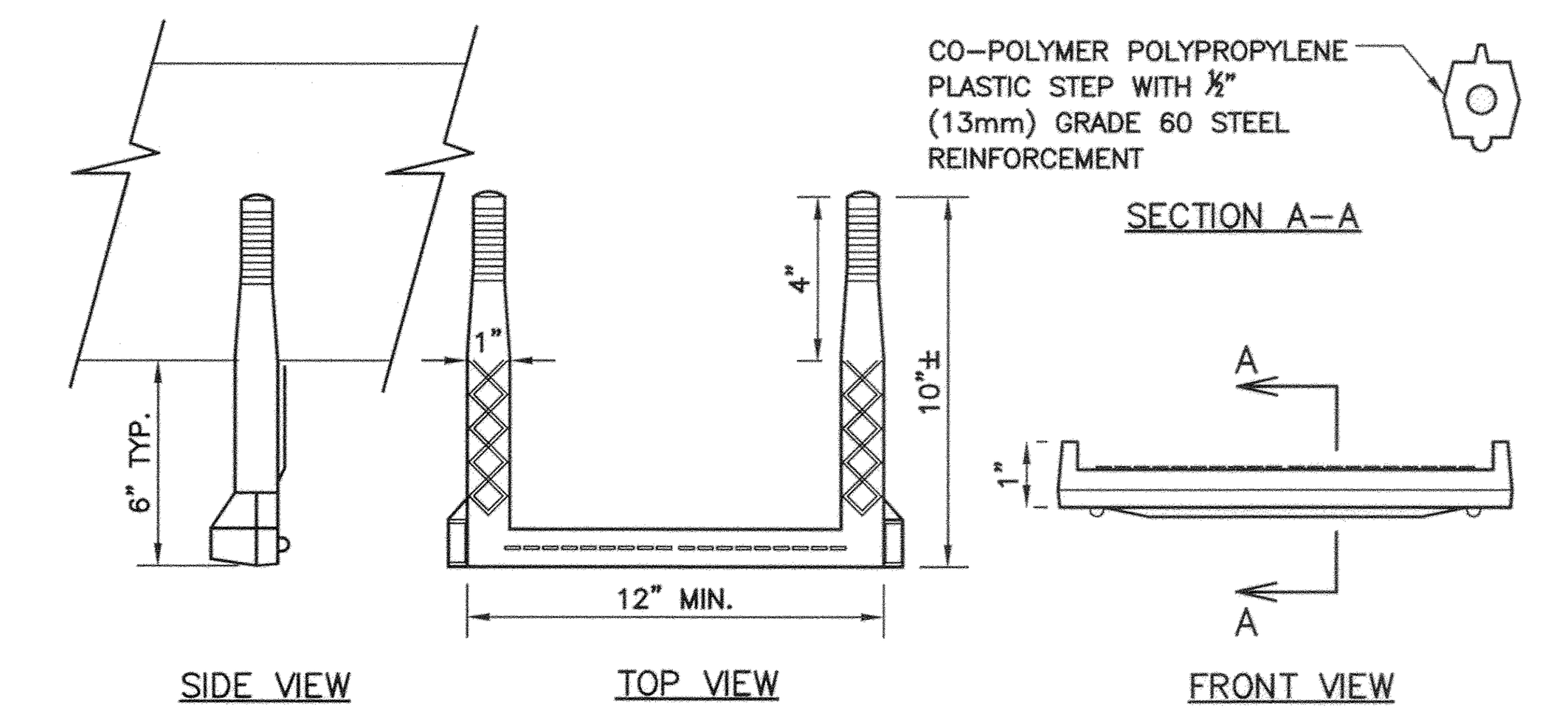

TYPE 2 PRE-DRILLED HOLE

NOTES:

1. TYPICAL STEPS, SPACING AND MATERIAL AS PER ASTM DESIGNATION C–478, AASHTO M–199.
2. PLASTIC SHALL BE A CO–POLYMER POLYPROPYLENE MEETING THE REQUIREMENTS OUTLINED IN ASTM DESIGNATION D–4101 UNDER TYPE II, GRADE 49108.
3. STEEL REINFORCING BAR SHALL BE A ½" (13mm) DEFORMED BAR, GRADE 60 AND CONFORMING TO THE REQUIREMENTS OF ASTM DESIGNATION A–615.
4. USE TYPE 1 FOR CAST–IN–PLACE VAULTS. USE TYPE 2 FOR NEW PRECAST MANHOLES OR WHEN ADDING STEPS TO EXISTING STRUCTURES.
5. ALL STEPS SHALL BE SET VERTICALLY AT 12" CENTER TO CENTER.

DETAIL 809
PLASTIC MANHOLE STEP
N.T.S.

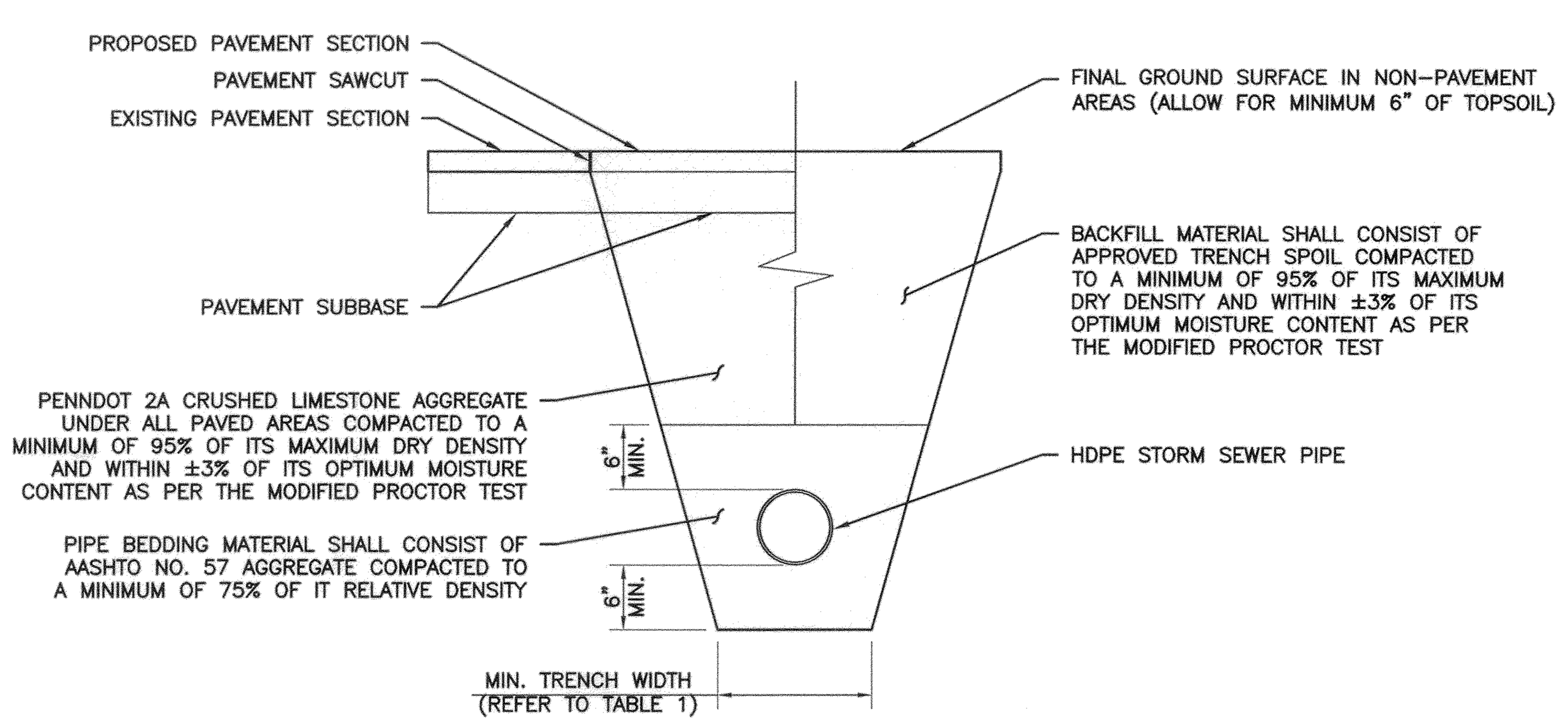

TABLE 1: MINIMUM TRENCH WIDTHS

PIPE DIAMETER (in.)	TRENCH WIDTH (in.)
4–10	28
12	30
15	34
18	39
24	48
30	56
36	64
42	72
48	80
54	88
60	96

NOTES:

1. ALL MATERIALS EXCAVATED DURING TRENCHING SHALL BE STOCKPILED A SUFFICIENT DISTANCE FROM ALL TRENCHES TO PREVENT SLIDES OR CAVE–INS. THE CONTRACTOR SHALL PROVIDE ADEQUATE TRENCH SHORING (WHERE NECESSARY) IN CONFORMANCE WITH THE LATEST OSHA REQUIREMENTS FOR CONSTRUCTION STANDARD FOR EXCAVATIONS (29 CFR PART 1926.650–.652 SUBPART P).
2. ALL BACKFILL MATERIALS SHALL BE APPROVED BY THE OWNER'S ENGINEER OR THEIR REPRESENTATIVE BEFORE BEING PLACED. BACKFILL MATERIAL SHALL BE PLACED IN MAXIMUM 8" THICK LIFTS FOR FULL–SIZE COMPACTION EQUIPMENT, 4"–6" LIFTS WITH HANDHELD EQUIPMENT.
3. AASHTO NO. 57 CRUSHED LIMESTONE AGGREGATE AND PENNDOT 2A CRUSHED LIMESTONE AGGREGATE SHALL SATISFY THE REQUIREMENTS OF PENNDOT PUBLICATION 408, SECTION 703.
4. THE MAXIMUM DRY DENSITY AND OPTIMUM MOISTURE CONTENT FOR THE BACKFILL MATERIAL AND THE PENNDOT 2A CRUSHED LIMESTONE AGGREGATE SHALL BE DETERMINED BY ASTM D1557. THE RELATIVE DENSITY OF THE AASHTO NO. 57 AGGREGATE SHALL BE DETERMINED BY MAX/MIN RELATIVE DENSITY IN ACCORDANCE WITH ASTM D4253 AND ASTM D4254.
5. THE CONTRACTOR SHALL VERIFY THAT THE MINIMUM SPECIFIED PIPE COVER IS PROVIDED BETWEEN THE FINAL GROUND SURFACE AND TOP OF PIPE BEFORE LAYING PIPE. PROVIDE A MINIMUM 2 FEET OF COVER ABOVE ALL PIPES DURING CONSTRUCTION.
6. INCREASE TRENCH WIDTH AS NECESSARY TO ALLOW FOR PROPER COMPACTION OF BEDDING/BACKFILL.
7. RECOMMENDED MANUFACTURER: ADVANCED DRAINAGE SYSTEMS, INC. (ADS), OR APPROVED EQUAL.

DETAIL 810
TYPICAL HDPE STORM SEWER TRENCH
N.T.S.

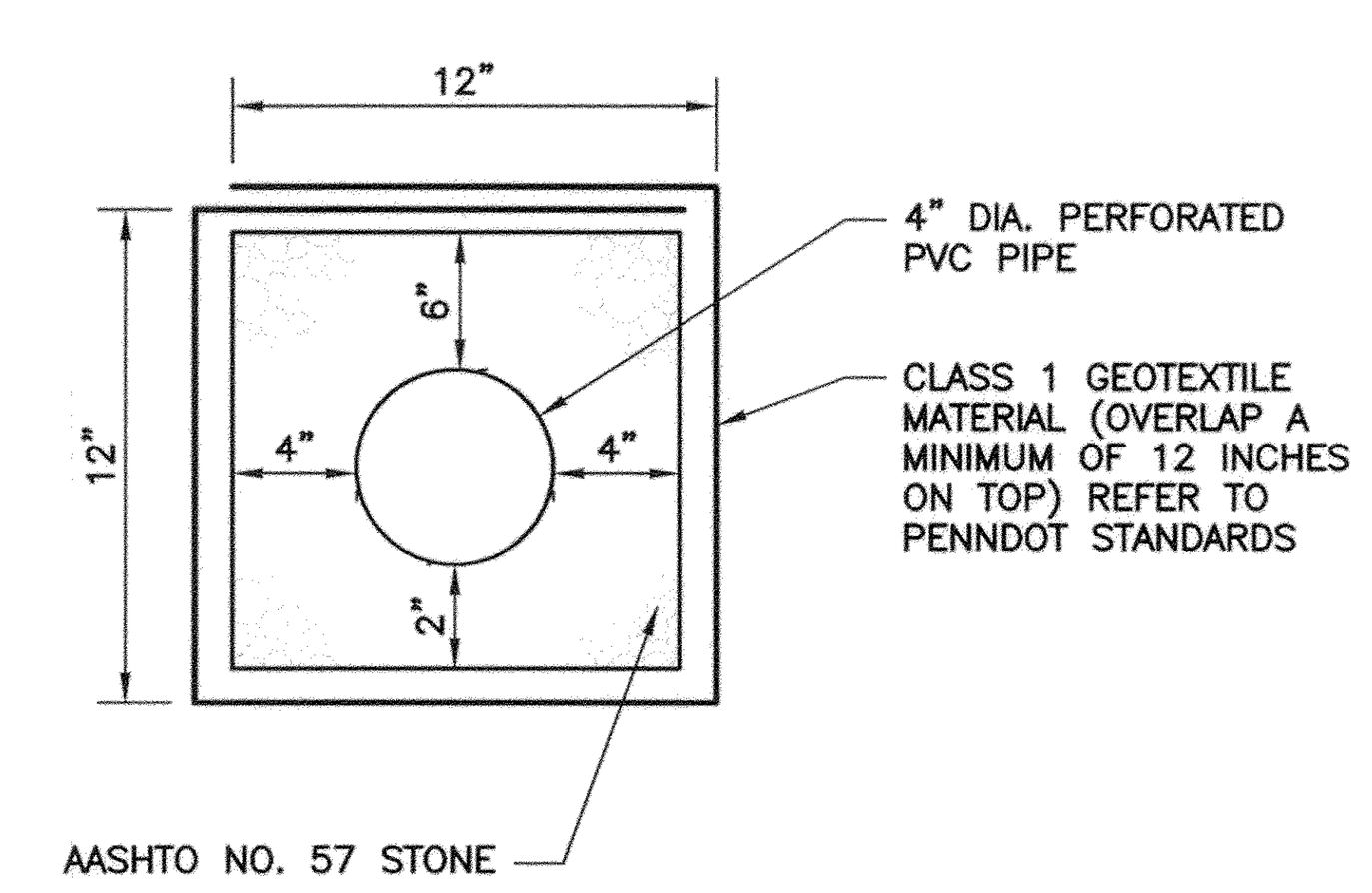

PAVEMENT UNDERDRAIN DETAIL

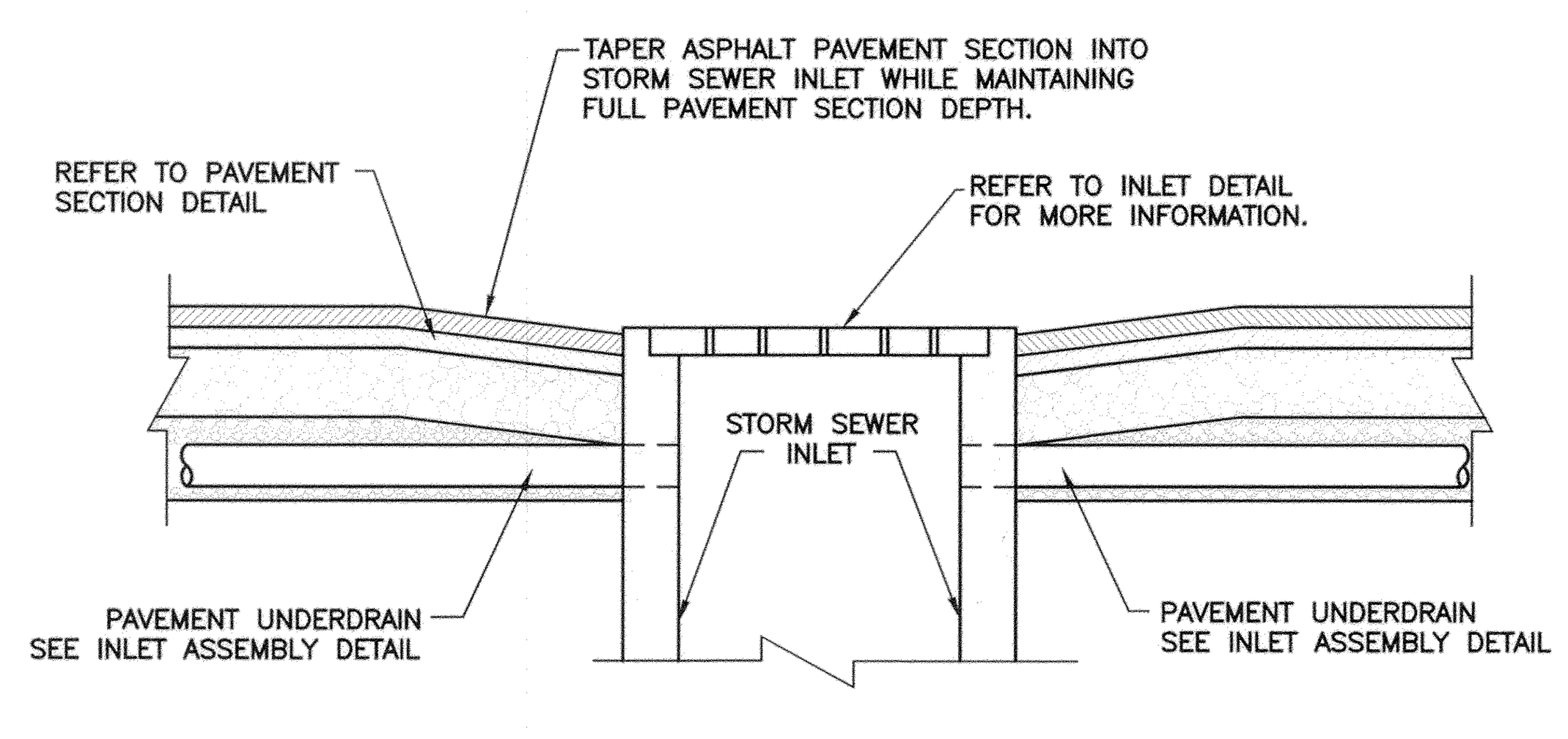

SECTION

NOTES:

1. UNDERDRAINS SHALL EXTEND OUT A MINIMUM OF 10' FROM FOUR SIDES OF TYPE M STORM SEWER INLETS.
2. THE AASHTO NO. 57 AGGREGATE SHALL MEET THE REQUIREMENTS OF PENNDOT PUBLICATION 408, SECTION 703.
3. THE CLASS 1 DRAINAGE GEOTEXTILE SHALL MEET THE REQUIREMENTS OF PENNDOT PUBLICATION 408, SECTION 735, AND SHALL BE INSTALLED IN ACCORDANCE WITH PENNDOT PUBLICATION 408, SECTION 212.

DETAIL 811
DRAINAGE REQUIREMENTS AT INLETS
N.T.S.

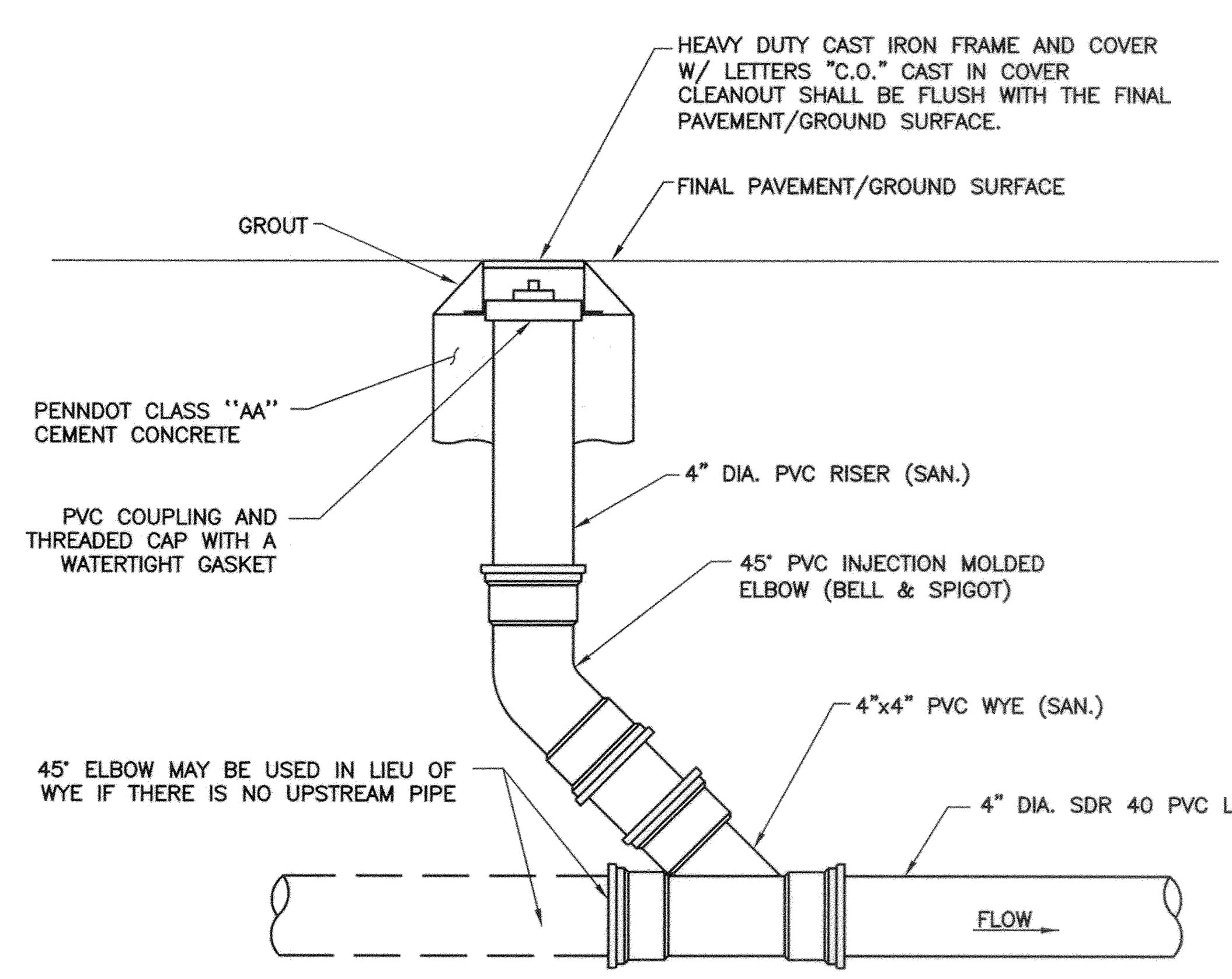

NOTES:

1. ALL PVC PIPE AND FITTINGS SHALL BE SDR–35 WITH RUBBER GASKETED JOINTS.
2. THE CLASS "AA" CEMENT CONCRETE SHALL SATISFY THE REQUIREMENTS OF PENNDOT PUBLICATION 408, SECTION 704.

DETAIL 812
TYPICAL CLEANOUT DETAIL
N.T.S.

PLAN BOOK	PAGE
365	26

*HAND SIGNATURE ON FILE

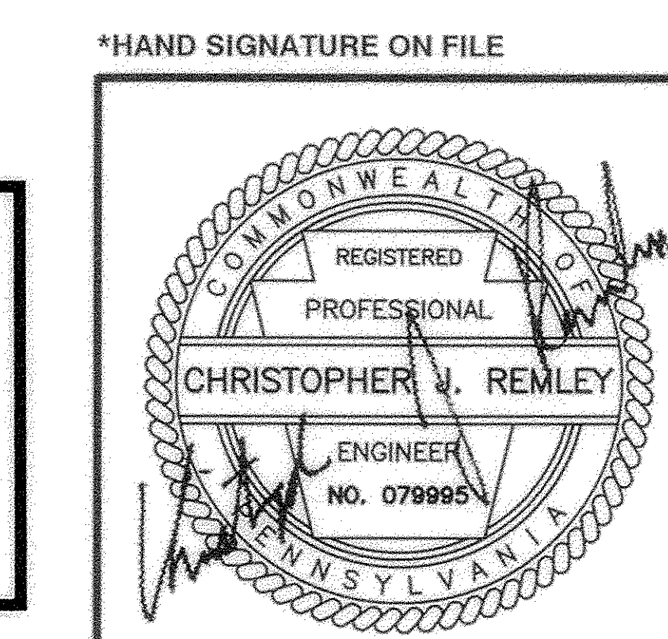

SUBMITTAL & REVISION RECORD

NO	DATE	DESCRIPTION
1	02/15/2017	LAND DEVELOPMENT SUBMISSION 01 TO MUDDY CREEK TOWNSHIP
2	02/21/2017	NPDES SUBMISSION 01 TO BUTLER COUNTY CONSERVATION DISTRICT
3	03/09/2017	RESPONSE TO COMMENTS FROM ENGINEER DATED 03/03/2017
4	03/29/2017	HART PRELIMINARY CIVIL SET SUBMISSION
5	03/30/2017	RESPONSE TO COMMENTS SUBMISSION TO BCCD DATED 3/14/2017
6	04/03/2017	FINAL LAND DEVELOPMENT PLAN SET SUBMISSION TO MUDDY CREEK TOWNSHIP
7	05/10/2017	RESPONSE TO COMMENTS FROM PTV DATED 05/01/2017 & FINAL SUBMISSION TO BCCD FOR NPDES PERMIT
8	07/13/2017	FINAL LAND DEVELOPMENT PLAN SET SUBMISSION TO MUDDY CREEK TOWNSHIP

Civil & Environmental Consultants, Inc.
333 Baldwin Road · Pittsburgh, PA 15205
412-429-2324 · 800-365-2324
www.cecinc.com

PTV XX, LLC
PORTERSVILLE DOLLAR GENERAL STORE
MUDDY CREEK TOWNSHIP
BUTLER COUNTY, PENNSYLVANIA

SITE CONSTRUCTION DETAILS

DATE:	FEBRUARY 15, 2017	DRAWN BY:	EJB/DMO
DWG SCALE:	AS SHOWN	CHECKED BY:	*CJR
PROJECT NO:	163-826		
APPROVED BY:	*GPQ		

DRAWING NO.: C801

SHEET 14 OF 21

P:\2016\163-826\-CADD\Dwg\CV01\163826-CV01-C800.dwg{C801} LS:(5/10/2017 - ebrice) - LP: 7/17/2017 4:06 PM

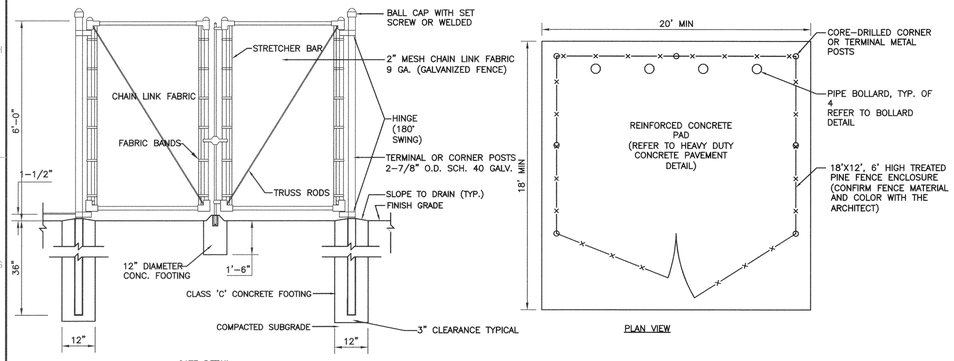

GATE DETAIL

PLAN VIEW

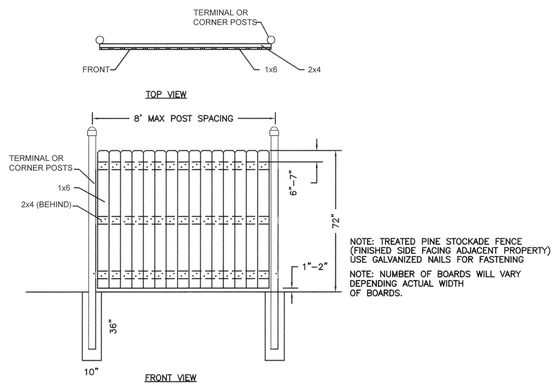

FRONT VIEW

FENCE DETAIL

DETAIL 813
TRASH ENCLOSURE
N.T.S.

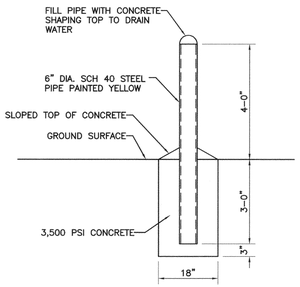

DETAIL 814
BOLLARD
N.T.S.

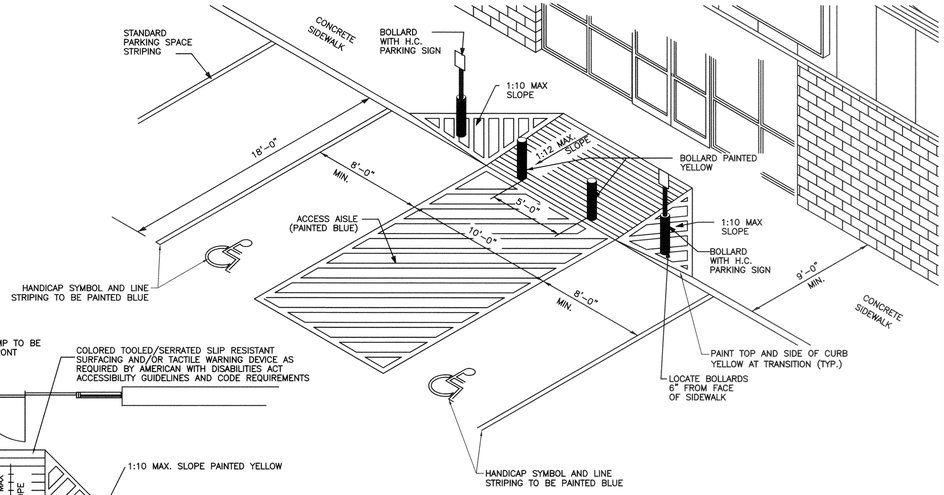

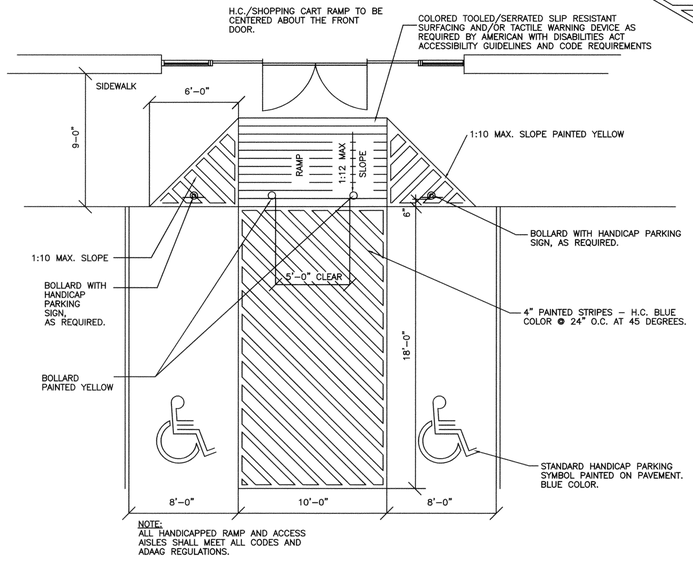

NOTE:
ALL HANDICAPPED RAMP AND ACCESS AISLES SHALL MEET ALL CODES AND ADAAG REGULATIONS.

DETAIL 815
HANDICAP/ACCESSIBLE RAMP DETAIL
N.T.S.

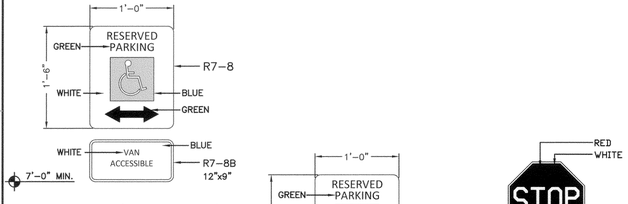

LEFT SIDE SIGN (FACING BUILDING)

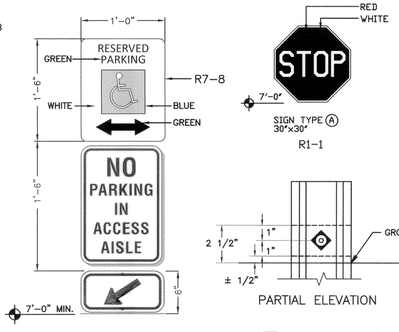

RIGHT SIDE SIGN (FACING BUILDING)

TRAFFIC SIGN POST

PARTIAL ELEVATION

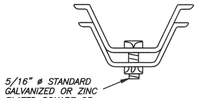

PLAN VIEW

BREAK-AWAY CHANNEL POST

DETAIL 816
TRAFFIC SIGNS
N.T.S.

NOTES:
1. ALL TRAFFIC CONTROL SIGNS, SIGN POSTS, AND HARDWARE SHALL SATISFY THE REQUIREMENTS SET FORTH IN PENNDOT PUBLICATIONS 111M AND 408 AND MUTCD STANDARDS.
2. FOR POST MOUNTING, USE NON-CORROSIVE 3/8" MACHINE BOLTS W/ WASHERS, 2 PER SIGN.
3. ALL ACCESSIBLE PARKING SIGNAGE SHALL BE INSTALLED WITH THE BOTTOM EDGE OF THE LOWEST SIGN AT LEAST 84" ABOVE FINISHED GRADE.

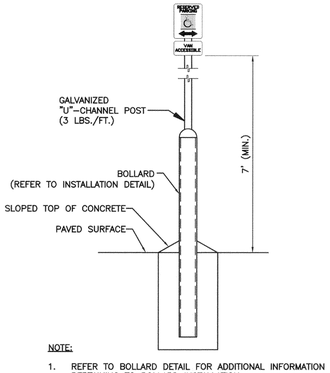

HANDICAP PARKING SIGN DETAIL

NOTE:
1. REFER TO BOLLARD DETAIL FOR ADDITIONAL INFORMATION PERTAINING TO BOLLARD INSTALLATION.

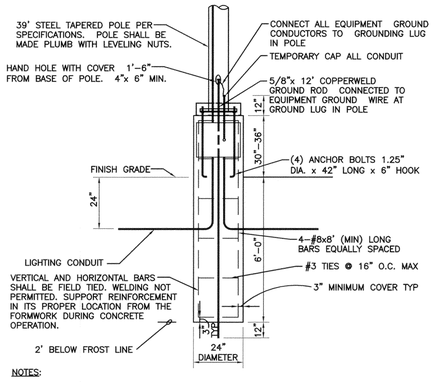

NOTES:
1. ALL LIGHT POLE BASE FOUNDATIONS SHALL BE CAST-IN-PLACE CONCRETE, 3500 PSI MIN. 28 DAY COMPRESSIVE STRENGTH CONCRETE WITH GRADE 60 REINFORCING STEEL.
2. IF WATER IS PRESENT IN EXCAVATED HOLE, REMOVE BEFORE POURING CONCRETE.
3. FOUNDATION EXCAVATION SHALL BE BY 24" AUGER IN UNDISTURBED OR PROPERLY COMPACTED FILL PER SPECIFICATIONS.
4. FOUNDATION SHALL HAVE A MINIMUM ALLOWABLE END BEARING OF 2000 PSF.
5. FOUNDATION HAS BEEN DESIGNED FOR A COHESIVE SOIL BASED ON A MINIMUM COHESIVE VALUE OF 1000 PSF.
6. FOUNDATION HAS BEEN DESIGNED FOR A GRANULAR SOIL BASED ON A MINIMUM LATERAL SOIL PRESSURE OF 1000 PSF, UTILIZING AASHTO FIGURE 1.8.2C(4) OF "EMBEDMENT OF POSTS WITH OVERTURNING LOADS".

DETAIL 817
SITE LIGHTING POLE BASE
N.T.S.

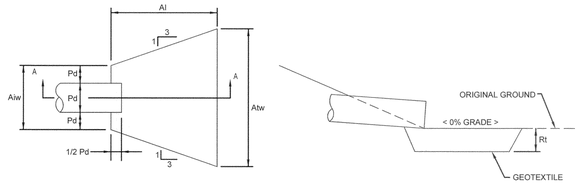

PLAN VIEW

SECTION A - A

APRON NO.	OUTLET NO.	PIPE DIA Pd (IN)	RIPRAP SIZE (R-__)	RIPRAP THICK Rt (IN)	APRON LENGTH Al (FT)	APRON INITIAL WIDTH Aiw (FT)	APRON TERMINAL WIDTH Atw (FT)
1	EW-1	12	R-4	8	15	6	12
2	EW-2	15	R-3	6	6	4	6

NOTES:
1. ALL APRONS SHALL BE CONSTRUCTED TO THE DIMENSIONS SHOWN. TERMINAL WIDTHS SHALL BE ADJUSTED AS NECESSARY TO MATCH RECEIVING CHANNELS.
2. ALL APRONS SHALL BE INSPECTED AT LEAST WEEKLY AND AFTER EACH RUNOFF EVENT. DISPLACED RIPRAP WITHIN THE APRON SHALL BE REPLACED IMMEDIATELY.
3. EXTEND RIPRAP ON BACK SIDE OF APRON AT LEAST ½ DEPTH OF PIPE ON BOTH SIDES TO PREVENT SCOUR AROUND THE PIPE.

DETAIL 818
RIPRAP APRON OUTFALL
N.T.S.

PLAN BOOK	PAGE
365	27

*HAND SIGNATURE ON FILE



SUBMITTAL & REVISION RECORD

NO	DATE	DESCRIPTION
1	02/17/2017	LAND DEVELOPMENT SUBMISSION TO MUDDY CREEK TOWNSHIP
2	02/23/2017	NPDES SUBMISSION TO BUTLER COUNTY CONSERVATION DISTRICT
3	03/08/2017	RESPONSE TO COMMENTS FROM ENGINEER DATED 03/03/2017
4	03/28/2017	HART PRELIMINARY CIVIL SET SUBMISSION
5	05/30/2017	RESPONSE TO COMMENTS SUBMISSION TO BCCD DATED 5/1/2017
6	04/05/2017	FINAL LAND DEVELOPMENT PLAN SET SUBMISSION TO MUDDY CREEK TOWNSHIP
7	06/15/2017	RESPONSE TO COMMENTS FROM ITV DATED 05/31/2017 & FINAL SUBMISSION TO BCCD FOR NPDES PERMIT
8	07/13/2017	FINAL LAND DEVELOPMENT PLAN SET SUBMISSION TO MUDDY CREEK TOWNSHIP

Civil & Environmental Consultants, Inc.
333 Baldwin Road · Pittsburgh, PA 15205
412-429-2324 · 800-365-2324
www.ceciinc.com

PTV XX, LLC
PORTERSVILLE DOLLAR GENERAL STORE
MUDDY CREEK TOWNSHIP
BUTLER COUNTY, PENNSYLVANIA

SITE CONSTRUCTION DETAILS

DATE: FEBRUARY 15, 2017 | DRAWN BY: EJB | DMO
DWG SCALE: AS SHOWN | CHECKED BY: *CJR
PROJECT NO: 163-826
APPROVED BY: *GPQ

DRAWING NO.: C802

SHEET 15 OF 21

P:\2016\163-826_CAD\Dwg\CNI11658826-CVR1-C802.dwg[C802] LS:5/10/2017 - 4:07 PM LP: 7/17/2017 4:07 PM

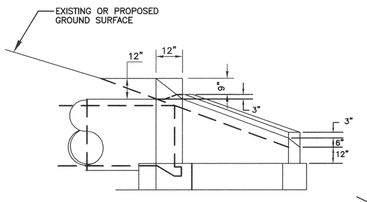

SIDE VIEW

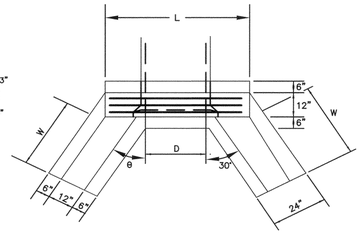

TOP VIEW

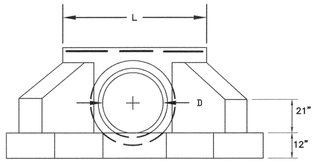

END VIEW

D	L	W	θ
15"	4.0'	1.2'	30°
18"	4.0'	1.2'	30°
24"	4.9'	2.3'	30°
30"	5.2'	3.5'	30°
36"	5.8'	4.6'	30°

NOTES:

1. ALL CONCRETE AND REINFORCING PER PENNDOT PUBLICATION 408.
2. REFER TO PENNDOT BUREAU OF HIGHWAY DESIGN STANDARDS FOR ROADWAY CONSTRUCTION, RC-31.

DETAIL 819
ENDWALL/HEADWALL
N.T.S.

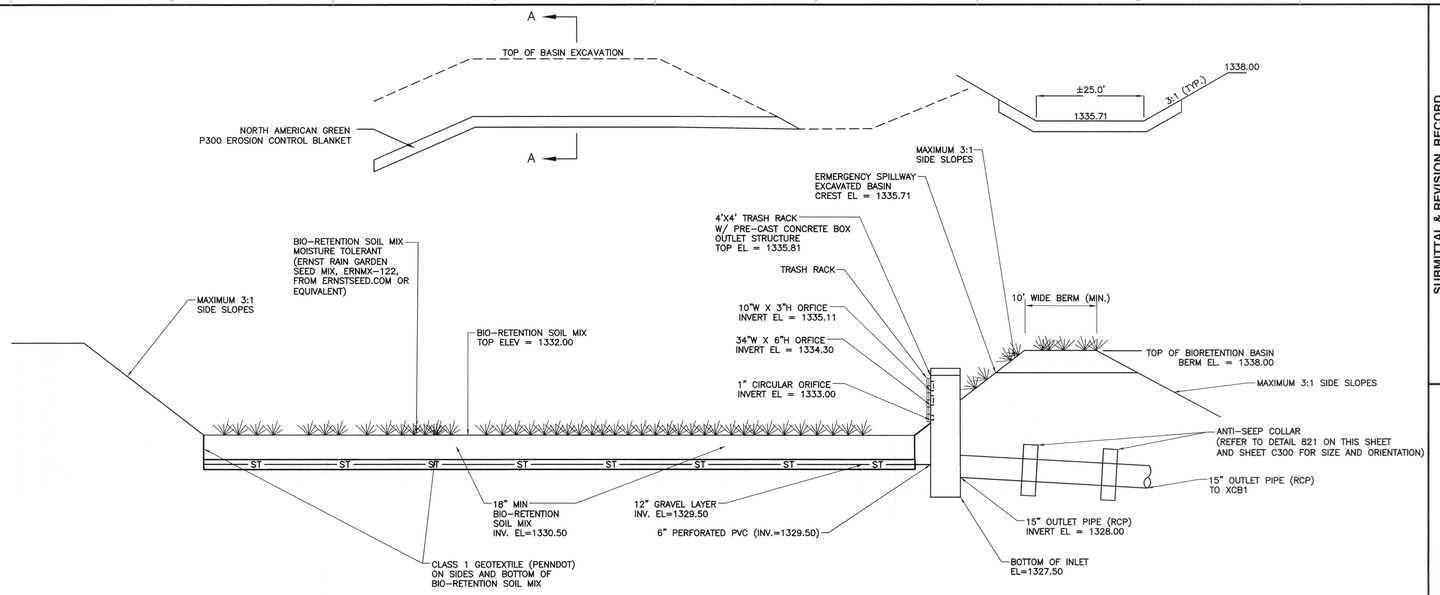

GENERAL NOTES

1. IN THE EVENT THAT SEDIMENT IS INTRODUCED INTO THE BMP DURING OR IMMEDIATELY FOLLOWING EXCAVATION, THIS MATERIAL SHALL BE REMOVED FROM THE BMP PRIOR TO CONTINUING CONSTRUCTION.
2. GRADING OF BIO-RETENTION DEVICES SHALL BE ACCOMPLISHED USING LOW-COMPACTION EARTH-MOVING EQUIPMENT TO PREVENT COMPACTION OF UNDERLYING SOILS.
3. ALL SUBGRADE MATERIALS BELOW THE SPECIFIED BIO-RETENTION DEPTH SHALL BE BACKFILL MATERIAL, PLACED AS NOTED.

BIO-RETENTION SOIL MIX NOTES

1. PLANTING SOIL SHOULD BE A LOAM SOIL AMENDED WITH A COMPOSTED ORGANIC MATERIAL. THE MIXTURE SHOULD BE COMPOSED OF 70-80% TOPSOIL BASE WITH 20-30% ORGANIC COMPOST.
2. VOLUME STORAGE SOILS SHOULD HAVE A pH OF 5.5-6.5, CLAY CONTENT OF LESS THAN 10%, BE FREE OF TOXIC SUBSTANCES AND UNWANTED PLANT MATERIAL, AND CONTAIN 5-10% ORGANIC MATERIAL
3. REFER TO SECTION 6.4.5 OF THE "PENNSYLVANIA STORMWATER BEST MANAGEMENT PRACTICES MANUAL" FOR ADDITIONAL INFORMATION REGARDING THE REQUIRED SOIL MIX AND GRAVEL.

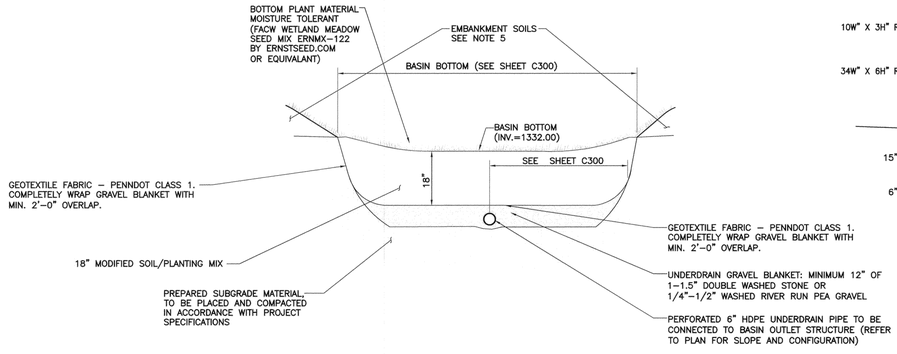

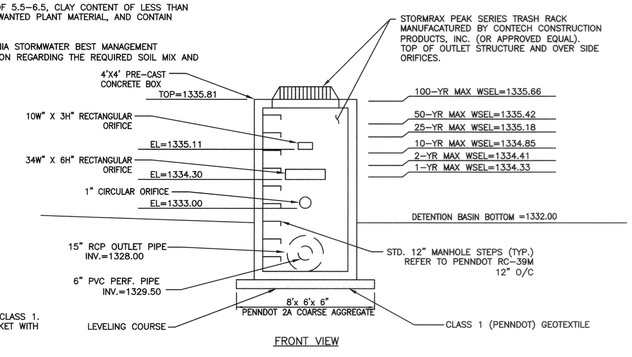

FRONT VIEW

DETAIL 820
BIO-RETENTION BASIN
N.T.S.

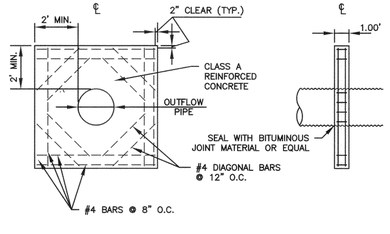

DETAIL 821
CONCRETE ANTI-SEEPAGE COLLAR
N.T.S.

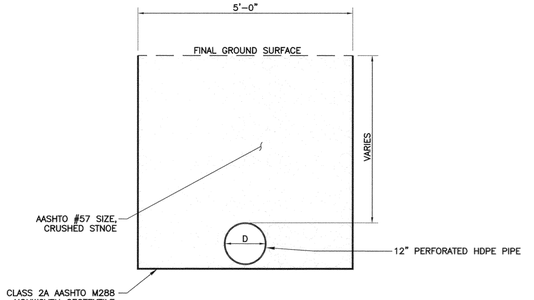

DETAIL 822
GRAVEL PIT TRENCH
N.T.S.

PLAN BOOK	PAGE
365	28

*HAND SIGNATURE ON FILE

COMMONWEALTH OF PENNSYLVANIA
REGISTERED PROFESSIONAL
CHRISTOPHER J. REMLEY
ENGINEER
NO. 079992

SUBMITTAL & REVISION RECORD

NO	DATE	DESCRIPTION
1	02/15/2017	LAND DEVELOPMENT SUBMISSION TO MUDDY CREEK TOWNSHIP
2	02/23/2017	NPDES SUBMISSION #1 TO BUTLER COUNTY CONSERVATION DISTRICT
3	03/08/2017	RESPONSE TO COMMENTS FROM ENGINEER DATED 03/03/2017
4	03/28/2017	DRAFT PRELIMINARY CIVIL SET SUBMISSION
5	03/30/2017	RESPONSE TO COMMENTS SUBMISSION TO BCCD DATED 3/14/2017
6	04/03/2017	FINAL LAND DEVELOPMENT PLAN SET SUBMISSION TO MUDDY CREEK TOWNSHIP
7	04/10/2017	RESPONSE TO COMMENTS FROM PTI DATED 03/31/2017 & FINAL SUBMISSION TO BCCD FOR NPDES PERMIT
8	07/13/2017	FINAL LAND DEVELOPMENT PLAN SET SUBMISSION TO MUDDY CREEK TOWNSHIP

Civil & Environmental Consultants, Inc.
333 Baldwin Road · Pittsburgh, PA 15205
412-429-2324 · 800-365-2324
www.cecinc.com

PTV XX, LLC
PORTERSVILLE DOLLAR GENERAL STORE
MUDDY CREEK TOWNSHIP
BUTLER COUNTY, PENNSYLVANIA

SITE CONSTRUCTION DETAILS

DATE: FEBRUARY 15, 2017 | DRAWN BY: E.J.B | DMO
DWG SCALE: AS SHOWN | CHECKED BY: *C.J.R
PROJECT NO: 163-826
APPROVED BY: *C.J.R

DRAWING NO.: C803
SHEET 16 OF 21

P:\2016\163-826_CAD\Dwg\C803\163826-C803-dwg[C803] LS(8.5x11) - Model - LP: 7/17/2017 4:07 PM

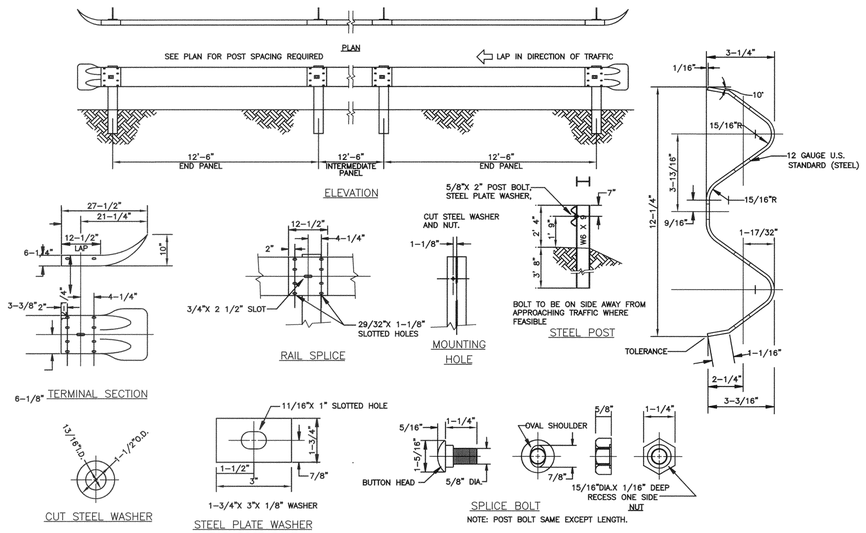

NOTES:

1. ALL GUIDE RAIL ELEMENTS, FASTENERS, AND TERMINAL SELECTIONS SHALL MEET THE REQUIREMENTS OF AASHTO M 180.
2. GUIDE RAIL END TREATMENTS SHALL BE INSTALLED IN ACCORDANCE WITH PENNDOT ROADWAY CONSTRUCTION STANDARDS 54M SHEET 2 OF 7.

DETAIL 823
STEEL GUIDERAIL
N.T.S

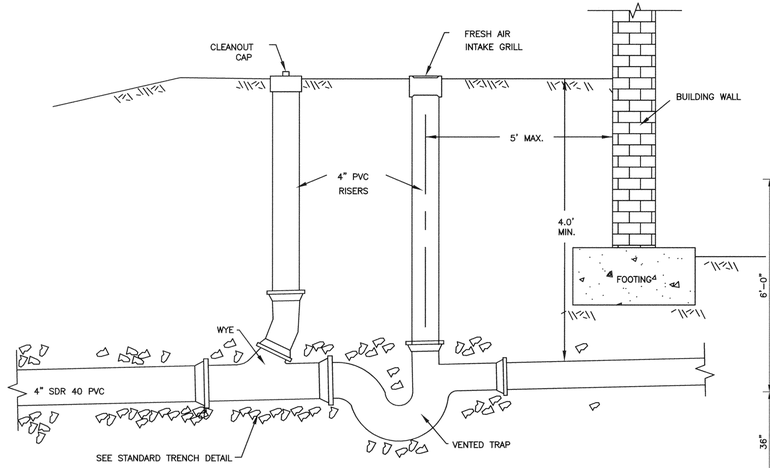

NOTES:

1. PROVIDE CLEANOUTS AT LOCATIONS SHOWN ON PLAN
2. CLEANOUTS ON 4" DIA. LATERALS MUST BE PLACED AT 100' MAX. INTERVALS
3. FINAL DESIGN AS APPROVED BY THE CENTERVILLE BOROUGH SEWER AUTHORITY

DETAIL 824
DOUBLE CLEANOUT WITH VENT
N.T.S.

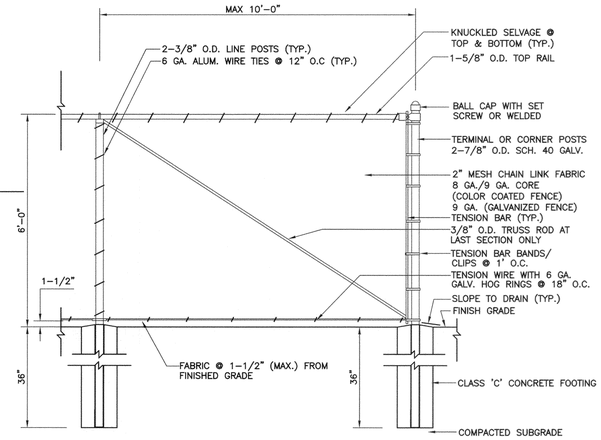

NOTES:

1. FOOTING WIDTH TO BE (4)X POST WIDTH. MINIMUM DEPTH TO BE 36".
2. FENCE BY MASTER HALCO OR APPROVED EQUAL.

DETAIL 825
CHAINLINK FENCE DETAIL
N.T.S.

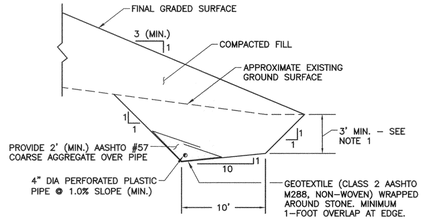

NOTES:

1. EXCAVATE TO A SUITABLE MATERIAL DEPTH AS DETERMINED BY THE GEOTECHNICAL ENGINEER OF RECORD OR THEIR FIELD REPRESENTATIVE.
2. SLOPE TO DRAIN AND OUTLET FILL FOUNDATION KEY DRAIN BEYOND THE LIMITS OF NEW FILL AT LOCATIONS SHOWN ON PLAN USING SUBSURFACE DRAINS.
3. EXISTING SLOPING GROUND SURFACES SHOULD BE CONTINUOUSLY BENCH TO RECEIVE NEW FILL MATERIALS. BENCHES SHOULD BE A MAXIMUM OF 3 FEET IN HEIGHT AND A MINIMUM OF 6 FEET IN WIDTH. THE INITIAL LIFT OF NEW FILL SOILS PLACED OVER BENCHED SUBGRADES SOILS AND OVER SUBSEQUENT LIFTS SHOULD BE BLENDED WITH THE SUBGRADE SOILS USING SHEEPSFOOT ROLLER EQUIPMENT.
4. REFER TO GEOTECHNICAL ENGINEERING SERVICES REPORT, PREPARED BY PROFESSIONAL SERVICES INDUSTRIES, INC. (PSI), DATED JANUARY 3, 2017 FOR STRUCTURAL FILL MATERIAL AND PLACEMENT REQUIREMENTS.

DETAIL 826
FILL FOUNDATION KEY
N.T.S.

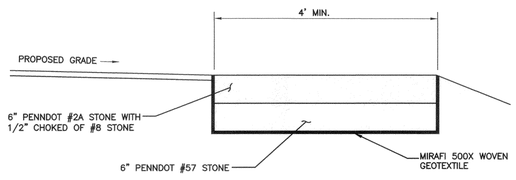

DETAIL 827
PARKING LOT GRAVEL STRIP
N.T.S.

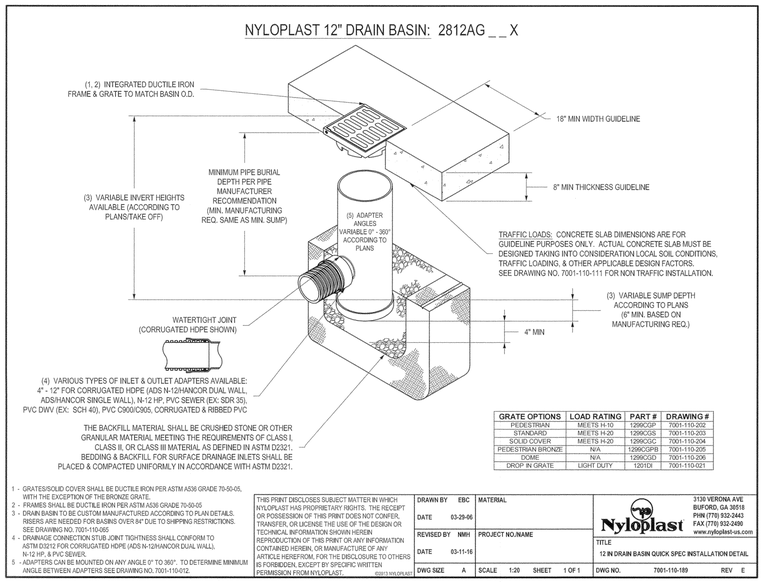

GRATE OPTIONS	LOAD RATING	PART #	DRAWING #
PEDESTRIAN	MEETS H-10	1299CGP	7001-110-202
STANDARD	MEETS H-20	1299CGS	7001-110-203
SOLID COVER	MEETS H-20	1299CGC	7001-110-204
PEDESTRIAN BRONZE	N/A	1299CGPB	7001-110-205
DOME	N/A	1299CGD	7001-110-206
DROP IN GRATE	LIGHT DUTY	1201DI	7001-110-021

1 - GRATES/SOLID COVER SHALL BE DUCTILE IRON PER ASTM A536 GRADE 70-50-05, WITH THE EXCEPTION OF THE BRONZE GRATE.
2 - FRAMES SHALL BE DUCTILE IRON PER ASTM A536 GRADE 70-50-05
3 - DRAIN BASIN TO BE CUSTOM MANUFACTURED ACCORDING TO PLAN DETAILS. RISERS ARE NEEDED FOR BASINS OVER 8ft DUE TO SHIPPING RESTRICTIONS. SEE DRAWING NO. 7001-110-065
4 - DRAINAGE CONNECTION STUB JOINT TIGHTNESS SHALL CONFORM TO ASTM D3212 FOR CORRUGATED HDPE (ADS N-12/HANCOR DUAL WALL), N-12 HP, & PVC SEWER.
5 - ADAPTERS CAN BE MOUNTED ON ANY ANGLE 0° TO 360°. TO DETERMINE MINIMUM ANGLE BETWEEN ADAPTERS SEE DRAWING NO. 7001-110-012.

THIS PRINT DISCLOSES SUBJECT MATTER IN WHICH NYLOPLAST HAS PROPRIETARY RIGHTS. THE RECEIPT OR POSSESSION OF THIS PRINT DOES NOT CONFER, TRANSFER, OR LICENSE THE USE OF THE DESIGN OR TECHNICAL INFORMATION SHOWN HEREIN. REPRODUCTION OF THIS PRINT OR ANY INFORMATION CONTAINED HEREIN, OR MANUFACTURE OF ANY ARTICLE HEREFROM, FOR THE DISCLOSURE TO OTHERS IS FORBIDDEN, EXCEPT BY SPECIFIC WRITTEN PERMISSION FROM NYLOPLAST. ©2013 NYLOPLAST

DRAWN BY	EBC	MATERIAL	
DATE	03-29-06		
REVISED BY	NMH	PROJECT NO./NAME	
DATE	03-11-16		
DWG SIZE	A	SCALE 1:20	SHEET 1 OF 1

Nyloplast
3128 VERONA AVE
BUFORD, GA 30518
PHN (770) 932-2443
FAX (770) 932-2499
www.nyloplast-us.com

TITLE
12 IN DRAIN BASIN QUICK SPEC INSTALLATION DETAIL

DWG NO. 7001-110-189 REV E

DETAIL 828
NYLOPLAST DRAIN BASIN
N.T.S.

PLAN BOOK	PAGE
365	29

*HAND SIGNATURE ON FILE

COMMONWEALTH OF PENNSYLVANIA
REGISTERED PROFESSIONAL
CHRISTOPHER J. REMLEY
ENGINEER NO. 079990

SUBMITTAL & REVISION RECORD

NO	DATE	DESCRIPTION
1	02/15/2017	LAND DEVELOPMENT SUBMISSION #1 TO MUDDY CREEK TOWNSHIP
2	02/23/2017	NPDES SUBMISSION #1 TO BUTLER COUNTY CONSERVATION DISTRICT
3	03/06/2017	RESPONSE TO COMMENTS FROM ENGINEER DATED 03/03/2017
4	03/30/2017	HART PRELIMINARY CIVIL SET SUBMISSION
5	03/30/2017	RESPONSE TO COMMENTS SUBMISSION TO BCCD DATED 3/14/2017
6	04/20/2017	FINAL LAND DEVELOPMENT PLAN SET SUBMISSION TO MUDDY CREEK TOWNSHIP
7	06/15/2017	RESPONSE TO COMMENTS FROM PTI DATED 05/31/2017 & FINAL SUBMISSION TO BCCD FOR NPDES PERMIT
8	07/13/2017	FINAL LAND DEVELOPMENT PLAN SET SUBMISSION TO MUDDY CREEK TOWNSHIP

Civil & Environmental Consultants, Inc.
333 Baldwin Road · Pittsburgh, PA 15205
412-429-2324 · 800-365-2324
www.cecinc.com

PTV XX, LLC
PORTERSVILLE DOLLAR GENERAL STORE
MUDDY CREEK TOWNSHIP
BUTLER COUNTY, PENNSYLVANIA

SITE CONSTRUCTION DETAILS

DATE:	FEBRUARY 15, 2017
DRAWN BY:	EJB DMO
DWG SCALE:	AS SHOWN
CHECKED BY:	*CJR
PROJECT NO.:	163-826
APPROVED BY:	*GPQ

DRAWING NO.:
C804
SHEET 17 OF 21

P:\2016\163-826\1-CAD\1Dwg\C804.dwg, 7/17/2017 4:07 PM, LP, 7/17/2017 4:07 PM

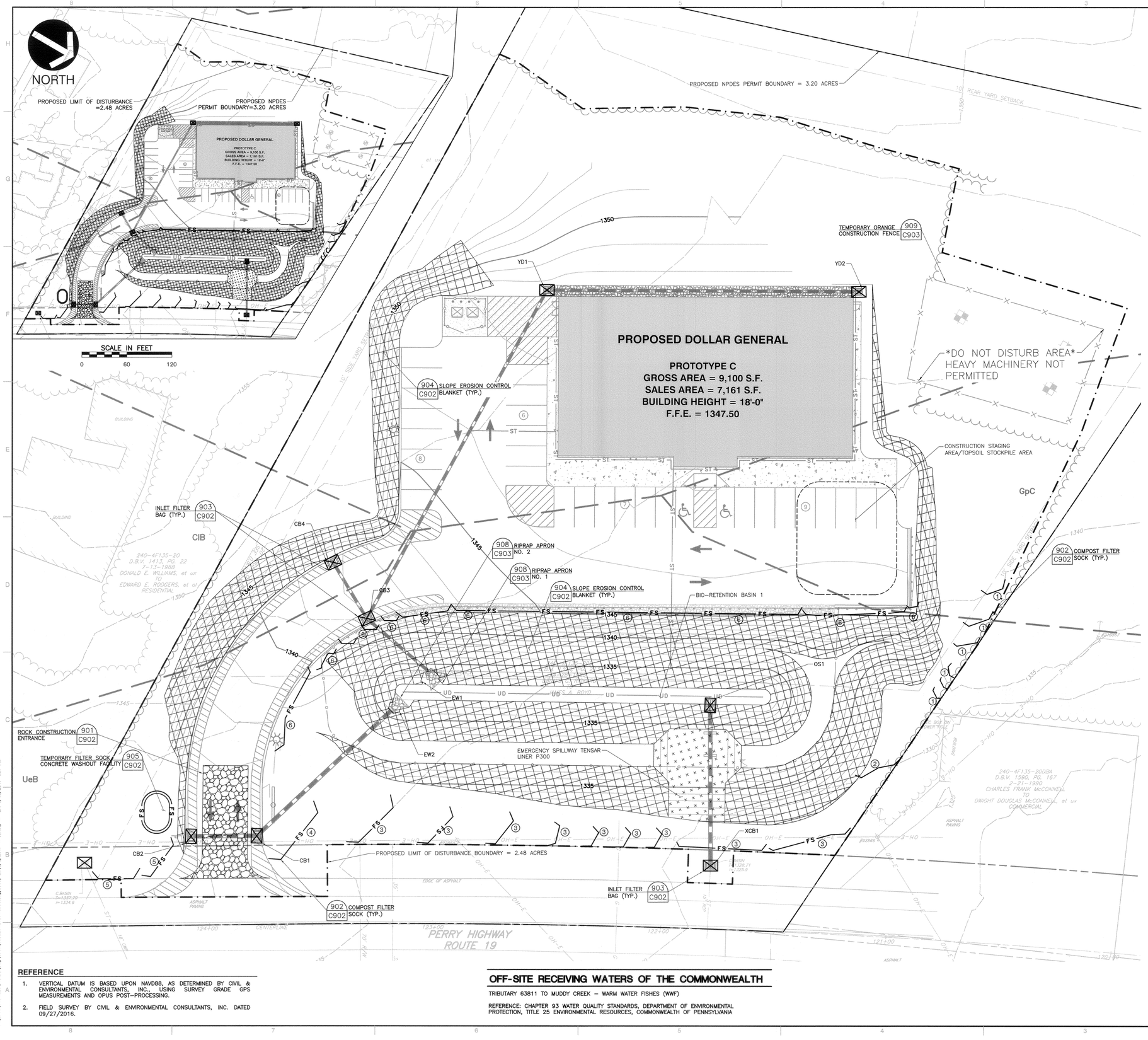

LEGEND

- EXISTING SUBJECT PROPERTY LINE
- EXISTING ADJACENT PROPERTY LINE
- EXISTING RIGHT-OF-WAY
- EXISTING SETBACK LINE
- EXISTING PROPERTY EASEMENT
- EXISTING INDEX CONTOUR
- EXISTING INTERMEDIATE CONTOUR
- EXISTING UNPAVED DRIVEWAY
- EXISTING PAVED ROAD
- EXISTING TREELINE
- EXISTING BUILDING
- OH-E EXISTING OVERHEAD ELECTRICAL LINE
- G EXISTING GAS LINE
- ST EXISTING STORM SEWER LINE
- EXISTING UTILITY POLE
- EXISTING STORM INLET
- PROPOSED BUILDING
- PROPOSED CONCRETE SIDEWALK
- PROPOSED HEAVY DUTY CONCRETE
- PROPOSED EDGE OF PAVEMENT
- PROPOSED ASPHALT WEDGE CURB
- PROPOSED CHAIN LINK FENCE
- PROPOSED TIMBER GUIDERAIL
- PROPOSED PYLON SIGN
- PROPOSED DIRECTIONAL TRAFFIC ARROW
- PROPOSED SIGN
- (8) PROPOSED PARKING STALL COUNT
- 1335 PROPOSED INDEX CONTOUR
- 1334 PROPOSED INTERMEDIATE CONTOUR
- 1019.50 PROPOSED SPOT ELEVATION
- TC=1022.50 BC=1022.00 PROPOSED TOP OF CURB ELEVATION / PROPOSED BOTTOM OF CURB ELEVATION
- ST PROPOSED FOUNDATION DRAIN
- ST PROPOSED STORM SEWER PIPE
- UD PROPOSED UNDERDRAIN
- PROPOSED ENDWALL (W/ RIPRAP APRON)
- PROPOSED INLET/CATCH BASIN
- PROPOSED NPDES PERMIT BOUNDARY
- PROPOSED LIMIT OF DISTURBANCE BOUNDARY
- FS PROPOSED FILTER SOCK
- PROPOSED EROSION CONTROL BLANKET
- PROPOSED STOCKPILE AREA
- PROPOSED ROCK CONSTRUCTION ENTRANCE
- PROPOSED INLET FILTER BAG
- EXISTING SOIL UNIT BOUNDARY
- GpC EXISTING SOIL UNIT LABEL

COMPOST FILTER SOCK SIZING CHART

SOCK NO.	DIAMETER (IN.)	LOCATION	SLOPE (%)	SLOPE LENGTH ABOVE BARRIER (FT.)
1	18	ALONG THE NORTHERN PROPERTY LINE – COUNT: 6	5, 8, 27	195, 32, 21
2	18	ALONG THE NORTHERN PROPERTY LINE, EAST OF SOCK GROUP 1 – COUNT: 1	48, 2	32, 37
3	32	ALONG THE EASTERN PROPERTY LINE – COUNT: 9	6, 50, 4	206, 18, 94
4	24	NORTH SIDE OF ENTRANCE – COUNT: 1	12, 10, 6	97, 101, 44
5	18	SOUTH SIDE OF ENTRANCE – COUNT: 2	14, 27, 3	88, 22, 60
6	8	ALONG INSIDE CURVE OF ENTRANCE AND ENTIRE LENGTH OF GUIDERAIL – COUNT: 9	5	50

REFERENCE: PADEP E&S MANUAL STANDARD E&S WORKSHEET NO. 1

SITE SOIL CLASSIFICATION TABLE

SYMBOL	SOIL TYPE	HSG
CIB	CAVODE SILT LOAM, 3–8% SLOPES	C/D
GpC	GILPIN–WHARTON SILT LOAMS, 8–15% SLOPES	C
UeB	URBAN LAND–ERNEST COMPLEX, 0–8% SLOPES	D
WaB	WHARTON SILT LOAM, 3–8% SLOPES	C/D

ONE CALL SERIAL NO.: 20162702202

CALL BEFORE YOU DIG!
PENNSYLVANIA LAW REQUIRES 3 WORKING DAYS NOTICE FOR CONSTRUCTION PHASE AND 10 WORKING DAYS IN DESIGN STAGE–STOP CALL PENNSYLVANIA ONE CALL SYSTEM, INC.
1–800–242–1776

PENNSYLVANIA ACT 38 (1991) REQUIRES NO LESS THAN 3 WORKING DAYS NOTICE NOR MORE THAN 10 WORKING DAYS NOTICE FROM EXCAVATORS WHO ARE ABOUT TO: DIG, DRILL, BLAST, AUGER, BORE, GRADE, TRENCH, OR DEMOLISH WHEN IN THE CONSTRUCTION PHASE. FOR LOCATION REQUESTS IN THE STATE OF PENNSYLVANIA, CALL TOLL FREE 1–800–242–1776. UNDERGROUND UTILITIES HAVE BEEN PLOTTED FROM AVAILABLE INFORMATION AND THE LOCATION MUST BE CONSIDERED APPROXIMATE. OTHER UNDERGROUND UTILITIES MAY EXIST WHICH ARE NOT SHOWN. IT WILL BE THE CONTRACTOR'S RESPONSIBILITY TO ASCERTAIN ALL PHYSICAL LOCATIONS OF UTILITY LINES PRIOR TO THE TIME OF CONSTRUCTION. IN NO WAY SHALL THE CONTRACTOR HOLD THE SURVEYOR RESPONSIBLE FOR ANY UTILITY LOCATION SHOWN ON THIS PLAN.

PLAN BOOK	PAGE
365	30

SCALE IN FEET
0 20 40

REGISTERED PROFESSIONAL ENGINEER
CHRISTOPHER J. REMLEY
NO. 079995
COMMONWEALTH OF PENNSYLVANIA

REFERENCE

1. VERTICAL DATUM IS BASED UPON NAVD88, AS DETERMINED BY CIVIL & ENVIRONMENTAL CONSULTANTS, INC., USING SURVEY GRADE GPS MEASUREMENTS AND OPUS POST-PROCESSING.
2. FIELD SURVEY BY CIVIL & ENVIRONMENTAL CONSULTANTS, INC. DATED 09/27/2016.

OFF-SITE RECEIVING WATERS OF THE COMMONWEALTH

TRIBUTARY 63811 TO MUDDY CREEK – WARM WATER FISHES (WWF)

REFERENCE: CHAPTER 93 WATER QUALITY STANDARDS, DEPARTMENT OF ENVIRONMENTAL PROTECTION, TITLE 25 ENVIRONMENTAL RESOURCES, COMMONWEALTH OF PENNSYLVANIA

SUBMITTAL & REVISION RECORD

NO	DATE	DESCRIPTION
1	02/15/2017	LAND DEVELOPMENT SUBMISSION TO MUDDY CREEK TOWNSHIP
2	03/03/2017	APCD SUBMISSION TO BUTLER COUNTY CONSERVATION DISTRICT
3	03/06/2017	RESPONSE TO COMMENTS FROM ENGINEERS DATED 03/03/2017
4	03/08/2017	HART PRELIMINARY CIVIL SET SUBMISSION
5	03/30/2017	RESPONSE TO COMMENTS SUBMISSION TO BCCD DATED 3/14/2017
6	04/05/2017	FINAL LAND DEVELOPMENT PLAN SET SUBMISSION TO MUDDY CREEK TOWNSHIP
7	05/15/2017	RESPONSE TO COMMENTS FROM PTV DATED 05/01/2017 & FINAL SUBMISSION TO BCCD FOR NPDES PERMIT
8	07/13/2017	FINAL LAND DEVELOPMENT PLAN SET SUBMISSION TO MUDDY CREEK TOWNSHIP

Civil & Environmental Consultants, Inc.
333 Baldwin Road · Pittsburgh, PA 15205
412-429-2324 · 800-365-2324
www.cecinc.com

PTV XX, LLC
PORTERSVILLE DOLLAR GENERAL STORE
MUDDY CREEK TOWNSHIP
BUTLER COUNTY, PENNSYLVANIA

EROSION AND SEDIMENTATION CONTROL PLAN

DATE:	FEBRUARY 15, 2017	DRAWN BY:	EJB/DMO
DWG SCALE:	AS SHOWN	CHECKED BY:	*CJR
PROJECT NO:			163-826
APPROVED BY:			*GPQ

DRAWING NO.: C900
SHEET 18 OF 21

*HAND SIGNATURE ON FILE

P:\2016\163-826\1-CADD\Dwg\09011\163826-C901-C903.dwg(C900) 15:56:8/2017 - ejbriley - LP: 7/17/2017 4:07 PM

TEMPORARY CONTROL MEASURES

THE E&S CONTROL FACILITIES FOR THE PROPOSED PORTERSVILLE DOLLAR GENERAL STORE PROJECT ARE SHOWN ON THE E&S CONTROL PLAN. CONTROL MEASURES SHOWN ON THIS PLAN ARE MINIMUM CONTROLS TO PROTECT OFFSITE AREAS FROM SEDIMENT-LADEN RUNOFF. ADDITIONAL CONTROLS MAY BE REQUIRED DEPENDING ON THE PROGRESS OF CONSTRUCTION AND VARYING CONDITIONS ENCOUNTERED.

A. ROCK CONSTRUCTION ENTRANCE

A ROCK CONSTRUCTION ENTRANCE WILL BE PROVIDED AT THE LOCATION SHOWN ON THE PLANS AND IN ACCORDANCE WITH THE STANDARD DETAIL TO REMOVE SEDIMENT/MUD FROM VEHICLES BEFORE ENTERING CITY ROADS.

INSTALLATION: TO CONSTRUCT THE PAD, PLACE A LAYER OF GEOTEXTILE AND AN INITIAL 2 TO 3 INCHES OF STONE ACROSS THE FULL WIDTH OF THE VEHICLE INGRESS AND EGRESS AREA. THE STONE PAD SHOULD BE AT LEAST 50 FEET IN LENGTH, 20 FEET IN WIDTH, AND 8 INCHES THICK. COMPLETE THE PLACEMENT OF STONE TO THE REQUIRED THICKNESS.

MAINTENANCE: ROCK CONSTRUCTION ENTRANCE THICKNESS SHALL BE CONSTANTLY MAINTAINED TO THE SPECIFIED DIMENSIONS BY ADDING ROCK. A STOCKPILE SHALL BE MAINTAINED ON SITE FOR THIS PURPOSE. ALL SEDIMENT DEPOSITED ON PAVED ROADWAYS SHALL BE REMOVED AND RETURNED TO THE CONSTRUCTION SITE IMMEDIATELY. IF EXCESSIVE AMOUNTS OF SEDIMENT ARE BEING DEPOSITED ON ROADWAY, EXTEND LENGTH OF ROCK CONSTRUCTION ENTRANCE BY 50 FOOT INCREMENTS UNTIL CONDITION IS ALLEVIATED OR INSTALL WASH RACK. WASHING THE ROADWAY OR SWEEPING THE DEPOSITS INTO ROADWAY DITCHES, SEWERS, CULVERTS, OR OTHER DRAINAGE AREAS IS NOT ACCEPTABLE.

B. TEMPORARY VEGETATIVE STABILIZATION

INSTALLATION: FERTILIZING, SEEDING, AND MULCHING WILL BE USED AS A TEMPORARY E&S CONTROL MEASURE ON ALL NON-PAVED DISTURBED AREAS. EXPOSED SOILS, NOT SUBJECT TO CONSTRUCTION TRAFFIC, SHALL NOT REMAIN UNSEEDED OR UNCOVERED BY MULCH FOR MORE THAN 4 DAYS, INCLUDING STOCKPILED SOIL MATERIALS. WITH REGARD TO THE TEMPORARY SEED MIX, REFER TO THE SEEDING MIXTURE TABLE PROVIDED ON THE E&S CONTROL PLAN DETAIL SHEET. UNLESS THE OWNER'S REPRESENTATIVE DIRECTS OTHERWISE, VEGETATION SHALL BE ESTABLISHED AS FOLLOWS.

1. SOIL PLACEMENT: SOIL SHALL BE PLACED TO THE DESIGN THICKNESS AND GRADE AND TRACKED AND ROLLED INTO PLACE IN A MANNER THAT WILL NO CAUSE EXCESSIVE COMPACTION. IF SOIL DENSITY IS VERIFIED IN THE FIELD, SOIL SHALL BE COMPACTED TO A DRY DENSITY BETWEEN 75 AND 100 POUNDS PER CUBIC FOOT AFTER CORRECTION TO ZERO PERCENT COARSE FRAGMENT (PARTICLES LARGER THAN 2 MILLIMETERS) CONTENT.
2. SOIL TESTING AND SOIL AMENDMENT (LIME AND FERTILIZER) RATES: UNLESS SOIL TEST RESULTS AND RECOMMENDATIONS FROM THE STATE AGRICULTURAL EXTENSION SERVICE LABORATORY (PENN STATE AGRICULTURAL ANALYTICAL SERVICES LABORATORY [814-863-0841] OR EQUIVALENT SOIL TESTING LABORATORY) INDICATE OTHERWISE, EVENLY APPLY: 1) AGRICULTURAL GRADE GROUND LIMESTONE AT A RATE OF 2 TONS PER ACRE (CALCIUM CARBONATE EQUIVALENT BASIS); 2) FERTILIZERS TO SUPPLY 100-200-200 POUNDS PER ACRE $N-P_2O_5-K_2O$ (EXAMPLE: 10-20-20 FERTILIZER AT A RATE OF 1000 POUNDS PER ACRE); AND 3) "BIOPAK" MICROBIAL SOIL INOCULANT (DISTRIBUTED BY PLANT HEALTH CARE, INC. [WWW.PLANTHEALTHCARE.COM OR 800-421-9051]). IF APPROVED PASTEURIZED PELLETIZED POULTRY MANURE (PASTEURIZED PPM) WITH AN ANALYSIS OF AT LEAST 4-2-3 (PERCENT $N-P_2O_5-K_2O$) IS USED, IT WILL BE ASSUMED THAT ONE TON MANURE WILL SUBSTITUTE FOR 60-40-60 POUNDS $N-P_2O_5-K_2O$ AVAILABLE IN THE FIRST YEAR. A PRE-APPROVED SOURCE OF PASTEURIZED PPM IS "MICRO-START 60" AS MANUFACTURED BY PERDUE AGRIRECYCLE, LLC (WWW.MICROSTART60.COM OR 302-628-2360). IF SOIL AMENDMENTS CAN BE MIXED INTO A HYDROMULCH SLURRY OR CAN BE TRACKED IN WITH A DOZER IN LIEU OF INCORPORATION. IF TRACKING THE SITE WITH A DOZER, TRACK IN A MANNER THAT LEAVES CLEAT MARKS PARALLEL TO SITE CONTOURS.
3. SOIL AMENDMENT INCORPORATION: PROMPTLY TILL UNDER THE LIME AND FERTILIZER TO A DEPTH OF 2 TO 4 INCHES USING A DISK, HARROW, PLOW, ROTOTILLER OR OTHER SUITABLE EQUIPMENT. IF LIME REQUIREMENTS ARE LESS THAN 4 TONS PER ACRE OR SLOPES ARE TOO STEEP TO PERMIT SAFE TILLAGE, THE SOIL AMENDMENTS CAN BE MIXED INTO A HYDROMULCH SLURRY OR CAN BE TRACKED IN WITH A DOZER IN LIEU OF INCORPORATION. IF TRACKING THE SITE WITH A DOZER, TRACK IN A MANNER THAT LEAVES CLEAT MARKS PARALLEL TO SITE CONTOURS.
4. TEMPORARY SEEDING THAT WILL NOT BE FOLLOWED BY PERMANENT SEEDING, SUCH AS TOPSOIL STOCKPILES OR INTERIM GRADING PATTERNS, DOES NOT REQUIRE THE APPLICATION OF SLOW RELEASE FERTILIZER OR 'BIOPAK' INOCULANT.
5. SEEDBED PREPARATION: JUST BEFORE SEEDING, PREPARE SEEDBED BY TRACKING, RAKING, OR OTHER APPROPRIATE METHOD AS NECESSARY TO BREAK UP SOIL CRUSTS. IF TRACKING THE SITE WITH A DOZER, TRACK IN A MANNER THAT LEAVES CLEAT MARKS PARALLEL TO SITE CONTOURS.
6. SEEDING: EVENLY APPLY THE TEMPORARY SEED MIXTURES USING HYDROSEEDING, BROADCAST, OR DRILL SEEDING METHODS THAT PLANT SEED LESS THAN ONE-QUARTER INCH BELOW THE GROUND SURFACE. APPLY LEGUME SEED INOCULANTS SPECIFICALLY MADE FOR THE LEGUME SEED TYPE BEING APPLIED AT FIVE TIMES THE MANUFACTURER'S RECOMMENDED RATE. USE NO SEED OR INOCULANT THAT HAS BEEN IMPROPERLY STORED OR EXPIRED, OR SEED OLDER THAN 9 MONTHS FROM THE SEED TEST DATE. IF HYDROSEEDING METHODS ARE USED, SEED, INOCULANTS, FERTILIZERS, AND POLYMER TACKIFIER/SOIL STABILIZER (BELOW) MAY BE APPLIED IN ONE APPLICATION, PROVIDED THAT SEED AND INOCULANTS ARE NOT HELD IN A SLURRY WITH FERTILIZERS FOR MORE THAN ONE HOUR.
7. MULCHING AND TACKING: PROMPTLY AFTER SEEDING, MULCH USING EITHER 1) "CURLEX" OR EQUIVALENT BRAND OF WOOD EXCELSIOR EROSION CONTROL BLANKET; 2) SYNTHETIC INDUSTRIES TRM 450 OR NORTH AMERICAN GREEN P-300 TURF REINFORCEMENT MAT; 3) STRAW APPLIED AT A RATE OF 6,000 POUNDS PER ACRE; OR 4) WOOD/CELLULOSE FIBER HYDROMULCH APPLIED WITH A HYDROSEEDER AT A RATE OF 3,000 POUNDS PER ACRE. WOOD/CELLULOSE FIBER HYDROMULCH MUST CONTAIN AT LEAST 50% VIRGIN WOOD FIBER. IF AT LEAST 1,000 POUNDS PER ACRE APPROVED PASTEURIZED PPM IS BEING APPLIED WITH A HYDROSEEDER, WOOD/CELLULOSE FIBER HYDROMULCH RATES MAY BE REDUCED TO 2,500 POUNDS PER ACRE.

IN SOME LOCATIONS SHOWN ON THE DRAWINGS, SUCH AS SLOPES STEEPER THAN 3:1 (H:V), EROSION CONTROL BLANKET OR TURF REINFORCEMENT MAT (TRM) MAY BE THE ONLY PERMISSIBLE MULCHING OPTION. INSTALL EROSION CONTROL BLANKETS/TRM PER MANUFACTURER'S INSTRUCTIONS. STAPLE BLANKET/TRM IN PLACE USING 6-INCH (MINIMUM) SOD STAPLES IN ROWS AT THE EDGES AND CENTERLINE OF THE BLANKET AND ON 24-INCH OR CLOSER CENTERS.

TACK STRAW IN PLACE USING EITHER: 1) A CRIMPER DISK; 2) WOOD/CELLULOSE FIBER HYDROMULCH APPLIED OVER THE STRAW AT A RATE OF 800 TO 1,000 POUNDS PER ACRE; OR 3) WATER SOLUBLE LINEAR POLYACRYLATE (SODIUM ACRYLATE/ACRYLAMIDE) COPOLYMER "POLYMER" AT A RATE OF AT LEAST 8 POUNDS PER ACRE APPLIED IN MIXTURE WITH WATER OVER THE STRAW. APPROVED POLYMER BRANDS INCLUDE "WATERSORB™ PAM" OR "HYDROPAM™" DISTRIBUTED BY POLYMERS, INC. (WWW.WATERSORB.COM OR 501-623-9995), "TERRAPAM™" DISTRIBUTED BY PLANT HEALTH CARE, INC. (WWW.PLANTHEALTHCARE.COM OR 800-421-9051), AND "HYDROGEL B™" DISTRIBUTED BY FINN CORPORATION (WWW.FINNCORP.COM OR 800-543-7166).

TACK WOOD/CELLULOSE FIBER HYDROMULCH IN PLACE USING "POLYMER" SPECIFIED ABOVE AT A RATE OF AT LEAST 4 POUNDS PER ACRE APPLIED IN A SLURRY WITH THE HYDROMULCH.

MAINTENANCE: WATER AS NECESSARY TO ESTABLISH AND MAINTAIN VEGETATION. IN MOWED AREAS, MOW TO MAINTAIN GRASS HEIGHT BETWEEN 4 AND 6 INCHES TALL FOR FIRST TWO MONTHS OF GROWTH DURING THE ESTABLISHMENT YEAR, AND TO THE DESIRED HEIGHT THEREAFTER. IF STRING TRIMMERS ARE USED, TAKE MEASURES TO AVOID DAMAGE TO BARK OF TREES AND SHRUBS.

C. COMPOST FILTER SOCK

THE COMPOST FILTER SOCK AS MANUFACTURED BY FILTREXX, OR EQUIVALENT SHALL BE USED IN THE LOCATIONS INDICATED ON THE PLAN. REFER TO TABLE 4.1 AND TABLE 4.2, SHEET C902, FOR COMPOST STANDARDS.

INSTALLATION:
1. PLACE COMPOST FILTER SOCKS WHERE INDICATED AT LEVEL GRADE ALONG CONTOURS, PERPENDICULAR TO THE DIRECTION OF WATER FLOW. EXTEND BOTH ENDS AT LEAST 8' UP THE SLOPE AT 45 DEGREES TO MAIN SOCK ALIGNMENT.
2. USE WOODEN STAKES TO SECURE THE FILTER SOCKS. WOODEN STAKES MUST BE 2-INCHES BY 2-INCHES AND OF SUFFICIENT LENGTH THAT STAKES WILL BE EMBEDDED A MINIMUM 12-INCHES INTO THE SOIL AND BE EXPOSED 3-INCHES OUT OF THE FILTER SOCK. DRIVE THE STAKES THROUGH THE FILTER SOCK LEAVING NO MORE THAN 3 TO 4 INCHES OF THE STAKE OR PIN EXPOSED. PLACE STAKES EVERY 10 FEET. ADDITIONAL STAKES MAY BE REQUIRED.
3. WHEN MORE THAN ONE LENGTH OF FILTER SOCK IS USED, OVERLAP ENDS A MINIMUM OF 24-INCHES.
4. BACKFILL ALONG UPSLOPE SIDE OF FILTER SOCKS WITH LOOSE COMPOST, FILLING THE SEAM BETWEEN THE SOIL SURFACE AND FILTER SOCK.

MAINTENANCE: ACCUMULATED SEDIMENT SHALL BE REMOVED WHEN IT REACHES HALF THE ABOVE GROUND HEIGHT OF THE SOCK AND DISPOSED IN THE MANNER DESCRIBED ELSEWHERE IN THE PLAN. SOCKS SHALL BE INSPECTED WEEKLY AND AFTER EACH RUNOFF EVENT. DAMAGED SOCKS SHALL BE REPAIRED ACCORDING TO MANUFACTURER'S SPECIFICATIONS OR REPLACED WITHIN 24-HOURS OF INSPECTION. BIODEGRADABLE FILTER SOCKS SHALL BE REPLACED AFTER 6 MONTHS; PHOTODEGRADABLE SOCKS AFTER 1 YEAR. POLYPROPYLENE SOCKS SHALL BE REPLACED ACCORDING TO MANUFACTURER'S RECOMMENDATIONS. UPON STABILIZATION OF THE AREA TRIBUTARY TO THE SOCK, STAKES SHALL BE REMOVED. THE SOCK MAY BE LEFT IN PLACE AND VEGETATED OR REMOVED. IN THE LATTER CASE, THE MESH SHALL BE CUT OPEN AND THE MULCH SPREAD AS A SOIL SUPPLEMENT.

D. STORM SEWER INLET PROTECTION

CURB AND GRATED INLETS ARE PROTECTED FROM THE INTRUSION OF SEDIMENT THROUGH A VARIETY OF MEASURES AS SHOWN ON THE DETAILS INCLUDED IN THE CONSTRUCTION DRAWINGS. THE PRIMARY MECHANISM IS TO PLACE CONTROLS IN THE PATH OF FLOW SUFFICIENT TO SLOW THE SEDIMENT-LADEN WATER TO ALLOW SETTLEMENT OF SUSPENDED SOILS BEFORE DISCHARGING INTO THE STORM SEWER. IT IS POSSIBLE THAT AS CONSTRUCTION PROGRESSES FROM STORM SEWER INSTALLATION THROUGH TO PAVING THAT THE INLET PROTECTION DEVICES WILL CHANGE.

INLET FILTER BAGS WILL BE PROVIDED AT ALL STORM SEWER INLETS AS THEY ARE INSTALLED TO FILTER SEDIMENT-LADEN WATER PRIOR TO ENTERING THE STORM SEWER SYSTEM.

INSTALLATION: THE INLET FILTER BAGS SHALL BE INSTALLED IN THE LOCATIONS SHOWN ON THE PLANS AND IN ACCORDANCE WITH THE MANUFACTURER'S RECOMMENDATIONS.

MAINTENANCE: ALL INLET FILTER BAGS SHALL BE CLEANED AND/OR REPLACED WHEN THE BAG IS HALF FULL IN ACCORDANCE WITH THE MANUFACTURER'S RECOMMENDATIONS. ALL DAMAGED INLET FILTER BAGS SHALL BE REPLACED. THE ACCUMULATED SEDIMENT SHALL BE DISTRIBUTED EVENLY AMONG THE SITE AND STABILIZED.

E. EROSION CONTROL BLANKET

NORTH AMERICAN GREEN SC150BN OR APPROVED EQUIVALENT EROSION CONTROL BLANKET WILL BE USED TO PREVENT EROSION FROM THE GRADING OPERATIONS AND INSTALLED ON PERMANENT SLOPES. THE EROSION CONTROL BLANKETS WILL PROVIDE EROSION PROTECTION AND ASSIST WITH VEGETATION ESTABLISHMENT FOR UP TO 12 MONTHS. AFTER A 12 MONTH PERIOD THE BLANKETS WILL BIODEGRADE LEAVING A STABLE VEGETATED ROOT STRUCTURE.

INSTALLATION:
1. PREPARE SOIL ON ALL ESTABLISHED TEMPORARY AND PERMANENT SLOPE AND ANY NECESSARY APPLICATION OF FERTILIZER AND SEED. SEE THE SEED MIXTURE TABLE LOCATED ON THE E&S CONTROL PLAN NOTES SHEET BEFORE INSTALLING EROSION CONTROL BLANKET.
2. BEGIN AT THE TOP OF THE SLOPE BY ANCHORING THE EROSION CONTROL BLANKET IN A 4 INCH BY 8 INCH WIDE TRENCH WITH APPROXIMATELY 12 INCHES OF BLANKET EXTENDED BEYOND THE UP-SLOPE PORTION OF THE TRENCH. BACKFILL AND COMPACT THE TRENCH AFTER STAPLING. APPLY SEED TO COMPACTED SOIL AND FOLD REMAINING 12 INCH PORTION OF THE EROSION CONTROL BLANKET BACK OVER SEED AND COMPACTED SOIL. SECURE BLANKET OVER COMPACTED SOIL WITH A ROW OF STAPLES SPACED APPROXIMATELY 12 INCHES APART ACROSS THE WIDTH OF THE BLANKET.
3. ROLL THE EROSION CONTROL BLANKET DOWN THE SLOPE. BLANKET WILL UNROLL WITH APPROPRIATE SIDE AGAINST THE SOIL SURFACE. ALL BLANKETS MUST BE SECURELY FASTENED TO SOIL SURFACE BY PLACING STAPLES IN APPROPRIATE LOCATIONS AS RECOMMENDED BY THE MANUFACTURER.
4. THE EDGE OF PARALLEL BLANKETS MUST BE STAPLED WITH APPROXIMATELY 2 TO 5 INCH OVERLAP.

MAINTENANCE: THE EROSION CONTROL BLANKETS SHALL BE INSPECTED WEEKLY AND AFTER EVERY RAINFALL EVENT TO LOOK FOR SCOUR/WASHOUT AREAS. ANY SCOURED AREAS SHALL BE FIXED IMMEDIATELY BY COMPACTING SOIL IN THE WASHOUT AREA AND PLACING SEED. ANY DAMAGED EROSION CONTROL BLANKETS SHALL BE REPLACED IMMEDIATELY. BLANKETS SHALL BE MAINTAINED UNTIL A UNIFORM 70% PERENNIAL VEGETATION HAS BEEN ESTABLISHED.

F. CONSTRUCTION/PROJECT WASTE RECYCLING/DISPOSAL

CONSTRUCTION WASTES ARE REFUSE MATERIALS THAT ARE EXISTING ON-SITE OR GENERATED DURING THE COURSE OF CONSTRUCTION AND INCLUDE, BUT ARE NOT LIMITED TO, PAPER, PLASTIC, RUBBER, CONCRETE WASTE WASH, GRASS CLIPPINGS, LEAVES, WOOD, TEXTILE, AND METAL PRODUCTS.

INSTALLATION: THE CONTRACTOR SHALL BE RESPONSIBLE FOR IDENTIFYING WASTE RECYCLING/DISPOSAL AREAS ON THE E&S PLAN ONCE THEY HAVE BEEN DETERMINED. THE CONTRACTOR SHALL BE RESPONSIBLE FOR OBTAINING ALL WASTE RECYCLING/DISPOSAL PERMITS PRIOR TO THE COMMENCEMENT OF CONSTRUCTION ACTIVITIES.

MAINTENANCE: ALL CONSTRUCTION WASTE SHALL BE REMOVED BY THE CONTRACTOR AND DISPOSED/RECYLED OF AT A STATE-APPROVED WASTE SITE AND/OR STATE APPROVED LANDFILL AND IN ACCORDANCE WITH ALL LOCAL/STATE CODES, PERMIT REQUIREMENTS, AND REGULATIONS. THE BURNING OF WASTE MATERIALS WILL NOT BE PERMITTED.

G. PUMPED WATER FILTER BAGS

FILTER BAGS MAY BE USED TO FILTER WATER PUMPED FROM DISTURBED AREAS PRIOR TO DISCHARGING TO WATERS OF THE COMMONWEALTH. THEY MAY ALSO BE USED TO FILTER WATER PUMPED FROM THE SEDIMENT STORAGE AREAS OF SEDIMENT BASINS.

INSTALLATION: FILTER BAGS SHALL BE MADE FROM NON-WOVEN GEOTEXTILE MATERIAL SEWN WITH HIGH-STRENGTH, DOUBLE-STITCHED "J"-TYPE SEAMS. THEY SHALL BE CAPABLE OF TRAPPING PARTICLES LARGER THAN 150 MICRONS.

A SUITABLE MEANS OF ACCESSING THE BAG WITH MACHINERY REQUIRED FOR DISPOSAL PURPOSES MUST BE PROVIDED. FILTER BAGS SHALL BE REPLACED WHEN THEY BECOME HALF FULL. SPARE BAGS SHALL BE KEPT AVAILABLE FOR REPLACEMENT OF THOSE THAT HAVE FAILED OR ARE FILLED.

BAGS SHALL BE LOCATED IN WELL VEGETATED (GRASSY) AREAS AND DISCHARGE ONTO STABLE EROSION RESISTANT AREAS. WHERE THIS IS NOT POSSIBLE, A GEOTEXTILE FLOW PATH SHALL BE PROVIDED. BAGS SHALL NOT BE PLACED ON SLOPES GREATER THAN 5%.

THE PUMP DISCHARGE HOSE SHALL BE INSERTED INTO THE BAGS IN THE MANNER SPECIFIED BY THE MANUFACTURER AND SECURELY CLAMPED. THE PUMPING RATE SHALL BE NO GREATER THAN 750 GPM OR ONE-HALF THE MAXIMUM SPECIFIED BY THE MANUFACTURER, WHICHEVER IS LESS. PUMP INTAKES SHALL BE FLOATING AND SCREENED.

MAINTENANCE: PUMP AND FILTER BAGS SHALL BE INSPECTED DAILY. IF ANY PROBLEM IS DETECTED, PUMPING SHALL CEASE IMMEDIATELY, AND SHALL NOT RESUME UNTIL THE PROBLEM IS CORRECTED. SEDIMENT REMOVED FROM THE FILTER BAG SHALL BE SPREAD ONSITE UPSTREAM FROM ESTABLISHED SEDIMENT CONTROLS, AND ALLOWED TO DRY. ONCE DRY, THE SEDIMENT MAY BE INCORPORATED ONSITE AS PART OF THE FILL.

H. TOPSOIL/MATERIAL STOCKPILE AREA

THERE WILL BE A DESIGNATED MATERIAL STOCKPILE AREA LOCATED ON THE PROPERTY. ALL SITE DEMOLITION MATERIAL SHALL BE STOCKPILED THERE UNTIL TRANSPORTED TO AN APPROVED PADEP DISPOSAL AREA.

INSTALLATION: INSTALL COMPOST FILTER SOCKS AROUND MATERIAL STOCKPILE.

MAINTENANCE: INSPECT TEMPORARY STOCKPILES WEEKLY. REPAIR OR REPLACE COMPOST FILTER SOCK AS NECESSARY TO MAINTAIN THE INTEGRITY OF THE SOCK MATERIAL.

I. CONCRETE WASHOUT

CONCRETE WASHOUTS SHALL BE CONSTRUCTED ONSITE TO CONTAIN ALL WASHOUT WATER FROM CONCRETE CONSTRUCTION ACTIVITIES. WASHOUTS SHALL BE CLEARLY MARKED.

INSTALLATION: WASHOUTS SHALL BE CONSTRUCTED IN ACCORDANCE WITH THE STANDARD DETAIL PROVIDED.

MAINTENANCE: WASHOUTS SHALL BE CLEANED OUT WHEN ACCUMULATED MATERIALS TAKE UP 2/3 OF THE AVAILABLE STORAGE CAPACITY. MATERIALS SHALL BE DISPOSED OF IN A PADEP-APPROVED FACILITY. MAKE ANY REPAIRS TO THE CONTAINMENT FACILITY AS NEEDED.

J. ORANGE CONSTRUCTION FENCE

ORANGE CONSTRUCTION FENCE SHALL BE INSTALLED TO PROTECT SENSITIVE AREAS PER THE PLAN.

INSTALLATION: ORANGE CONSTRUCTION FENCE SHALL BE INSTALLED AT THE LOCATION AS SHOWN ON THE PLANS AND IN ACCORDANCE WITH THE STANDARD DETAIL.

MAINTENANCE: THE FENCING MUST REMAIN IN PLACE DURING ALL PHASES OF CONSTRUCTION; ANY CHANGE OF THE PROTECTIVE FENCING MUST BE APPROVED BY THE OWNER AND ENGINEER OF RECORD.

BMP MAINTENANCE EROSION NOTES

IN ORDER TO ENSURE EFFECTIVE AND EFFICIENT OPERATION OF BMPS, ALL TEMPORARY RUNOFF E&S CONTROLS SHALL BE INSPECTED AT LEAST AT THE BEGINNING AND END OF EACH DAY AND AFTER EACH STORMWATER EVENT. ANY DAMAGED CONTROLS SHALL BE REPAIRED OR REPLACED WITHIN 24 HOURS OF IDENTIFICATION OF THE DEFICIENCY. THE CONTRACTOR IS RESPONSIBLE FOR ALL MAINTENANCE AND INSPECTIONS, AND SHALL MAINTAIN RECORDS OF ALL SUCH ACTIVITIES. A WRITTEN REPORT DOCUMENTING EACH INSPECTION AND ALL BMP REPAIR OR REPLACEMENT AND MAINTENANCE ACTIVITIES SHALL BE LOGGED ONTO PADEP FORM 3150-FM-BWEW0083, DATED 2/2012 AND BE KEPT ONSITE AT ALL TIMES.

ALL MEASURES STATES ON THE SITE MAP, AND IN THE POST-CONSTRUCTION STORMWATER MANAGEMENT PLAN, SHALL BE MAINTAINED IN FULLY FUNCTIONING CONDITION UNTIL NO LONGER REQUIRED FOR A COMPLETED PHASE OF WORK OR FINAL STABILIZATION OF THE SITE. ALL EROSION AND SEDIMENTATION CONTROL MEASURES SHALL BE CHECKED BY A QUALIFIED PERSON IN ACCORDANCE WITH THE CONTRACT DOCUMENTS OR THE APPLICABLE PERMIT. WHICHEVER IS MORE STRINGENT, AND REPAIRED IN ACCORDANCE WITH THE FOLLOWING:

1. INLET PROTECTION DEVICES AND BARRIERS SHALL BE REPAIRED OR REPLACED IF THEY SHOW SIGNS OF DETERIORATION.
2. ALL SEEDED AREA SHALL BE CHECKED REGULARLY TO SEE THAT A GOOD STAND IS MAINTAINED. AREAS SHOULD BE FERTILIZED, WATERED, AND RESEEDED AS NEEDED.
3. THE CONSTRUCTION EXITS SHALL BE REPAIRED TO THEIR ORIGINAL CONDITION TO PREVENT TRACKING OR FLOW OF MUD ONTO PUBLIC RIGHTS-OF-WAY.
4. THE TEMPORARY PARKING AND STORAGE AREAS SHALL BE KEPT IN GOOD CONDITION (SUITABLE FOR PARKING AND STORAGE). THIS MAY REQUIRE PERIODIC TOP DRESSING OF THE TEMPORARY PARKING AREA AS CONDITIONS DEMAND.
5. PRIOR TO LEAVING THE SITE, ALL VEHICLES SHALL BE CLEANED OF DEBRIS. ANY DEBRIS AND/OR SEDIMENT REACHING THE PUBLIC STREET SHALL BE CLEANED IMMEDIATELY BY A METHOD OTHER THAN FLUSHING.
6. ALL SEDIMENT REMOVED FROM EROSION CONTROL DEVICES LOCATED AROUND THE SITE SHALL BE DISPOSED OF EVENLY AMONG THE SITE. ONCE A UNIFORM 70% PERENNIAL VEGETATIVE COVER IS ESTABLISHED AND THE TEMPORARY E&S CONTROLS ARE REMOVED, ALL ACCUMULATED SEDIMENT WILL BE DISPOSED OF AT A PADEP APPROVED FACILITY.

CONSTRUCTION SEQUENCE

1. MOBILIZE EQUIPMENT, CONSTRUCTION TRAILER, MATERIAL STORAGE BINS, ETC. ONSITE.
2. LAYOUT THE LIMITS OF THE SITE, ESTABLISH BENCHMARKS, AND REFERENCE POINTS. FLAG THE LIMIT OF DISTURBANCE AND DO NOT DISTURB ANY TREES OR VEGETATION LOCATED OUTSIDE OF THOSE LIMITS.
3. INSTALL ORANGE CONSTRUCTION FENCE AT THE LOCATION AS SHOWN ON THE PLAN AND IN ACCORDANCE WITH THE STANDARD DETAIL. NO HEAVY MACHINERY IS PERMITTED WITHIN THIS AREA.
4. INSTALL ROCK CONSTRUCTION ENTRANCE AND TEMPORARY CONCRETE WASHOUT FACILITY AT THE LOCATIONS SHOWN ON THE PLAN AND IN ACCORDANCE WITH THE STANDARD DETAILS. CONSTRUCT ADDITIONAL ROCK CONSTRUCTION ENTRANCES WHERE ADDITIONAL ACCESSED TO THE SITE MAY BE NECESSARY EVEN THOUGH SUCH LOCATIONS ARE NOT SPECIFICALLY NOTED ON THE PLAN. ANY ADDITIONAL ENTRANCES MUST BE APPROVED BY THE CONSERVATION DISTRICT BEFORE INSTALLATION.
5. PERFORM INITIAL CLEARING AND GRUBBING FOR INSTALLATION OF PERIMETER BMPS. LIMIT CLEARING AND GRUBBING TO AREAS NECESSARY TO CONSTRUCT/INSTALL BMPS.
6. INSTALL COMPOST FILTER SOCKS AT LOCATIONS SHOWN ON THE PLAN AND IN ACCORDANCE WITH THE STANDARD DETAILS. COMPOST FILTER SOCKS SHALL BE SIZED TO THE SPECIFICATIONS AS STATED IN THE E&S PLAN NARRATIVE AND ON THE E&S PLAN DRAWINGS.
7. CLEAR AND GRUB AREAS OF THE SITE AS REQUIRED FOR CONSTRUCTION OF PROPOSED IMPROVEMENTS, INCLUDING REMOVAL OF EXISTING VEGETATION AND TREES. ALL GRUBBED MATERIAL, DEMOLITION DEBRIS AND OTHER WASTE MATERIALS SHALL BE DISPOSED OF AT A PADEP APPROVED WASTE SITE AND IN ACCORDANCE WITH ALL LOCAL AND STATE CODES AND PERMIT REQUIREMENTS. CARE SHOULD BE TAKEN WITHIN THE DISTURBANCE LIMITS REGARDING THE EXISTING UTILITIES. THE CONTRACTOR IS RESPONSIBLE FOR REPAIRING ANY DAMAGE TO THE EXISTING UTILITIES.
8. REMOVE TOPSOIL FROM THE REMAINING CONSTRUCTION AREA AND PLACE IN THE DESIGNATED STOCKPILE AREA AT THE LOCATION SHOWN ON THE PLANS.
9. BEGIN ROUGH GRADING AND CONSTRUCT THE BUILDING PAD.
10. CONTINUE ROUGH GRADING OPERATIONS FOR THE PROPOSED PARKING LOT AND FOR THE REMAINDER OF THE SITE.
11. INSTALL COMPOST FILTER SOCK IDENTIFIER SIX (6) AROUND AT THE LOCATIONS AS SHOWN ON THE PLANS AND IN ACCORDANCE WITH THE STANDARD DETAIL.
12. BEGIN CONSTRUCTION OF THE RETAIL BUILDING.

HALT ALL ACTIVITIES AND CONTACT CEC PRIOR TO THE BEGINNING OF THE NEXT STEP IN THE CONSTRUCTION SEQUENCE. THE CONSTRUCTION OF THE BIORETENTION BASIN CONSISTS OF CRITICAL STAGES THAT A LICENSED PROFESSIONAL OR DESIGNEE MUST BE ONSITE FOR INSPECTION. LICENSED PROFESSIONALS MUST BE LICENSED IN THE COMMONWEALTH OF PENNSYLVANIA.

13. UPON ACHIEVING FINAL SUB-GRADE ELEVATION, BEGIN PROPOSED BIO-RETENTION BASIN EXCAVATION/CONSTRUCTION IN ACCORDANCE WITH THE APPROVED DETAIL. BEGIN INSTALLATION OF THE STORM SEWERS (EW1-YD1, YD1-YD2, EW1-CB3, CB3-CB4, EW2-CB1, CB1-CB2, OS1-XCB1) ENDWALLS (EW1, EW2), STRUCTURES (CB1, CB2, CB3, CB4, YD1, YD2, OS1), AND OUTFALL PROTECTION (RIPRAP APRON EW1 AND RIPRAP APRON EW2) AS SHOWN ON THE PLANS AND IN ACCORDANCE WITH THE STANDARD DETAILS. ENSURE THAT ALL STORMWATER RUNOFF IS DIRECTED DOWNSTREAM SUCH THAT PONDING OR FLOODING DOES NOT OCCUR. INSTALL FILTER BAGS WITHIN ALL CATCH BASINS.
14. AS FINAL GRADES ARE ACHIEVED, BEGIN TRENCHING AND INSTALLING THE REMAINING PROPOSED UTILITIES. EXCAVATE TRENCHES ONLY AS REQUIRED. LIMIT DAILY TRENCH EXCAVATION TO THE LENGTH OF PIPE PLACEMENT, PLUG INSTALLATION, AND BACKFILLING THAT CAN BE COMPLETED THE SAME DAY. PLACE EXCAVATED MATERIAL ON THE UPSLOPE SIDE OF THE TRENCH. ANY ACCUMULATED WATER SHALL BE REMOVED BY PUMPING THROUGH A PUMPED WATER FILTER BAG. ON THE DAY FOLLOWING THE PIPE PLACEMENT AND TRENCH BACKFILLING, THE DISTURBED AREA SHALL BE GRADED TO FINAL SUBGRADE AND SEEDED AND MULCHED OR STABILIZED WITH STONE PER THE PERMANENT SEEDING SCHEDULE.
15. BEGIN FINE GRADING THE BUILDING'S SURROUNDING SIDEWALK, CONCRETE CURBS AND ADA AND LOADING RAMPS. FINE GRADE ALL PAVED AND OPEN SPACE AREAS AND INSTALL CURBS, SUBBASE, PAVING, AND ALL OTHER SITE RELATED ITEMS. SPREAD TOPSOIL, SEED AND MULCH OPEN SPACE AREAS WITHIN 24 HOURS OF COMPLETION.
16. ALL SLOPES 3H:1V OR STEEPER THAT HAVE REACHED FINAL GRADE SHALL RECEIVE EROSION CONTROL BLANKETING IN ACCORDANCE WITH THE STANDARD DETAIL.
17. BEGIN PAVING OPERATIONS.
18. ONCE CONSTRUCTION IS COMPLETED, REMOVE ANY SEDIMENT THAT MAY HAVE ACCUMULATED IN THE PROPOSED STORM SEWER SYSTEM. REMOVE THE ROCK CONSTRUCTION ENTRANCE AND CONCRETE WASHOUT FACILITY AND RE-ESTABLISH VEGETATIVE COVER IN THE DISTURBED AREA.
19. UPON COMPLETION OF ALL EARTH DISTURBANCE ACTIVITIES AND PERMANENT STABILIZATION OF ALL DISTURBED AREAS, THE OWNER AND/OR OPERATOR SHALL CONTACT THE BUTLER COUNTY CONSERVATION DISTRICT FOR AN INSPECTION PRIOR TO REMOVAL OF THE E&S BMPS.
20. ONCE THE SITE HAS ACHIEVED A UNIFORM 70% PERENNIAL VEGETATIVE COVER AND IMPERVIOUS AREAS ARE STABILIZED, REMOVE THE COMPOST FILTER SOCKS AND FILTER BAGS. ONCE THE EXTERIOR FILL SLOPES HAS ACHIEVED 90% VEGETATIVE COVER, REMOVE THE TOP OF SLOPE BERM. DISPOSE OF ANY REMAINING SILT AND COMPOST FILTER SOCKS AT A STATE-APPROVED WASTE SITE. SEED ALL REMAINING DISTURBED AREAS ONCE GRADING IS COMPLETE OR WITHIN FOUR (4) DAYS WHEN THE CONSTRUCTION HAS COMPLETED.

PERMANENT CONTROL MEASURES

A. PERMANENT VEGETATIVE STABILIZATION

INSTALLATION: FERTILIZING, SEEDING, AND MULCHING WILL BE USED AS A PERMANENT E&S CONTROL MEASURE ON ALL NON-PAVED DISTURBED AREAS. WITH REGARD TO THE PERMANENT SEED MIX, REFER TO THE SEEDING MIXTURE TABLE PROVIDED IN THE E&S CONTROL PLAN NOTES SHEET. UN

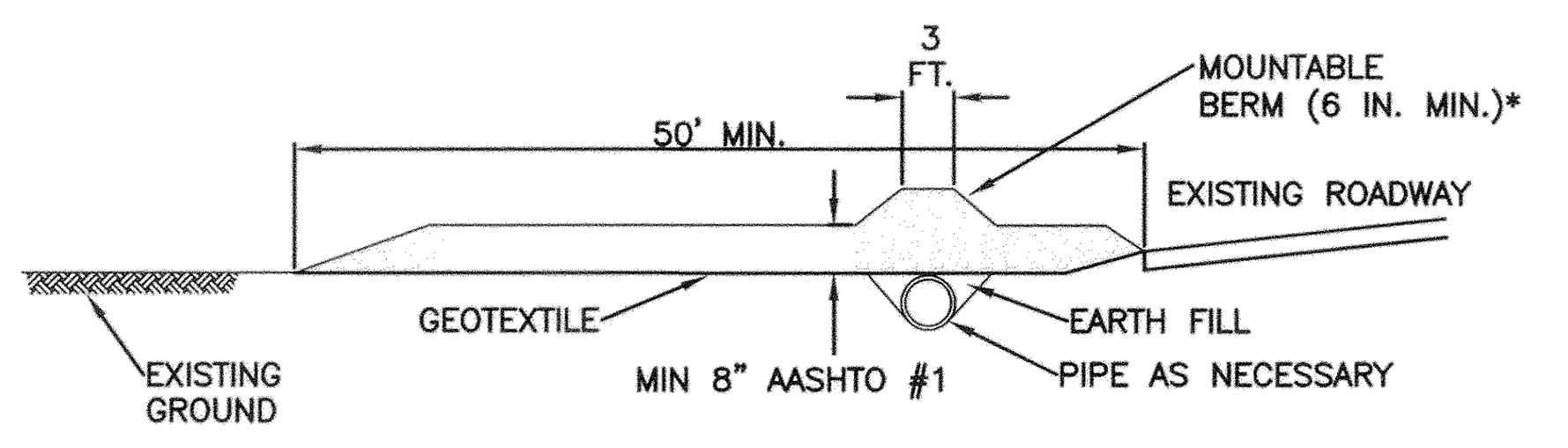

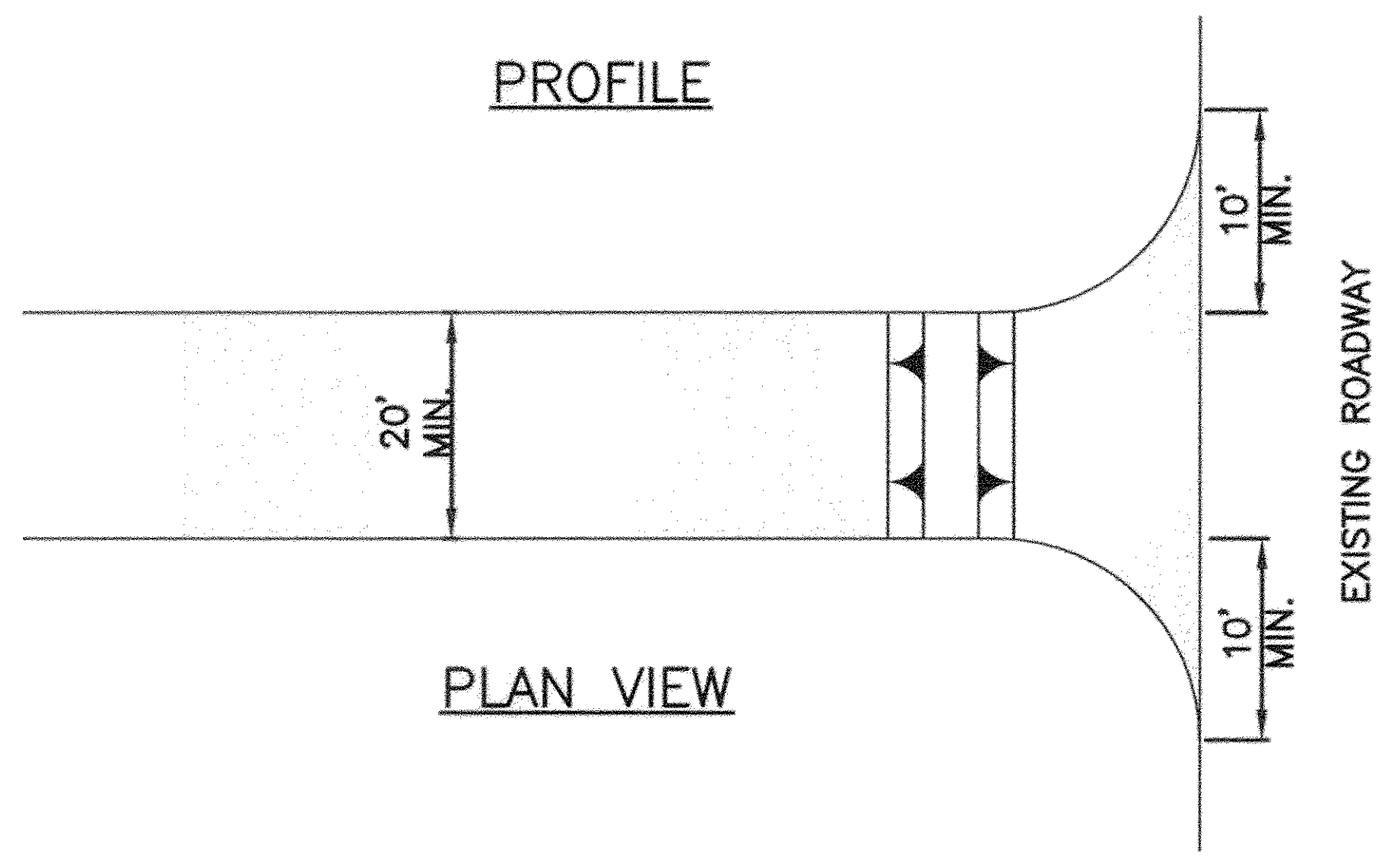

* MOUNTABLE BERM USED TO PROVIDE PROPER COVER FOR PIPE

NOTES:

1. REMOVE TOPSOIL PRIOR TO INSTALLATION OF ROCK CONSTRUCTION ENTRANCE. EXTEND ROCK OVER FULL WIDTH OF ENTRANCE.
2. RUNOFF SHALL BE DIVERTED FROM ROADWAY TO A SUITABLE SEDIMENT REMOVAL BMP PRIOR TO ENTERING ROCK CONSTRUCTION ENTRANCE.
3. MOUNTABLE BERM SHALL BE INSTALLED WHEREVER OPTIONAL CULVERT PIPE IS USED AND PROPER PIPE COVER AS SPECIFIED BY MANUFACTURER IS NOT OTHERWISE PROVIDED. PIPE SHALL BE SIZED APPROPRIATELY FOR SIZE OF DITCH BEING CROSSED.
4. MAINTENANCE: ROCK CONSTRUCTION ENTRANCE THICKNESS SHALL BE CONSTANTLY MAINTAINED TO THE SPECIFIED DIMENSIONS BY ADDING ROCK. A STOCKPILE SHALL BE MAINTAINED ON SITE FOR THIS PURPOSE. ALL SEDIMENT DEPOSITED ON PAVED ROADWAYS SHALL BE REMOVED AND RETURNED TO THE CONSTRUCTION SITE IMMEDIATELY. IF EXCESSIVE AMOUNTS OF SEDIMENT ARE BEING DEPOSITED ON ROADWAY, EXTEND LENGTH OF ROCK CONSTRUCTION ENTRANCE BY 50 FOOT INCREMENTS UNTIL CONDITION IS ALLEVIATED OR INSTALL WASH RACK. WASHING THE ROADWAY OR SWEEPING THE DEPOSITS INTO ROADWAY DITCHES, SEWERS, CULVERTS, OR OTHER DRAINAGE COURSES IS NOT ACCEPTABLE.

DETAIL 901
ROCK CONSTRUCTION ENTRANCE

N.T.S.

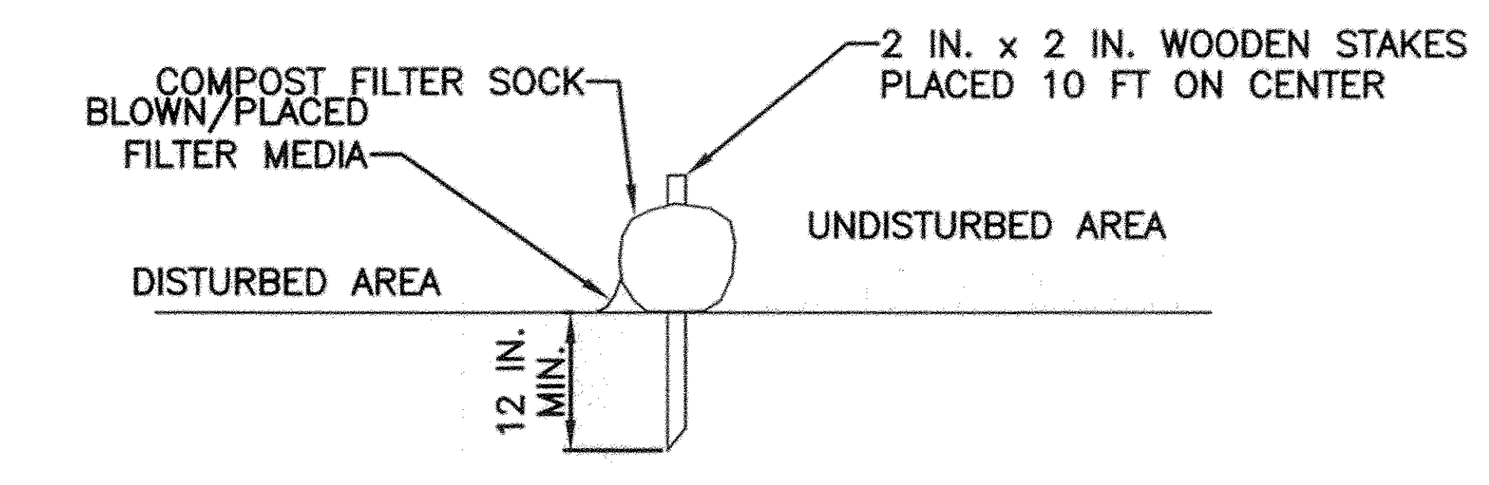

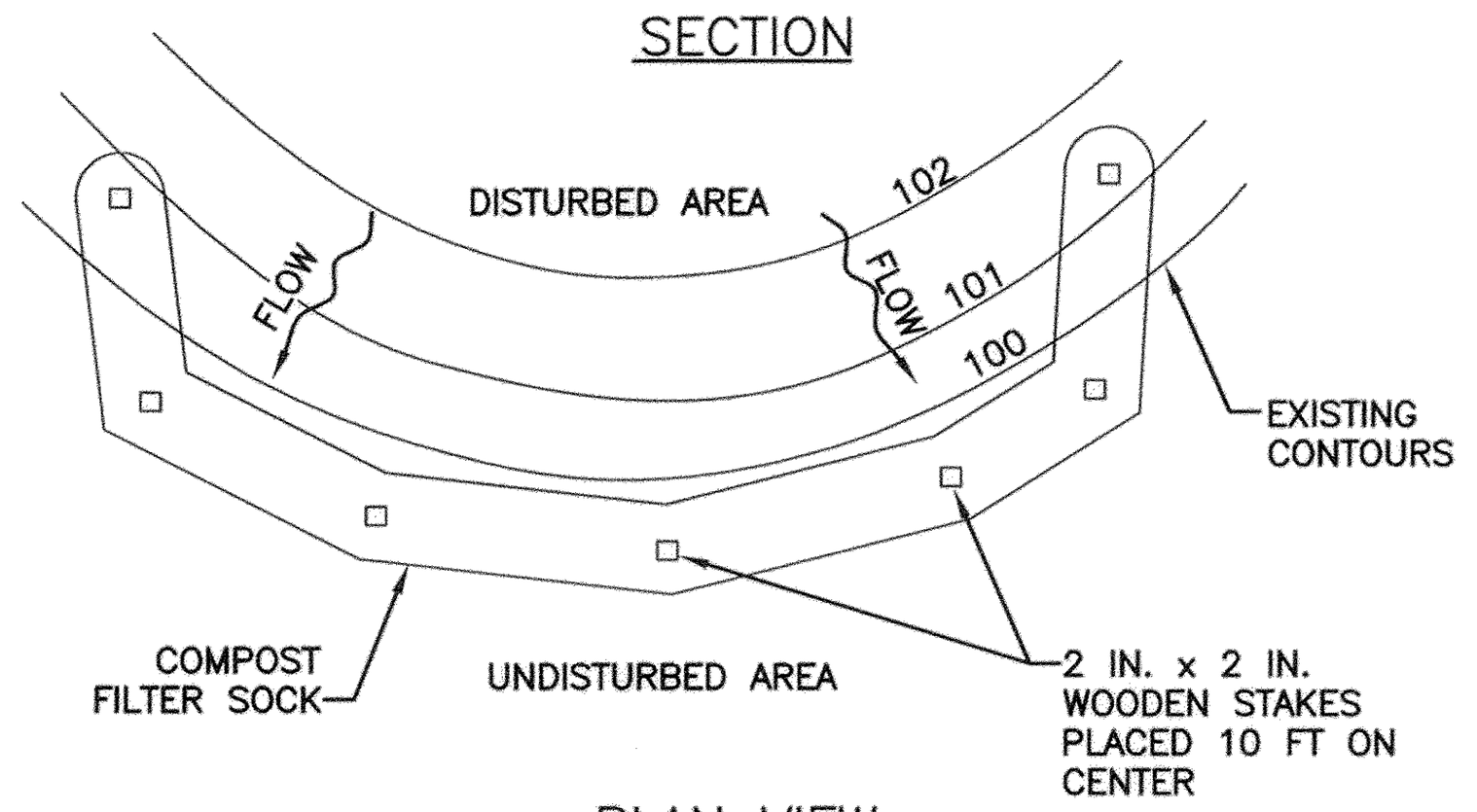

NOTES:

1. SOCK FABRIC SHALL MEET STANDARDS OF TABLE 4.1 OF THE PA DEP EROSION CONTROL MANUAL. COMPOST SHALL MEET THE STANDARDS OF TABLE 4.2 OF THE PA DEP EROSION CONTROL MANUAL.
2. COMPOST FILTER SOCK SHALL BE PLACED AT EXISTING LEVEL GRADE. BOTH ENDS OF THE BARRIER SHALL BE EXTENDED AT LEAST 8 FEET UP SLOPE AT 45 DEGREES TO THE MAIN BARRIER ALIGNMENT. MAXIMUM SLOPE LENGTH ABOVE ANY BARRIER SHALL NOT EXCEED THAT SPECIFIED FOR THE SIZE OF THE SOCK AND THE SLOPE OF ITS TRIBUTARY AREA.
3. TRAFFIC SHALL NOT BE PERMITTED TO CROSS COMPOST FILTER SOCKS.
4. ACCUMULATED SEDIMENT SHALL BE REMOVED WHEN IT REACHES 1/2 THE ABOVE GROUND HEIGHT OF THE BARRIER AND DISPOSED IN THE MANNER DESCRIBED ELSEWHERE IN THE PLAN.
5. COMPOST FILTER SOCKS SHALL BE INSPECTED WEEKLY AND AFTER EACH RUNOFF EVENT. DAMAGED SOCKS SHALL BE REPAIRED ACCORDING TO MANUFACTURER'S SPECIFICATIONS OR REPLACED WITHIN 24 HOURS OF INSPECTION.
6. BIODEGRADABLE COMPOST FILTER SOCKS SHALL BE REPLACED AFTER 6 MONTHS; PHOTODEGRADABLE SOCKS AFTER 1 YEAR. POLYPROPYLENE SOCKS SHALL BE REPLACED ACCORDING TO MANUFACTURER'S RECOMMENDATIONS.
7. UPON STABILIZATION OF THE AREA TRIBUTARY TO THE SOCK, STAKES SHALL BE REMOVED. THE SOCK MAY BE LEFT IN PLACE AND VEGETATED OR REMOVED. IN THE LATTER CASE, THE MESH SHALL BE CUT OPEN AND THE MULCH SPREAD AS A SOIL SUPPLEMENT.

DETAIL 902
COMPOST FILTER SOCK

N.T.S.

TABLE 4.1
Compost Sock Fabric Minimum Specifications

Material Type	3 mil HDPE	5 mil HDPE	5 mil HDPE	Multi-Filament Polypropylene (MFPP)	Heavy Duty Multi-Filament Polypropylene (HDMFPP)
Material Characteristics	Photo-degradable	Photo-degradable	Bio-degradable	Photo-degradable	Photo-degradable
Sock Diameters	12" 18"	12" 18" 24" 32"	12" 18" 24" 32"	12" 18" 24" 32"	12" 18" 24" 32"
Mesh Opening	3/8"	3/8"	3/8"	3/8"	1/8"
Tensile Strength		26 psi	26 psi	44 psi	202 psi
Ultraviolet Stability % Original Strength (ASTM G-155)	23% at 1000 hr.	23% at 1000 hr.		100% at 1000 hr.	100% at 1000 hr.
Minimum Functional Longevity	6 months	9 months	6 months	1 year	2 years
Two-ply systems					
Inner Containment Netting			HDPE biaxial net; Continuously wound; Fusion-welded junctures; 3/4" X 3/4" Max. aperture size		
Outer Filtration Mesh			Composite Polypropylene Fabric (Woven layer and non-woven fleece mechanically fused via needle punch); 3/16" Max. aperture size		
Sock fabrics composed of burlap may be used on projects lasting 6 months or less.					

Filtrexx & JMD

TABLE 4.2
Compost Standards

Organic Matter Content	25% - 100% (dry weight basis)
Organic Portion	Fibrous and elongated
pH	5.5 - 8.5
Moisture Content	30% - 60%
Particle Size	30% - 50% pass through 3/8" sieve
Soluble Salt Concentration	5.0 dS/m (mmhos/cm) Maximum

Filtrexx

COMPOST FILTER SOCK SIZING CHART

SOCK NO.	DIAMETER (IN.)	LOCATION	SLOPE (%)	SLOPE LENGTH ABOVE BARRIER (FT.)
1	18	ALONG THE NORTHERN PROPERTY LINE – COUNT: 6	5, 8, 27	195, 32, 21
2	18	ALONG THE NORTHERN PROPERTY LINE, EAST OF SOCK GROUP 1 – COUNT: 1	48, 2	32, 37
3	32	ALONG THE EASTERN PROPERTY LINE – COUNT: 9	6, 50, 4	206, 18, 94
4	24	NORTH SIDE OF ENTRANCE – COUNT: 1	12, 10, 6	97, 101, 44
5	18	SOUTH SIDE OF ENTRANCE – COUNT: 2	14, 27, 3	88, 22, 60
6	8	ALONG INSIDE CURVE OF ENTRANCE AND ENTIRE LENGTH OF GUIDERAIL – COUNT: 9	5	50

REFERENCE: PADEP E&S MANUAL STANDARD E&S WORKSHEET NO. 1

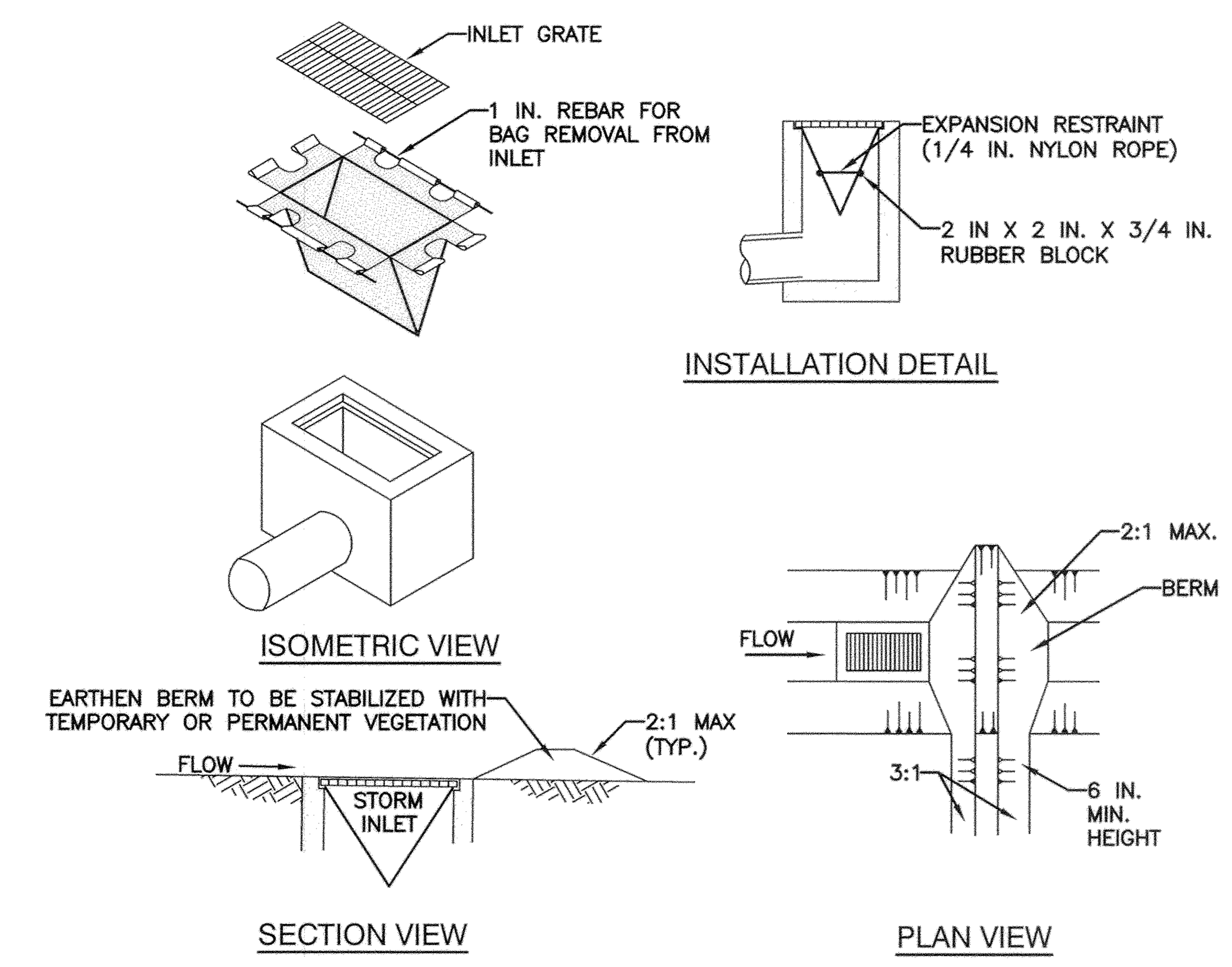

NOTES:

1. ROLLED EARTHEN BERM IN ROADWAY SHALL BE MAINTAINED UNTIL ROADWAY IS STONED. ROAD SUBBASE BERM ON ROADWAY SHALL BE MAINTAINED UNTIL ROADWAY IS PAVED. EARTHEN BERM IN CHANNEL SHALL BE MAINTAINED UNTIL PERMANENT STABILIZATION IS COMPLETED OR REMAIN PERMANENTLY.
2. AT A MINIMUM, THE FABRIC SHALL HAVE A MINIMUM GRAB TENSILE STRENGTH OF 120 LBS., A MINIMUM BURST STRENGTH OF 200 PSI, AND A MINIMUM TRAPEZOIDAL TEAR STRENGTH OF 50 LBS. FILTER BAGS SHALL BE CAPABLE OF TRAPPING ALL PARTICLES NOT PASSING A NO. 40 SIEVE.
3. INLET FILTER BAGS SHALL BE INSPECTED ON A WEEKLY BASIS AND AFTER EACH RUNOFF EVENT. BAGS SHALL BE EMPTIED AND RINSED OR REPLACED WHEN HALF FULL OR WHEN FLOW CAPACITY HAS BEEN REDUCED SO AS TO CAUSE FLOODING OR BYPASSING OF THE INLET. DAMAGED OR CLOGGED BAGS SHALL BE REPLACED. A SUPPLY SHALL BE MAINTAINED ON SITE FOR REPLACEMENT OF BAGS. ALL NEEDED REPAIRS SHALL BE INITIATED IMMEDIATELY AFTER THE INSPECTION. DISPOSE ACCUMULATED SEDIMENT AS WELL AS ALL USED BAGS ACCORDING TO THE PLAN NOTES.
4. DO NOT USE ON MAJOR PAVED ROADWAYS WHERE PONDING MAY CAUSE TRAFFIC HAZARDS.

DETAIL 903
INLET FILTER BAG

N.T.S.

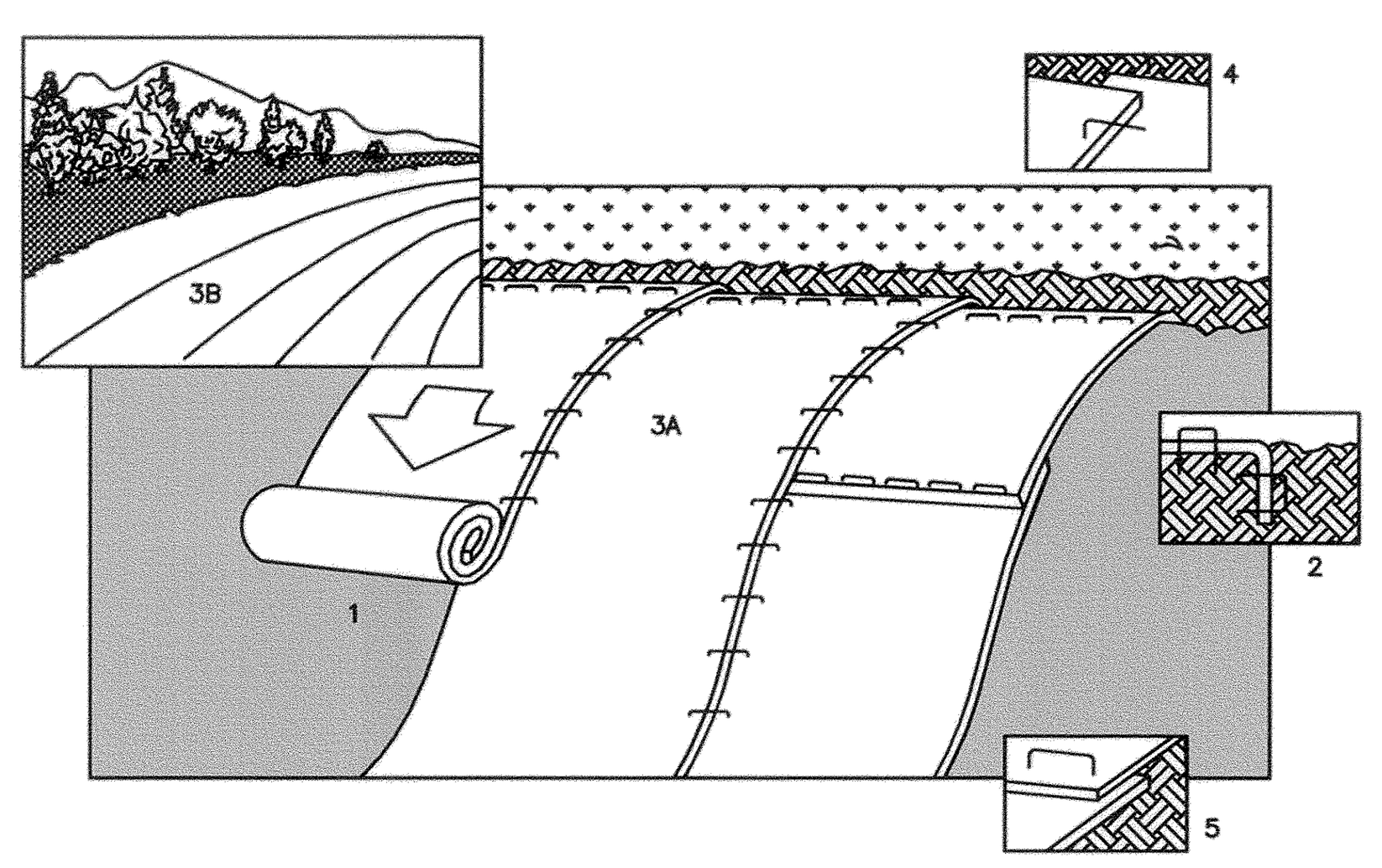

NOTES:

1. PREPARE SOIL BEFORE INSTALLING BLANKETS, INCLUDING APPLICATION OF LIME, FERTILIZER, AND SEED.
2. BEGIN AT THE TOP OF THE SLOPE BY ANCHORING THE BLANKET IN 4" DEEP X 6" WIDE TRENCH. BACKFILL AND COMPACT THE TRENCH AFTER STAPLING.
3. ROLL THE BLANKETS (A.) DOWN OR (B.) HORIZONTALLY ACROSS THE SLOPE.
4. THE EDGES OF PARALLEL BLANKETS MUST BE STAPLED WITH APPROXIMATELY 2" OVERLAP.
5. WHEN BLANKETS MUST BE SPLICED DOWN THE SLOPE, PLACE BLANKETS END OVER END (SHINGLE STYLE) WITH APPROXIMATELY 12" OVERLAP. STAPLE THROUGH OVERLAPPED AREA, APPROXIMATELY 12" APART.
6. EROSION CONTROL BLANKETS TO BE INSTALLED ON ALL 3:1 SLOPES WITH A MINIMUM OF 4 INCHES OF TOPSOIL.
7. SLOPE BLANKETS TO BE INSTALLED ON FILL SLOPES IMMEDIATELY AFTER EMBANKMENTS ARE ESTABLISHED. AT THE END OF EACH WORKING DAY, NO MORE THAN 10 FEET OF SOIL SHALL BE EXPOSED WITHOUT BLANKETS ON PERMANENT 3:1 FILL SLOPES. THE CONTRACTOR SHALL INSTALL COMPOST FILTER SOCK ON 3:1 SLOPES AT 50 FEET (MAX) INCREMENTS ALONG THE SLOPE LENGTH IN ACCORDANCE WITH THE EROSION AND SEDIMENTATION CONTROL PLANS AND DETAILS IMMEDIATELY AFTER EMBANKMENTS ARE ESTABLISHED.

NORTH AMERICAN GREEN
EROSION CONTROL *Products*
Guaranteed SOLUTIONS

14649 HIGHWAY 41 NORTH
EVANSVILLE, IN 47725
800–772–2040
www.nagreen.com

DOT SYSTEM™ STAPLE PATTERN GUIDE

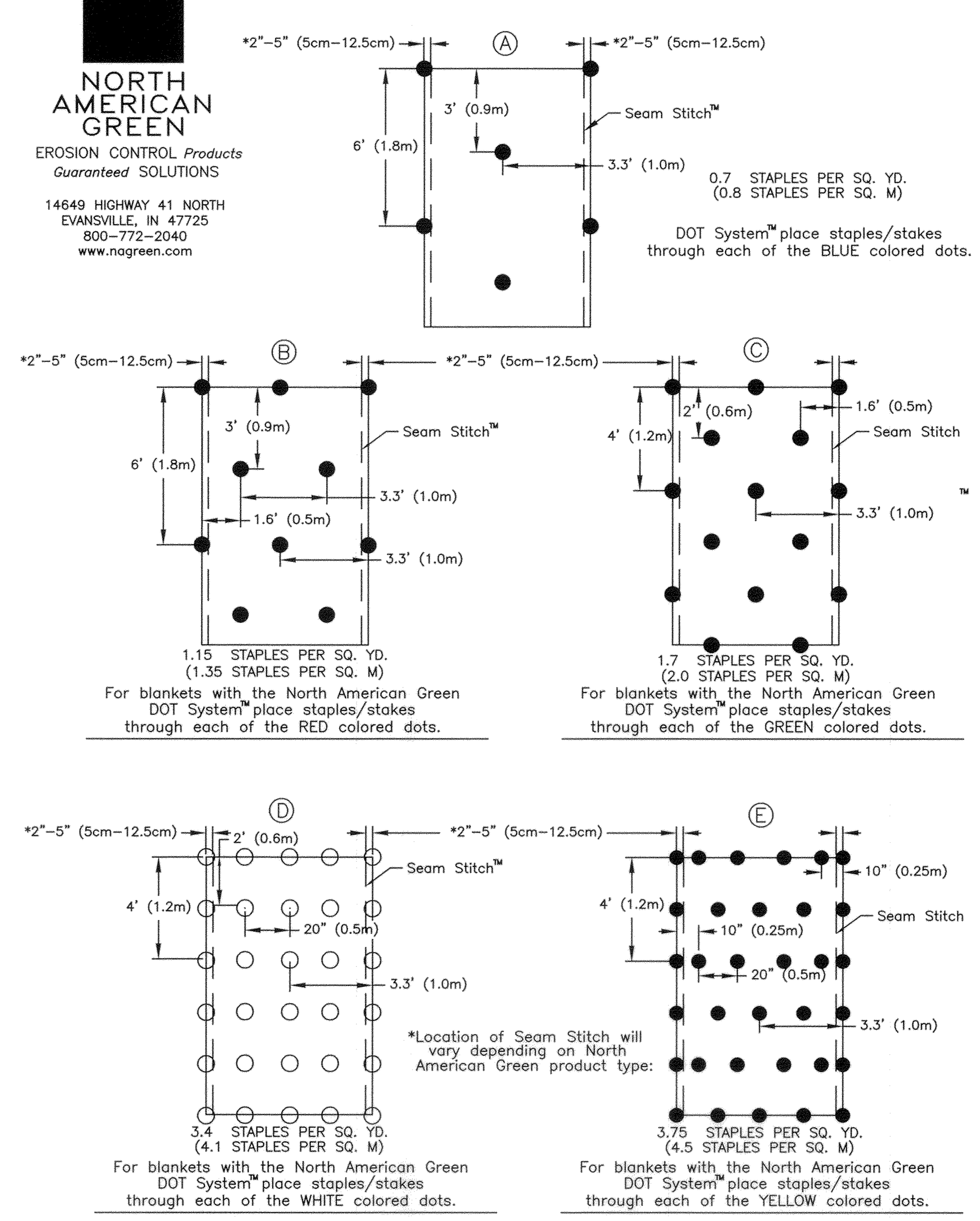

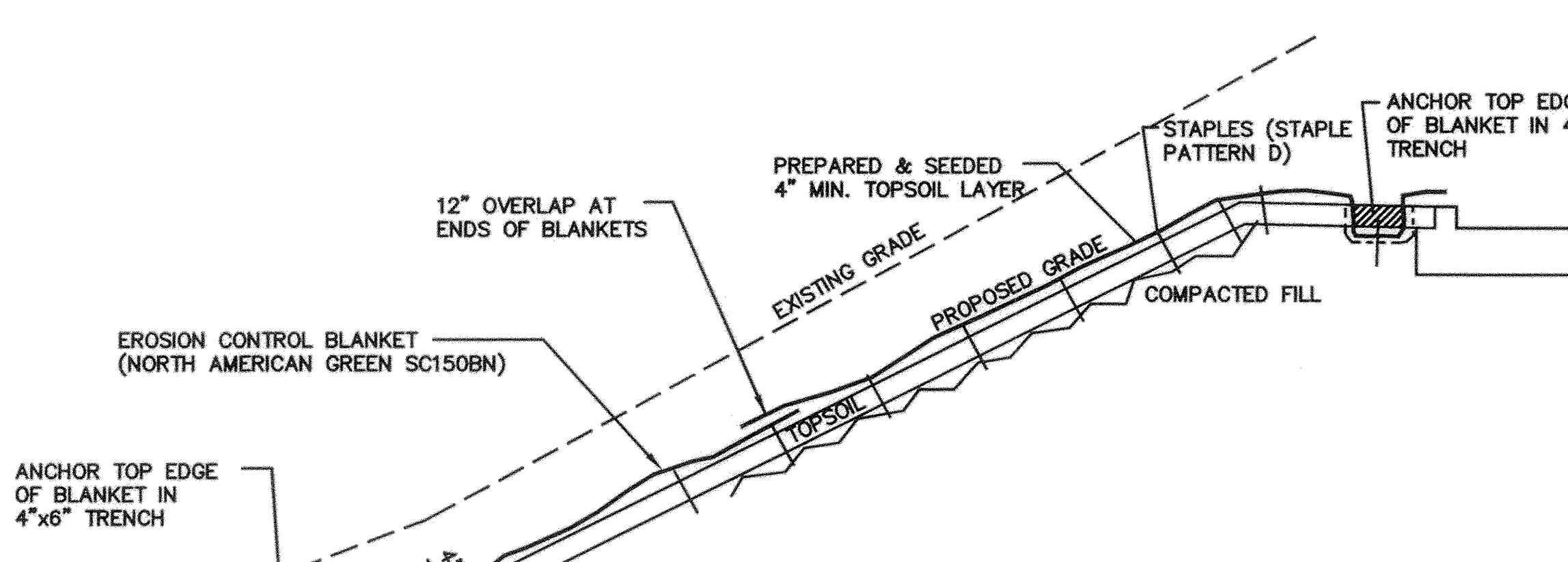

DETAIL 904
SLOPE EROSION CONTROL BLANKET

N.T.S.

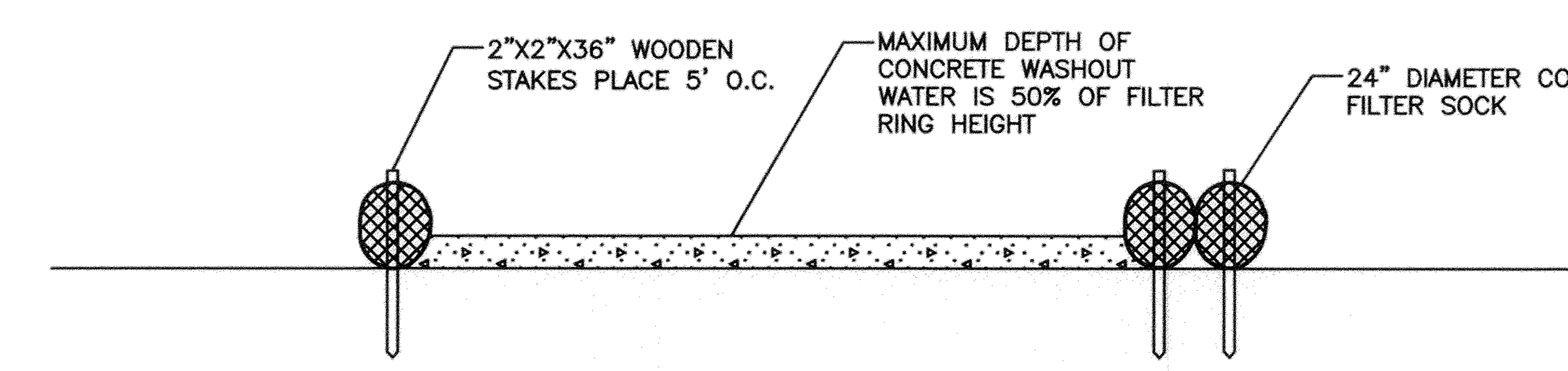

SECTION A-A'

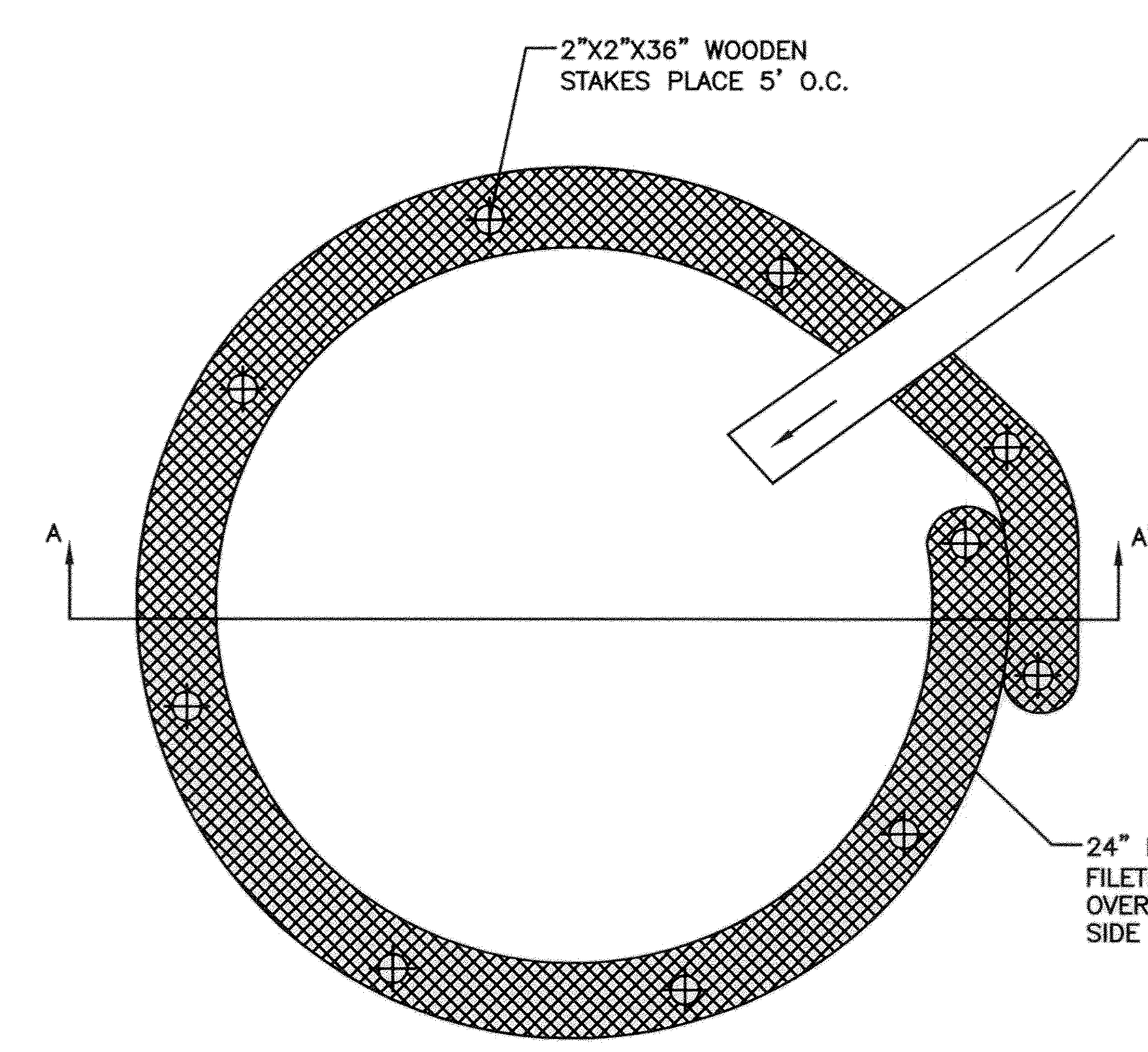

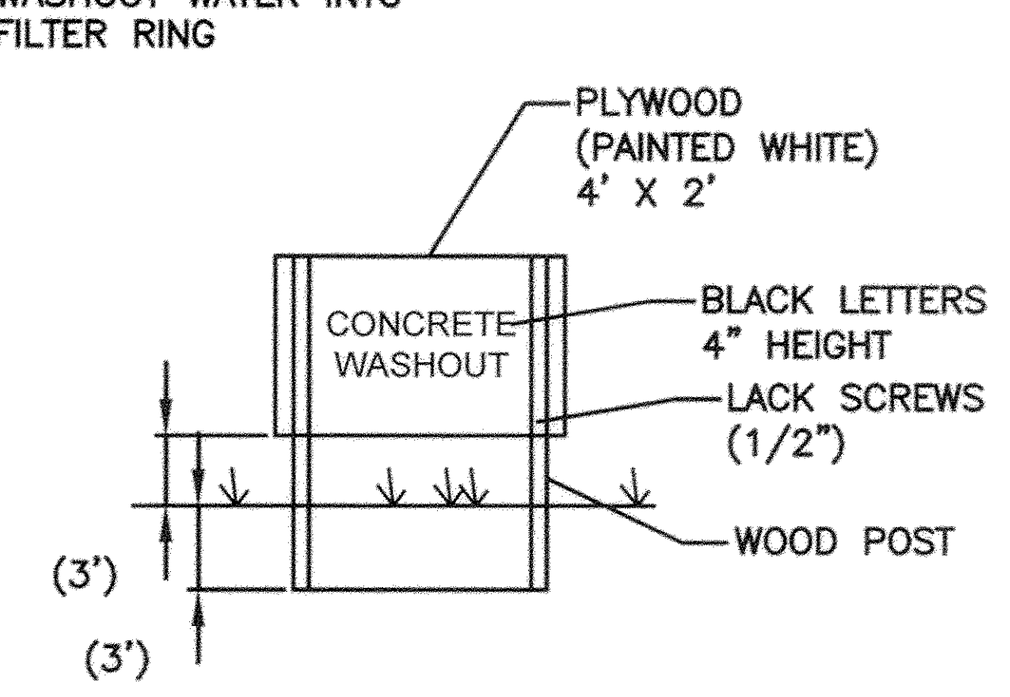

CONCRETE WASHOUT SIGN DETAIL (OR EQUIVALENT)

NOTES:

1. ACTUAL LAYOUT DETERMINED IN THE FIELD.
2. A SUITABLE IMPERVIOUS GEOMEMBRANE SHALL BE PLACED AT THE LOCATION OF THE WASHOUT PRIOR TO INSTALLING THE SOCKS.
3. THE CONCRETE WASHOUT SIGN SHALL BE INSTALLED WITHIN 30' OF THE TEMPORARY CONCRETE WASHOUT FACILITY.
4. INSTALL ON FLAT GRADE FOR OPTIMUM PERFORMANCE
5. 18" DIAMETER FILTER SOCK MAY BE STACKED ONTO DOUBLE 24" DIAMETER SOCKS IN PYRAMIDAL CONFIGURATION FOR ADDED HEIGHT.

DETAIL 905
TEMPORARY FILTER SOCK CONCRETE WASHOUT FACILITY

N.T.S.

PLAN BOOK	PAGE
365	32

*HAND SIGNATURE ON FILE

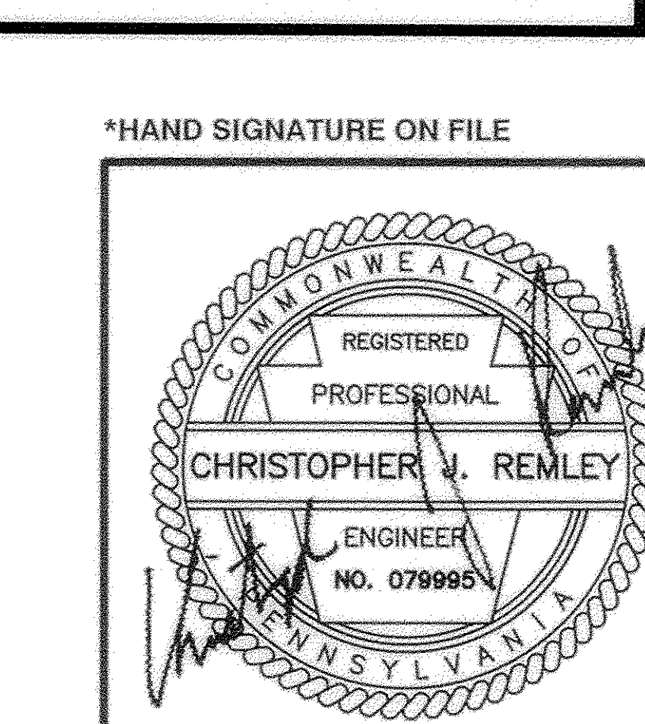

SUBMITTAL & REVISION RECORD

NO	DATE	DESCRIPTION
1	02/15/2017	LAND DEVELOPMENT SUBMISSION 01 TO MUDDY CREEK TOWNSHIP
2	02/21/2017	NPDES SUBMISSION 01 TO BUTLER COUNTY CONSERVATION DISTRICT
3	03/09/2017	RESPONSE TO COMMENTS FROM ENGINEER DATED 03/03/2017
4	03/29/2017	HART PRELIMINARY CIVIL SET SUBMISSION
5	03/30/2017	RESPONSE TO COMMENTS SUBMISSION TO BCCD DATED 3/14/2017
6	04/03/2017	FINAL LAND DEVELOPMENT PLAN SET SUBMISSION TO MUDDY CREEK TOWNSHIP
7	05/10/2017	RESPONSE TO COMMENTS FROM PTV DATED 05/01/2017 & FINAL SUBMISSION TO BCCD FOR NPDES PERMIT
8	07/13/2017	FINAL LAND DEVELOPMENT PLAN SET SUBMISSION TO MUDDY CREEK TOWNSHIP

CEC
Civil & Environmental Consultants, Inc.
333 Baldwin Road · Pittsburgh, PA 15205
412-429-2324 · 800-365-2324
www.cecinc.com

PTV XX, LLC
PORTERSVILLE DOLLAR GENERAL STORE
MUDDY CREEK TOWNSHIP
BUTLER COUNTY, PENNSYLVANIA

EROSION AND SEDIMENTATION CONTROL DETAILS

DATE:	FEBRUARY 15, 2017	DRAWN BY:	EJB/DMO
DWG SCALE:	AS SHOWN	CHECKED BY:	*CJR
PROJECT NO:	163-826	APPROVED BY:	*GPQ

DRAWING NO.: C902

SHEET 20 OF 21

P:\2016\163-826\-CADD\Dwg\CV01\163826-CV01-C901.dwg{C902} LS:(5/10/2017 – ebrice) – LP: 7/17/2017 4:07 PM

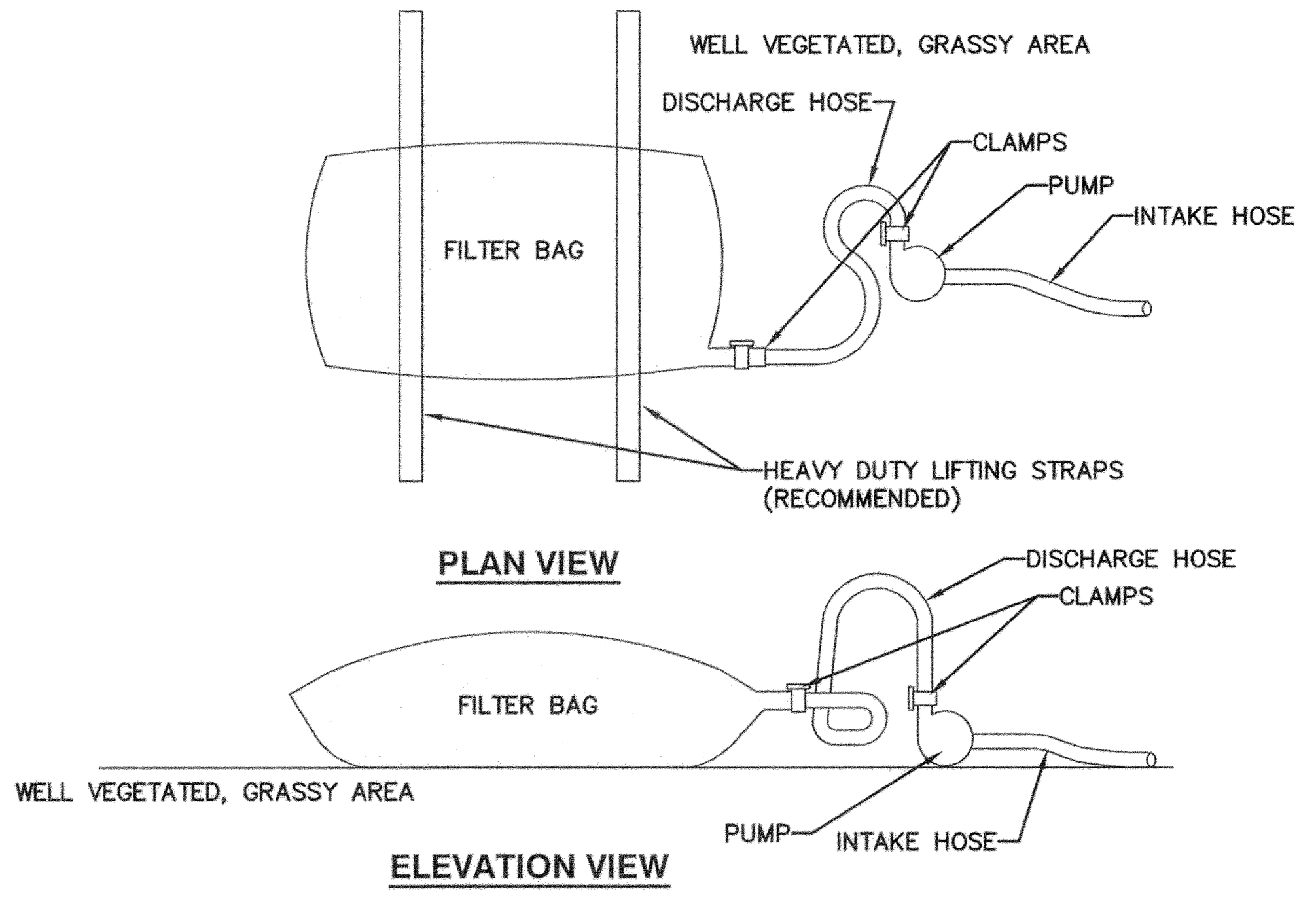

1. LOW VOLUME FILTER BAGS SHALL BE MADE FROM NON-WOVEN GEOTEXTILE MATERIAL SEWN WITH HIGH STRENGTH, DOUBLE STITCHED "J" TYPE SEAMS. THEY SHALL BE CAPABLE OF TRAPPING PARTICLES LARGER THAN 150 MICRONS. HIGH VOLUME FILTER BAGS SHALL BE MADE FROM WOVEN GEOTEXTILES THAT MEET THE FOLLOWING STANDARDS:

PROPERTY	TEST METHOD	MINIMUM STANDARD
AVG. WIDE WIDTH STRENGTH	ASTM D-4884	60 LB/IN
GRAB TENSILE	ASTM D-4632	205 LB
PUNCTURE	ASTM D-4833	110 LB
MULLEN BURST	ASTM D-3786	350 PSI
UV RESISTANCE	ASTM D-4355	70%
AOS % RETAINED	ASTM D-4751	80 SIEVE

2. A SUITABLE MEANS OF ACCESSING THE BAG WITH MACHINERY REQUIRED FOR DISPOSAL PURPOSES SHALL BE PROVIDED. FILTER BAGS SHALL BE REPLACED WHEN THEY BECOME 1/2 FULL OF SEDIMENT. SPARE BAGS SHALL BE KEPT AVAILABLE FOR REPLACEMENT OF THOSE THAT HAVE FAILED OR ARE FILLED. BAGS SHALL BE PLACED ON STRAPS TO FACILITATE REMOVAL UNLESS BAGS COME WITH LIFTING STRAPS ALREADY ATTACHED.
3. BAGS SHALL BE LOCATED IN WELL-VEGETATED (GRASSY) AREA, AND DISCHARGE ONTO STABLE, EROSION RESISTANT AREAS. WHERE THIS IS NOT POSSIBLE, A GEOTEXTILE UNDERLAYMENT AND FLOW PATH SHALL BE PROVIDED. BAGS MAY BE PLACED ON FILTER STONE TO INCREASE DISCHARGE CAPACITY. BAGS SHALL NOT BE PLACED ON SLOPES GREATER THAN 5%. FOR SLOPES EXCEEDING 5%, CLEAN ROCK OR OTHER NON-ERODIBLE AND NON-POLLUTING MATERIAL MAY BE PLACED UNDER THE BAG TO REDUCE SLOPE STEEPNESS.
4. NO DOWNSLOPE SEDIMENT BARRIER IS REQUIRED FOR MOST INSTALLATIONS. COMPOST BERM OR COMPOST FILTER SOCK SHALL BE INSTALLED BELOW BAGS LOCATED IN HQ OR EV WATERSHEDS, WITHIN 50 FEET OF ANY RECEIVING SURFACE WATER OR WHERE GRASSY AREA IS NOT AVAILABLE.
5. THE PUMP DISCHARGE HOSE SHALL BE INSERTED INTO THE BAGS IN THE MANNER SPECIFIED BY THE MANUFACTURER AND SECURELY CLAMPED. A PIECE OF PVC PIPE IS RECOMMENDED FOR THIS PURPOSE.
6. THE PUMPING RATE SHALL BE NO GREATER THAN 750 GPM OR 1/2 THE MAXIMUM SPECIFIED BY THE MANUFACTURER, WHICHEVER IS LESS. PUMP INTAKES SHALL BE FLOATING AND SCREENED.
7. FILTER BAGS SHALL BE INSPECTED DAILY. IF ANY PROBLEM IS DETECTED, PUMPING SHALL CEASE IMMEDIATELY AND NOT RESUME UNTIL THE PROBLEM IS CORRECTED.

DETAIL 906
PUMPED WATER FILTER BAG
N.T.S.

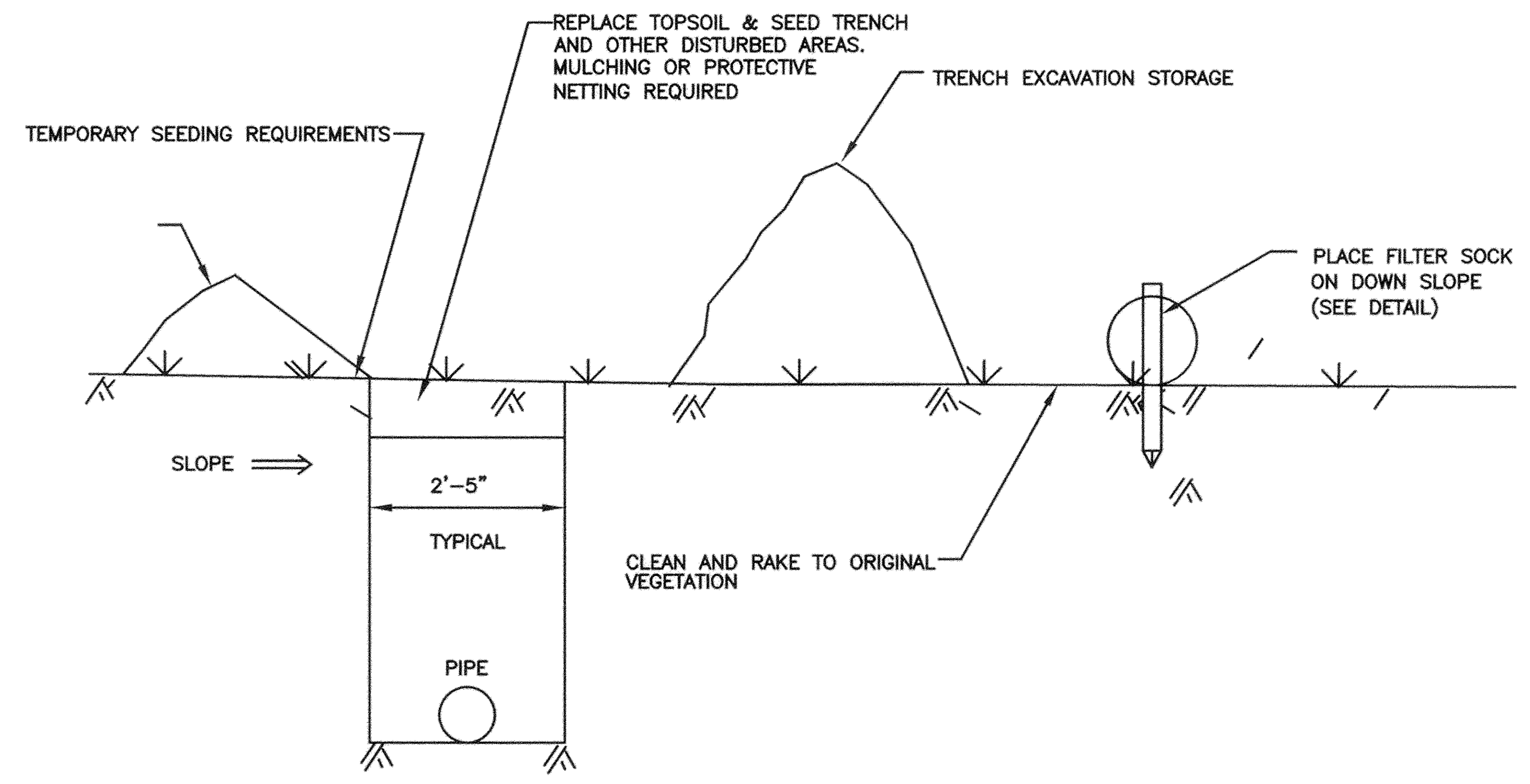

DETAIL 907
EROSION CONTROL MEASURES FOR UTILITY TRENCHES
N.T.S.

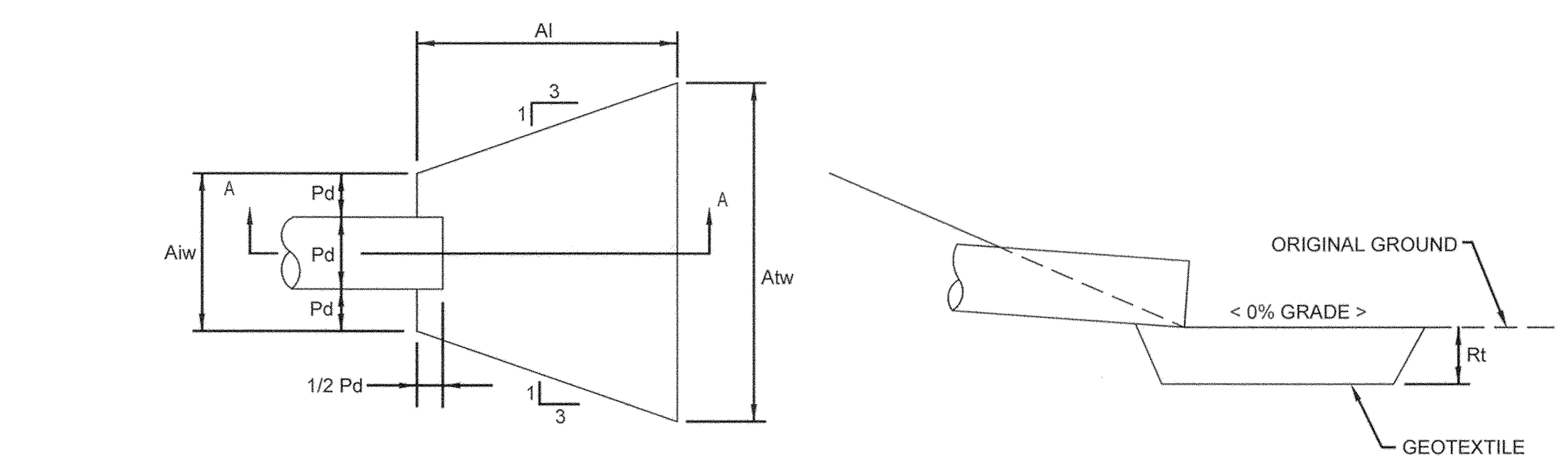

PLAN VIEW

SECTION A - A

APRON NO.	OUTLET NO.	PIPE DIA Pd (IN)	RIPRAP SIZE (R-_)	RIPRAP THICK Rt (IN)	APRON LENGTH Al (FT)	APRON INITIAL WIDTH Aiw (FT)	APRON TERMINAL WIDTH Atw (FT)
1	EW-1	12	R-4	8	15	6	12
2	EW-2	15	R-3	6	6	4	6

NOTES:

1. ALL APRONS SHALL BE CONSTRUCTED TO THE DIMENSIONS SHOWN. TERMINAL WIDTHS SHALL BE ADJUSTED AS NECESSARY TO MATCH RECEIVING CHANNELS.
2. ALL APRONS SHALL BE INSPECTED AT LEAST WEEKLY AND AFTER EACH RUNOFF EVENT. DISPLACED RIPRAP WITHIN THE APRON SHALL BE REPLACED IMMEDIATELY.
3. EXTEND RIPRAP ON BACK SIDE OF APRON AT LEAST ½ DEPTH OF PIPE ON BOTH SIDES TO PREVENT SCOUR AROUND THE PIPE.

DETAIL 908
RIPRAP OUTFALL APRON
N.T.S.

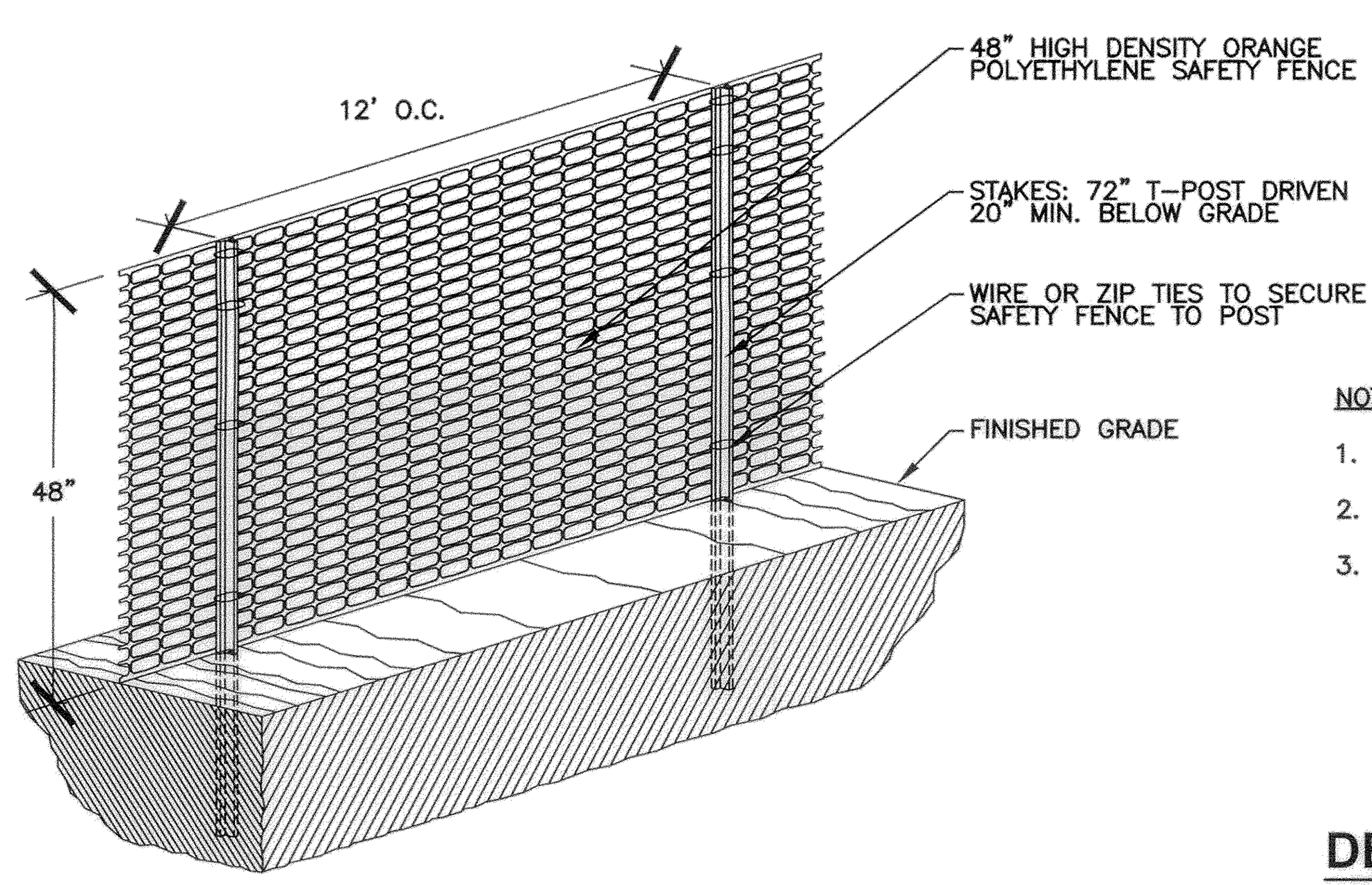

NOTES:

1. ALL SENSITIVE AREAS SHALL BE PROTECTED AS PER PLAN.
2. SAFETY FENCE SHOULD BE FASTENED SECURELY TO THE T-POSTS.
3. THE FENCING MUST REMAIN IN PLACE DURING ALL PHASES OF CONSTRUCTION; ANY CHANGE OF THE PROTECTIVE FENCING MUST BE APPROVED.

DETAIL 909
TEMPORARY ORANGE CONSTRUCTION FENCE
N.T.S.

STANDARD E&S PLAN NOTES

1. ALL EARTH DISTURBANCES, INCLUDING CLEARING AND GRUBBING AS WELL AS CUTS AND FILLS SHALL BE DONE IN ACCORDANCE WITH THE APPROVED E&S PLAN. A COPY OF THE APPROVED DRAWINGS (STAMPED, SIGNED AND DATED BY THE REVIEWING AGENCY) MUST BE AVAILABLE AT THE PROJECT SITE AT ALL TIMES. THE REVIEWING AGENCY SHALL BE NOTIFIED OF ANY CHANGES TO THE APPROVED PLAN PRIOR TO IMPLEMENTATION OF THOSE CHANGES. THE REVIEWING AGENCY MAY REQUIRE A WRITTEN SUBMITTAL OF THOSE CHANGES FOR REVIEW AND APPROVAL AT ITS DISCRETION.
2. AT LEAST 7 DAYS PRIOR TO STARTING ANY EARTH DISTURBANCE ACTIVITIES, INCLUDING CLEARING AND GRUBBING, THE OWNER AND/OR OPERATOR SHALL INVITE ALL CONTRACTORS, THE LANDOWNER, APPROPRIATE MUNICIPAL OFFICIALS, THE E&S PLAN PREPARER, THE PCSM PLAN PREPARER, THE LICENSED PROFESSIONAL RESPONSIBLE FOR OVERSIGHT OF CRITICAL STAGES OF IMPLEMENTATION OF THE PCSM PLAN, AND A REPRESENTATIVE FROM THE LOCAL CONSERVATION DISTRICT TO AN ON-SITE PRECONSTRUCTION MEETING.
3. THE CONTRACTOR MUST NOTIFY THE PENNSYLVANIA ONE CALL SYSTEM INC. AT 1-800-242-1776 FOR THE LOCATION OF EXISTING UNDERGROUND UTILITIES AT LEAST 3 DAYS PRIOR TO STARTING ANY EARTH DISTURBANCE ACTIVITIES, OR EXPANDING INTO AN AREA PREVIOUSLY UNMARKED.
4. ALL EARTH DISTURBANCE ACTIVITIES SHALL PROCEED IN ACCORDANCE WITH THE SEQUENCE PROVIDED ON THE PLAN DRAWINGS. DEVIATION FROM THAT SEQUENCE MUST BE APPROVED IN WRITING FROM THE LOCAL CONSERVATION DISTRICT OR BY THE DEPARTMENT PRIOR TO IMPLEMENTATION.
5. AREAS TO BE FILLED ARE TO BE CLEARED, GRUBBED, AND STRIPPED OF TOPSOIL TO REMOVE TREES, VEGETATION, ROOTS AND OTHER OBJECTIONABLE MATERIAL.
6. CLEARING, GRUBBING, AND TOPSOIL STRIPPING SHALL BE LIMITED TO THOSE AREAS DESCRIBED IN EACH STAGE OF THE CONSTRUCTION SEQUENCE. GENERAL SITE CLEARING, GRUBBING AND TOPSOIL STRIPPING MAY NOT COMMENCE IN ANY STAGE OR PHASE OF THE PROJECT UNTIL THE E&S BMPS SPECIFIED BY THE BMP SEQUENCE FOR THAT STAGE OR PHASE HAVE BEEN INSTALLED AND ARE FUNCTIONING AS DESCRIBED IN THIS E&S PLAN.
7. AT NO TIME SHALL CONSTRUCTION VEHICLES BE ALLOWED TO ENTER AREAS OUTSIDE THE LIMIT OF DISTURBANCE BOUNDARIES SHOWN ON THE PLAN MAPS. THESE AREAS MUST BE CLEARLY MARKED AND FENCED OFF BEFORE CLEARING AND GRUBBING OPERATIONS BEGIN.
8. TOPSOIL REQUIRED FOR THE ESTABLISHMENT OF VEGETATION SHALL BE STOCKPILED AT THE LOCATION(S) SHOWN ON THE PLAN MAPS(S) IN THE AMOUNT NECESSARY TO COMPLETE THE FINISH GRADING OF ALL EXPOSED AREAS THAT ARE TO BE STABILIZED BY VEGETATION. EACH STOCKPILE SHALL BE PROTECTED IN THE MANNER SHOWN ON THE PLAN DRAWINGS. STOCKPILE HEIGHTS SHALL NOT EXCEED 35 FEET. STOCKPILE SLOPES SHALL BE 2H:1V OR FLATTER.
9. IMMEDIATELY UPON DISCOVERING UNFORESEEN CIRCUMSTANCES POSING THE POTENTIAL FOR ACCELERATED EROSION AND/OR SEDIMENT POLLUTION, THE OPERATOR SHALL IMPLEMENT APPROPRIATE BEST MANAGEMENT PRACTICES TO MINIMIZE THE POTENTIAL FOR EROSION AND SEDIMENT POLLUTION AND NOTIFY THE LOCAL CONSERVATION DISTRICT AND/OR THE REGIONAL OFFICE OF THE DEPARTMENT.
10. ALL BUILDING MATERIALS AND WASTES SHALL BE REMOVED FROM THE SITE AND RECYCLED OR DISPOSED OF IN ACCORDANCE WITH THE DEPARTMENT'S SOLID WASTE MANAGEMENT REGULATIONS AT 25 PA. CODE 260.1 ET SEQ., 271.1, AND 287.1 ET. SEQ. NO BUILDING MATERIALS OR WASTES OR UNUSED BUILDING MATERIALS SHALL BE BURNED, BURIED, DUMPED, OR DISCHARGED AT THE SITE.
11. ALL OFF-SITE WASTE AND BORROW AREAS MUST HAVE AN E&S PLAN APPROVED BY THE LOCAL CONSERVATION DISTRICT OR THE DEPARTMENT FULLY IMPLEMENTED PRIOR TO BEING ACTIVATED.
12. THE CONTRACTOR IS RESPONSIBLE FOR ENSURING THAT ANY MATERIAL BROUGHT ON SITE IS CLEAN FILL. FORM FP-001 MUST BE RETAINED BY THE PROPERTY OWNER FOR ANY FILL MATERIAL AFFECTED BY A SPILL OR RELEASE OF A REGULATED SUBSTANCE BUT QUALIFYING AS CLEAN FILL DUE TO ANALYTICAL TESTING.
13. ALL PUMPING OF WATER FROM ANY WORK AREA SHALL BE DONE ACCORDING TO THE PROCEDURE DESCRIBED IN THIS PLAN, OVER UNDISTURBED VEGETATED AREAS.
14. UNTIL THE SITE IS STABILIZED, ALL EROSION AND SEDIMENT BMPS SHALL BE MAINTAINED PROPERLY. MAINTENANCE SHALL INCLUDE INSPECTIONS OF ALL EROSION AND SEDIMENT BMPS AFTER EACH RUNOFF EVENT AND ON A WEEKLY BASIS. ALL PREVENTATIVE AND REMEDIAL MAINTENANCE WORK, INCLUDING CLEAN OUT, REPAIR, REPLACEMENT, REGRADING, RESEEDING, REMULCHING AND RENETTING MUST BE PERFORMED IMMEDIATELY. IF THE E&S BMPS FAIL TO PERFORM AS EXPECTED, REPLACEMENT BMPS, OR MODIFICATIONS OF THOSE INSTALLED WILL BE REQUIRED.
15. A LOG SHOWING DATES THAT E&S BMPS WERE INSPECTED AS WELL AS ANY DEFICIENCIES FOUND AND THE DATE THEY WERE CORRECTED SHALL BE MAINTAINED ON THE SITE AND BE MADE AVAILABLE TO REGULATORY AGENCY OFFICIALS AT THE TIME OF INSPECTION.
16. SEDIMENT TRACKED ONTO ANY PUBLIC ROADWAY OR SIDEWALK SHALL BE RETURNED TO THE CONSTRUCTION SITE BY THE END OF EACH WORK DAY AND DISPOSED IN THE MANNER DESCRIBED IN THIS PLAN. IN NO CASE SHALL THE SEDIMENT BE WASHED, SHOVELED, OR SWEPT INTO ANY ROADSIDE DITCH, STORM SEWER, OR SURFACE WATER.
17. ALL SEDIMENT REMOVED FROM BMPS SHALL BE DISPOSED OF IN THE MANNER DESCRIBED ON THE PLAN DRAWINGS.
18. AREAS WHICH ARE TO BE TOPSOILED SHALL BE SCARIFIED TO A MINIMUM DEPTH OF 3 TO 5 INCHES -- 6 TO 12 INCHES ON COMPACTED SOILS -- PRIOR TO PLACEMENT OF TOPSOIL. AREAS TO BE VEGETATED SHALL HAVE A MINIMUM 4 INCHES OF TOPSOIL IN PLACE PRIOR TO SEEDING AND MULCHING. FILL OUTSLOPES SHALL HAVE A MINIMUM OF 2 INCHES OF TOPSOIL.
19. ALL FILLS SHALL BE COMPACTED AS REQUIRED TO REDUCE EROSION, SLIPPAGE, SETTLEMENT, SUBSIDENCE OR OTHER RELATED PROBLEMS. FILL INTENDED TO SUPPORT BUILDINGS, STRUCTURES AND CONDUITS, ETC. SHALL BE COMPACTED IN ACCORDANCE WITH LOCAL REQUIREMENTS OR CODES.
20. ALL EARTHEN FILLS SHALL BE PLACED IN COMPACTED LAYERS NOT TO EXCEED 9 INCHES IN THICKNESS.
21. FILL MATERIALS SHALL BE FREE OF FROZEN PARTICLES, BRUSH, ROOTS, SOD, OR OTHER FOREIGN OR OBJECTIONABLE MATERIALS THAT WOULD INTERFERE WITH OR PREVENT CONSTRUCTION OF SATISFACTORY FILLS.
22. FROZEN MATERIALS OR SOFT, MUCKY, OR HIGHLY COMPRESSIBLE MATERIALS SHALL NOT BE INCORPORATED INTO FILLS.
23. FILL SHALL NOT BE PLACED ON SATURATED OR FROZEN SURFACES.
24. SEEPS OR SPRINGS ENCOUNTERED DURING CONSTRUCTION SHALL BE HANDLED IN ACCORDANCE WITH THE STANDARD AND SPECIFICATION FOR SUBSURFACE DRAIN OR OTHER APPROVED METHOD. CONTACT PROJECT ENGINEER IF THIS SITUATION ARISES.
25. ALL GRADED AREAS SHALL BE PERMANENTLY STABILIZED IMMEDIATELY UPON REACHING FINISHED GRADE. CUT SLOPES IN COMPETENT BEDROCK AND ROCK FILLS NEED NOT BE VEGETATED. SEEDED AREAS WITHIN 50 FEET OF A SURFACE WATER, OR AS OTHERWISE SHOWN ON THE PLAN DRAWINGS, SHALL BE BLANKETED ACCORDING TO THE STANDARDS OF THIS PLAN.
26. IMMEDIATELY AFTER EARTH DISTURBANCE ACTIVITIES CEASE IN ANY AREA OR SUBAREA OF THE PROJECT, THE OPERATOR SHALL STABILIZE ALL DISTURBED AREAS. DURING NON-GERMINATING MONTHS, MULCH OR PROTECTIVE BLANKETING SHALL BE APPLIED AS DESCRIBED IN THE PLAN. AREAS NOT AT FINISHED GRADE, WHICH WILL BE REACTIVATED WITHIN 1 YEAR, MAY BE STABILIZED IN ACCORDANCE WITH THE TEMPORARY STABILIZATION SPECIFICATIONS. THOSE AREAS WHICH WILL NOT BE REACTIVATED WITHIN 1 YEAR SHALL BE STABILIZED IN ACCORDANCE WITH THE PERMANENT STABILIZATION SPECIFICATIONS.
27. PERMANENT STABILIZATION IS DEFINED AS A MINIMUM UNIFORM, PERENNIAL 70% VEGETATIVE COVER OR OTHER PERMANENT NON-VEGETATIVE COVER WITH A DENSITY SUFFICIENT TO RESIST ACCELERATED EROSION. CUT AND FILL SLOPES SHALL BE CAPABLE OF RESISTING FAILURE DUE TO SLUMPING, SLIDING, OR OTHER MOVEMENTS.
28. E&S BMPS SHALL REMAIN FUNCTIONAL AS SUCH UNTIL ALL AREAS TRIBUTARY TO THEM ARE PERMANENTLY STABILIZED OR UNTIL THEY ARE REPLACED BY ANOTHER BMP APPROVED BY THE LOCAL CONSERVATION DISTRICT OR THE DEPARTMENT.
29. UPON COMPLETION OF ALL EARTH DISTURBANCE ACTIVITIES AND PERMANENT STABILIZATION OF ALL DISTURBED AREAS, THE OWNER AND/OR OPERATOR SHALL CONTACT THE LOCAL CONSERVATION DISTRICT FOR AN INSPECTION PRIOR TO REMOVAL/CONVERSION OF THE E&S BMPS.
30. AFTER FINAL SITE STABILIZATION HAS BEEN ACHIEVED, TEMPORARY EROSION AND SEDIMENT BMPS MUST BE REMOVED OR CONVERTED TO PERMANENT POST CONSTRUCTION STORMWATER MANAGEMENT BMPS. AREAS DISTURBED DURING REMOVAL OR CONVERSION OF THE BMPS SHALL BE STABILIZED IMMEDIATELY. IN ORDER TO ENSURE RAPID REVEGETATION OF DISTURBED AREAS, SUCH REMOVAL/CONVERSIONS ARE TO BE DONE ONLY DURING THE GERMINATING SEASON.
31. UPON COMPLETION OF ALL EARTH DISTURBANCE ACTIVITIES AND PERMANENT STABILIZATION OF ALL DISTURBED AREAS, THE OWNER AND/OR OPERATOR SHALL CONTACT THE LOCAL CONSERVATION DISTRICT TO SCHEDULE A FINAL INSPECTION.
32. FAILURE TO CORRECTLY INSTALL E&S BMPS, FAILURE TO PREVENT SEDIMENT-LADEN RUNOFF FROM LEAVING THE CONSTRUCTION SITE, OR FAILURE TO TAKE IMMEDIATE CORRECTIVE ACTION TO RESOLVE FAILURE, OR INEFFECTIVENESS, OF E&S BMPS MAY RESULT IN ADMINISTRATIVE, CIVIL, AND/OR CRIMINAL PENALTIES BEING INSTITUTED BY THE DEPARTMENT AS DEFINED IN SECTION 602 OF THE PENNSYLVANIA CLEAN STREAMS LAW. THE CLEAN STREAMS LAW PROVIDES FOR UP TO $10,000 PER DAY IN CIVIL PENALTIES, UP TO $10,000 IN SUMMARY CRIMINAL PENALTIES, AND UP TO $25,000 IN MISDEMEANOR CRIMINAL PENALTIES FOR EACH VIOLATION.
33. IF A SPILL OR RELEASE OF A REGULATED SUBSTANCE OCCURS ON-SITE AND CONTAMINATES THE SOIL, IT IS THE RESPONSIBILITY OF THE CONTRACTOR TO TEST THE SOIL TO DETERMINE IF IT QUALIFIES AS CLEAN FILL. TESTING SHOULD BE PERFORMED IN ACCORDANCE WITH PADEP'S POLICY ON "MANAGEMENT OF FILL". SEE BELOW DEFINITIONS FOR CLEAN FILL AND ENVIRONMENTAL DUE DILIGENCE.
34. CLEAN FILL: UNCONTAMINATED, NON-WATER SOLUBLE, NON-DECOMPOSABLE, INERT, SOLID MATERIAL. THE TERM INCLUDES SOIL, ROCK, STONE, DREDGED MATERIAL, USED ASPHALT, AND BRICK, BLOCK OR CONCRETE FROM CONSTRUCTION AND DEMOLITION ACTIVITIES THAT IS SEPARATE FROM OTHER WASTE AND IS RECOGNIZABLE AS SUCH. THE TERM DOES NOT INCLUDE MATERIALS PLACED IN OR ON THE WATERS OF THE COMMONWEALTH UNLESS OTHERWISE AUTHORIZED. (THE TERM "USED ASPHALT" DOES NOT INCLUDE MILLED ASPHALT OR ASPHALT THAT HAS BEEN PROCESSED FOR RE-USE.)
35. ENVIRONMENTAL DUE DILIGENCE: INVESTIGATIVE TECHNIQUES INCLUDING, BUT NOT LIMITED TO, VISUAL PROPERTY INSPECTIONS, ELECTRONIC DATA BASE SEARCHES, REVIEW OF PROPERTY OWNERSHIP, REVIEW OF PROPERTY USE HISTORY, SANBORN MAPS, ENVIRONMENTAL QUESTIONNAIRES, TRANSACTION SCREENS, ANALYTICAL TESTING, ENVIRONMENTAL ASSESSMENTS OR AUDITS. IF THE FILL MAY HAVE BEEN AFFECTED BY A SPILL OR RELEASE OF A REGULATED SUBSTANCE, IT MUST BE TESTED TO DETERMINE IF IT QUALIFIES AS CLEAN FILL.
36. MINIMIZE SOIL COMPACTION TO THE FULLEST EXTENT POSSIBLE IN ALL PROPOSED UNIMPROVED AREAS OTHER THAN THE SOIL STOCKPILE AREAS WHERE COMPACTION IS NEEDED FOR SOIL AND SLOPE STABILIZATION.

NATURALLY OCCURRING GEOLOGICAL FORMATIONS

A REVIEW OF THE INFORMATION CONTAINED ON THE UNITED STATES DEPARTMENT OF INTERIOR GEOLOGIC SURVEY (USGS) WEB SITE INDICATES THAT THE BEDROCK UNITS UNDERLYING THE PROJECT SITE BELONG TO THE ALLEGHENY FORMATION. THIS FORMATION IS PENNSYLVANIAN IN AGE AND INCLUDES CYCLIC SEQUENCES OF SANDSTONE, SHALE, LIMESTONE, CLAY, AND COAL. THE FORMATION INCLUDES CLAY DEPOSITS AND THE VANPORT LIMESTONE AS WELL AS COMMERCIALLY VALUABLE COAL OF THE FREEPORT, KITTANNING, AND BROOKVILLE-CLARION SEAMS. THE BASE OF THE FORMATION IS AT THE BOTTOM OF THE BROOKVILLE-CLARION COAL SEAM.

AVAILABLE MINING RECORDS REVIEWED FOR THIS SITE INCLUDED USGS HISTORICAL TOPOGRAPHIC MAPS, THE PENNSYLVANIA GEOLOGICAL SURVEY (PAGS) "COAL RESOURCES OF BUTLER COUNTY PART 1. COAL. THE COAL STATUS REPORT FROM THE PADEP DISTRICT MINING OPERATIONS INDICATES THE SITE IS LOCATED ON AN UNMINED SECTION OF THE LOWER FREEPORT COAL SEAM WITH A REPORTED ELEVATION OF EL 1340 FEET, NAVD. THE REPORT STATES THE AREA APPROXIMATELY 820 FEET SOUTH OF THE PROPERTY HAS BEEN SURFACE MINED. USGS 7.5-MINUTE QUADRANGLE AND PAGS 1985 MAPPING INDICATES SURFACE MINING AT ROUGHLY 800 FEET WEST AND SOUTHWEST OF THE PROPERTY.

NEITHER PAGS NOR THE PADEP/PSU WEBSITE MAPPING INDICATE DEEP MINING BELOW THE PROPERTY.

ACCORDING TO THE GEOTECHNICAL ENGINEERING SERVICES REPORT PREPARED BY PROFESSIONAL SERVICE INDUSTRIES, DATED 01/03/2017, THERE ARE NO KNOWN POTENTIAL'S FROM GEOLOGIC FORMATIONS OR SOIL CONDITIONS TO CAUSE POLLUTION DURING EARTH DISTURBANCE ACTIVITIES. DUE TO LIMITING LAYERS TO BEDROCK, INFILTRATION TESTING HAS NOT BEEN COMPLETED.

MEASURES PROVIDED TO MITIGATE THERMAL IMPACTS

BECAUSE THE DEVELOPMENT WILL BE INCREASING THE AMOUNT OF IMPERVIOUS SURFACES FROM PRE-DEVELOPMENT CONDITIONS, RUNOFF WILL HAVE A DECREASED OPPORTUNITY TO FLOW THROUGH VEGETATED AREAS. TO COUNTER THIS, RUNOFF FROM PROPOSED IMPERVIOUS SURFACES INCLUDING ROOF RUNOFF, PARKING LOT, AND DRIVEWAY RUNOFF WILL BE COLLECTED IN THE BIO-RETENTION BASIN WHICH ALLOWS THE RUNOFF TO COOL WITHIN THE BIO-RETENTION SOIL MIX PRIOR TO BEING DISCHARGED. THE DISCHARGE FROM THE BIO-RETENTION BASIN WILL BE DIRECTED TO AN EXISTING STORM SEWER INLET AND CULVERT WHERE RUNOFF WILL BE COOLED BEFORE REACHING THE WATERS OF THE COMMONWEALTH. THESE CONDITIONS FURTHER OFFSET ANY POTENTIAL THERMAL IMPACTS.

INDIVIDUAL BMP CONSTRUCTION SEQUENCE

1. SEE STEPS 1-11 IN THE EROSION AND SEDIMENTATION CONTROL CONSTRUCTION SEQUENCE FOR PRIOR CONSTRUCTION STEPS.
2. CONTACT CEC PRIOR TO BEGINNING CONSTRUCTION OF THE BIO-RETENTION BASIN. A LICENSED PROFESSIONAL IN THE COMMONWEALTH OF PENNSYLVANIA MUST BE PRESENT ONSITE TO OBSERVE THE CRITICAL STAGES OF CONSTRUCTION FOR THE BIO-RETENTION BASIN.
3. EXCAVATE TO THE DIMENSIONS AND ELEVATIONS REQUIRED FOR THE BIO-RETENTION BASIN. SMOOTH IRREGULARITIES IN THE EXCAVATION AND CLEAR ANY LARGE ROCKS OR DEBRIS FROM THE BOTTOM OF THE BED. TAKE CARE WHILE EXCAVATING TO AVOID COMPACTING THE UNDERLYING SOILS WHERE INFILTRATION MAY OCCUR. MEASURES SHOULD BE TAKEN TO PREVENT WATER AND SEDIMENT FROM ENTERING THE EXCAVATED AREA.
4. INSTALL OUTLET STRUCTURE AND ASSOCIATED STORMWATER CONVEYANCE PIPES AND CATCH BASINS. ANY DAMAGES TO EXISTING PAVEMENT, DRAINAGE STRUCTURES, AND CONVEYANCE PIPES INVOLVED WITH INSTALLING THE OUTLET STRUCTURE SHALL BE REPLACED IN KIND.
5. INSTALL UNDERDRAIN AS SHOWN ON THE PLANS AN IN ACCORDANCE WITH THE STANDARD DETAIL. PLACE SUBSURFACE DRAINAGE GEOTEXTILE ON THE BOTTOM AND SIDES OF THE EXCAVATED AREA SUCH THAT NATIVE SOILS DO NOT MIGRATE INTO THE STONE BEDDING.
6. INSTALL BIO-RETENTION SOIL MIX AS DEPICTED IN THE PLANS.

PLAN BOOK	PAGE
365	33

*HAND SIGNATURE ON FILE

COMMONWEALTH OF PENNSYLVANIA REGISTERED PROFESSIONAL CHRISTOPHER J. REMLEY ENGINEER NO. 079995

SUBMITTAL & REVISION RECORD

NO	DATE	DESCRIPTION
1	02/15/2017	LAND DEVELOPMENT SUBMISSION 01 TO MUDDY CREEK TOWNSHIP
2	02/21/2017	NPDES SUBMISSION 01 TO BUTLER COUNTY CONSERVATION DISTRICT
3	03/09/2017	RESPONSE TO COMMENTS FROM ENGINEER DATED 03/03/2017
4	03/29/2017	HART PRELIMINARY CIVIL SET SUBMISSION
5	03/30/2017	RESPONSE TO COMMENTS SUBMISSION TO BCCD DATED 3/14/2017
6	04/03/2017	FINAL LAND DEVELOPMENT PLAN SET SUBMISSION TO MUDDY CREEK TOWNSHIP
7	05/10/2017	RESPONSE TO COMMENTS FROM PTV DATED 05/01/2017 & FINAL SUBMISSION TO BCCD FOR NPDES PERMIT
8	07/13/2017	FINAL LAND DEVELOPMENT PLAN SET SUBMISSION TO MUDDY CREEK TOWNSHIP

Civil & Environmental Consultants, Inc.
333 Baldwin Road · Pittsburgh, PA 15205
412-429-2324 · 800-365-2324
www.cecinc.com

PTV XX, LLC
PORTERSVILLE DOLLAR GENERAL STORE
MUDDY CREEK TOWNSHIP
BUTLER COUNTY, PENNSYLVANIA

EROSION AND SEDIMENTATION CONTROL DETAILS AND NOTES

DATE:	FEBRUARY 15, 2017	DRAWN BY:	EJB/DMO
DWG SCALE:	AS SHOWN	CHECKED BY:	*CJR
PROJECT NO:	163-826	APPROVED BY:	*GPQ

DRAWING NO.: C903

SHEET 21 OF 21

P:\2016\163-826\-CADD\Dwg\CV01\163826-CV01-C901.dwg{C903} LS:(5/10/2017 - ebrice) - LP: 7/17/2017 4:07 PM

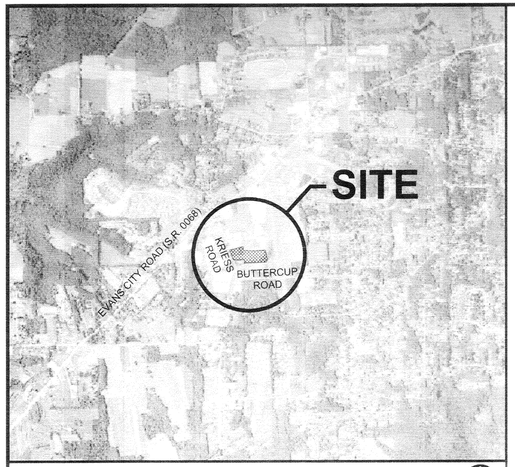

SITE LOCATION MAP
SCALE: 1" = 2000'

NOTES:

1. THE UNDERGROUND UTILITIES SHOWN HEREON HAVE NOT BEEN PHYSICALLY LOCATED BY THE SURVEYOR, HOWEVER, THE INFORMATION WAS OBTAINED FROM EXISTING PLANS AND SURFACE FACILITIES. THE GATEWAY ENGINEERS, INC. MAKES NO GUARANTEE THAT THE UNDERGROUND UTILITIES SHOWN COMPRISE ALL SUCH UTILITIES IN THE AREA, EITHER IN SERVICE OR ABANDONED. THE GATEWAY ENGINEERS, INC. DOES NOT WARRANT THAT THE UNDERGROUND UTILITIES SHOWN ARE IN THE EXACT LOCATION INDICATED ALTHOUGH THEY ARE SHOWN AS ACCURATELY AS POSSIBLE FROM THE INFORMATION AVAILABLE.
2. THE PURPOSE OF THIS PLAN IS TO CONSOLIDATE EXISTING PARCELS 120-3F47-2AAD, 120-3F47-2AADA, AND 120-3F47-2AT INTO ONE CONSOLIDATED PARCEL.
3. THE PROPOSED USE OF THE LAND WILL BE COMMERCIAL SELF-STORAGE.
4. NO CHANGES TO SANITARY SEWER SERVICE ARE BEING PROPOSED AS PART OF THIS PLAN.

LOT AREA SUMMARY:

TAX PARCEL 120-3F47-2AAD:	76,043 SF	OR	1.746 ACRES
TAX PARCEL 120-3F47-2AADA:	282 SF	OR	0.006 ACRES
TAX PARCEL 120-3F47-2AT:	252,532 SF	OR	5.796 ACRES
SUB-TOTAL CONSOLIDATED AREA:	328,857 SF	OR	7.550 ACRES
KRIESS ROAD RIGHT-OF-WAY DEDICATION:	7,609 SF	OR	0.175 ACRES
TOTAL CONSOLIDATED AREA (LOT 1):	321,248 SF	OR	7.375 ACRES

PROPERTY OWNER / ADDRESS:
CHRISTINE E. MUZZANA, OR HER SUCCESSOR, TRUSTEE OF THE CHRISTINE E. MUZZANA REVOCABLE TRUST

CHRISTINE E. MUZZANA, TRUSTEE OF THE CHRISTINE E. MUZZANA REVOCABLE TRUST
124 PARK ROAD
BEAVER FALLS, PA 15010

LEGEND

T	- TOP OF CASTING
F	- FLOW LINE
EX.	- EXISTING
CPP	- CORRUGATED PLASTIC PIPE
PVC	- POLYVINYL CHLORIDE PIPE
SF	- SQUARE FOOT
P.B.V.	- PLAN BOOK VOLUME
PG.	- PAGE
	- EXISTING INLET
	- EXISTING SEWER PIPE
	- EXISTING UTILITY LINE BREAKLINE
	- UTILITY LINE EXTENDS UNKNOWN DISTANCE)
	- EDGE OF BITUMINOUS ROAD

GRAPHIC SCALE
0 20 40 80 160
(IN FEET)
1 inch = 40 ft.

OWNER'S ADOPTION

KNOW ALL MEN BY THESE PRESENTS, THAT I, CHRISTINE MUZZANA OF CONNOQUENESSING TOWNSHIP, COUNTY OF BUTLER, COMMONWEALTH OF PENNSYLVANIA, FOR MYSELF, MY HEIRS, EXECUTORS, ADMINISTRATORS AND ASSIGNS, DO HEREBY ADOPT THIS AS MY PLAN OF CONSOLIDATION OF OUR, PROPERTY, SITUATE IN THE TOWNSHIP OF CONNOQUENESSING, COUNTY OF BUTLER AND COMMONWEALTH OF PENNSYLVANIA, AND FOR DIVERS ADVANTAGES ACCRUING TO US, DO HEREBY DEDICATE FOR PUBLIC HIGHWAYS SHOWN UPON THE PLAN, WITH THE SAME FORCE AND EFFECT AS IF THE SAME HAD BEEN OPENED THROUGH LEGAL PROCEEDINGS, AND IN CONSIDERATION OF THE APPROVAL OF SAID PLAN AND ANY FUTURE ACCEPTANCE OF SAID PUBLIC HIGHWAYS, RIGHTS-OF-WAY AND EASEMENTS BY SAID COUNTY OF BUTLER AND TOWNSHIP OF CONNOQUENESSING. I HEREBY AGREE TO, AND BY THESE PRESENTS DO RELEASE AND FOREVER DISCHARGE SAID TOWNSHIP OF CONNOQUENESSING, COUNTY OF BUTLER AND COMMONWEALTH OF PENNSYLVANIA, THEIR SUCCESSORS OR ASSIGNS, FROM ANY LIABILITY FOR DAMAGES ARISING AND TO ARISE FROM THE APPROPRIATION OF SAID GROUND FOR PUBLIC HIGHWAYS, AND OTHER PUBLIC USES, AND THE PHYSICAL GRADING THEREOF TO ANY GRADES THAT MAY BE ESTABLISHED. THE DEDICATION AND RELEASE SHALL BE BINDING UPON CHRISTINE MUZZANA, MY HEIRS, EXECUTORS, ADMINISTRATORS AND ASSIGNS AND PURCHASERS OF LOTS IN THIS PLAN. IN WITNESS WHEREOF, WE HEREUNTO SET OUR HANDS AND SEALS THIS 14 DAY OF August, 2017.

ATTEST:
Elena H. Gomola — Christine Muzzana
NOTARY PUBLIC — CHRISTINE MUZZANA

ACKNOWLEDGMENT

COMMONWEALTH OF PENNSYLVANIA:
COUNTY OF BUTLER:

BEFORE ME, THE SUBSCRIBER, A NOTARY PUBLIC IN AND FOR SAID COUNTY AND STATE, PERSONALLY APPEARED THE ABOVE NAMED CHRISTINE MUZZANA, OWNER OF THE REAL ESTATE SHOWN HEREON, AND ACKNOWLEDGED THE FOREGOING RELEASE AND DEDICATION AND PLAN TO BE THEIR ACT AND DEED, AND DESIRED AND SAME TO BE RECORDED AS SUCH.

WITNESS MY HAND AND NOTARIAL SEAL THIS 14 DAY OF August 20 17

Elena H. Gomola
NOTARY PUBLIC

COMMONWEALTH OF PENNSYLVANIA
NOTARIAL SEAL
ELENA H. GOMOLA, Notary Public
Butler City, Butler County
My Commission Expires March 12, 2018

OWNER'S ACCEPTANCE OF RESPONSIBILITY FOR PROVIDING STORMWATER DRAINAGE FACILITIES AND CONTROL OF STORMWATER DRAINAGE

KNOW ALL MEN BY THESE PRESENTS, THAT I, CHRISTINE MUZZANA OF THE TOWNSHIP OF CONNOQUENESSING, COUNTY OF BUTLER, COMMONWEALTH OF PENNSYLVANIA, FOR MYSELF, MY HEIRS, EXECUTORS, ADMINISTRATORS AND ASSIGNS, AND FOR MY GRANTEES AND THEIR SUBSEQUENT PURCHASERS, DO HEREBY ACCEPT FULL AND COMPLETE RESPONSIBILITY, LIABILITY, EXPENSE AND PROVISION OF FACILITIES FOR THE CONTROL OF STORM WATER DRAINAGE OVER, ACROSS AND THROUGH THIS SUBDIVISION OF LAND UNTIL SUCH TIME AS WE, OUR HEIRS, EXECUTORS, ADMINISTRATORS AND ASSIGNS CONSTRUCT STORM WATER DRAINAGE FACILITIES IN ACCORDANCE WITH TOWNSHIP SPECIFICATIONS AND REQUIREMENTS AND THE SAME IS OFFICIALLY ACCEPTED BY ACTION OF THE GOVERNING BODY AND UNTIL SUCH FORMAL ACCEPTANCE WE FOR OURSELVES, OUR HEIRS, EXECUTORS, ADMINISTRATORS AND ASSIGNS DO HEREBY RELEASE THE TOWNSHIP OF CONNOQUENESSING FROM ANY RESPONSIBILITY IN CONNECTION THEREWITH. THIS ACCEPTANCE OF RESPONSIBILITY SHALL BE BINDING UPON CHRISTINE MUZZANA, MY HEIRS, EXECUTORS, ADMINISTRATORS AND ASSIGNS, AND ALL PURCHASERS OF LOTS IN THIS PLAN OF SUBDIVISION.

IN WITNESS WHEREOF, WE HEREUNTO SET OUR HANDS AND SEALS THIS 14 DAY OF August, A.D., 2017

ATTEST:
Christine Muzzana
OWNER

SURVEYOR'S CERTIFICATE

I, KEVIN P. HANNEGAN, A REGISTERED SURVEYOR OF THE COMMONWEALTH OF PENNSYLVANIA, DO HEREBY CERTIFY THAT THE PLAN AS SHOWN HEREON IS BASED UPON ACTUAL FIELD SURVEY OF THE LAND DESCRIBED AND THAT ALL ANGLES, DISTANCES AND COURSES ARE CORRECTLY SHOWN, THAT THE MONUMENTS AND MARKERS HAVE BEEN SET AS SHOWN ON THIS PLAT, AND THAT THIS PLAN REPRESENTS THE LOTS, LAND, STREETS AND HIGHWAYS AS SURVEYED AND PLOTTED BY ME FOR THE OWNERS AND AGENTS.

Kevin P. Hannegan
REGISTRATION NO. SU-048536-E

JUNE 19, 2017
DATE

APPROVAL BY THE CONNOQUENESSING TOWNSHIP PLANNING COMMISSION
THE CONNOQUENESSING TOWNSHIP PLANNING COMMISSION HAS REVIEWED AND RECOMMENDS APPROVAL OF THIS PLAN OF SUBDIVISION ON THIS 5TH DAY OF July, 2017

ATTEST:
CHAIRMAN — SECRETARY

APPROVAL BY THE CONNOQUENESSING TOWNSHIP BOARD OF SUPERVISORS
THE BOARD OF SUPERVISORS OF THE TOWNSHIP OF CONNOQUENESSING, BUTLER COUNTY, PENNSYLVANIA HEREBY APPROVES THIS PLAN OF CONSOLIDATION FOR RECORDING PURPOSES ONLY. THE APPROVAL BY CONNOQUENESSING TOWNSHIP DOES NOT CONSTITUTE AN ACCEPTANCE OF THE ROADS, STREETS, STORM AND SANITARY DRAINAGE FACILITIES, EASEMENTS OR RIGHT OF WAYS, WATER MAINS OR ANY OTHER SERVICES OR IMPROVEMENTS SHOWN ON THE PLAN, NOR AN ASSUMPTION OF MAINTENANCE RESPONSIBILITIES. NOR WILL THE SAME BE ACCEPTED OR MAINTAINED UNTIL CONSTRUCTION IN ACCORDANCE WITH ALL TOWNSHIP SPECIFICATIONS AND REQUIREMENTS AND OFFICIALLY ACCEPTED BY ACTION OF THE BOARD OF SUPERVISORS. THIS APPROVAL SHALL IN NO WAY BE DEEMED AN AUTHORIZATION TO COMMENCE CONSTRUCTION OR RELATED ACTIVITIES. THIS PLAN OF CONSOLIDATION APPROVED BY RESOLUTION OF THE BOARD OF SUPERVISORS OF CONNOQUENESSING TOWNSHIP, BUTLER COUNTY, PENNSYLVANIA ON THIS 5TH DAY OF July 2017

ATTEST:
CHAIRMAN, BOARD OF SUPERVISORS — SECRETARY

BUTLER COUNTY PLANNING COMMISSION REVIEW
REVIEWED BY THE BUTLER COUNTY PLANNING COMMISSION THIS 8TH DAY OF JUNE 2017
CHAIRMAN — SECRETARY

PROOF OF RECORDING
COMMONWEALTH OF PENNSYLVANIA
COUNTY OF BUTLER:

RECORDED IN THE OFFICE OF THE RECORDER OF DEEDS, PLATS, ETC., IN SAID COUNTY, IN PLAN BOOK VOLUME 365, PAGE 34, GIVEN UNDER MY HAND AND SEAL THIS DAY 25 OF AUG 2017

RECORDER OF DEEDS

MICHELE M. MUSTELLO
RECORDER OF DEEDS
BUTLER COUNTY, PA

Instr: 201708250018090 08/25/2017
Pages: 1 F: $45.00 11:38PM
Michele Mustello T20170012912
Butler County Recorder FL

NOTE: ALL SIGNATURES MUST BE MADE WITH A NAVY BLUE INK FELT TIP PEN.

NOW OR FORMERLY
HITENDUH FAMILY LIMITED PARTNERSHIP, NO. 2
PARCEL 120-3F47-2AAG
INSTRUMENT #200513000343B9

LOT 17
KRIESS SUBDIVISION NO. 10
P.B.V. 159, PG. 5

(COMMERCIAL)

NOW OR FORMERLY
MARK A. MUZZANA AND CHRISTINE MUZZANA
PARCEL 120-3F47-2ATB
INSTRUMENT #200710310028193

LOT 103R
MUZZANA LOT LINE REVISION
P.B.V. 279, PG. 28

(COMMERCIAL - VACANT LAND)

NOW OR FORMERLY
JOHN L. NEGLEY AND SHAWN A. NEGLEY
PARCEL 120-3F47-2ATC
INSTRUMENT #201311080032331

LOT 102
MUZZANA SUBDIVISION / LOT LINE REVISION
P.B.V. 264, PG. 45

(COMMERCIAL)

EX. INLET
T=1306.00
F=1302.74(IN)
F=1302.34(OUT)

6" CPP

RIGHT-OF-WAY LINE

50' BUILDING LINE

8" PVC (ON GROUND) — 6" PVC F=1306.45

N 78°49'40" E 389.86'

BUILDING LINES FROM FORMER PLAN TO BE EXTINGUISHED WITH THE RECORDING OF THIS PLAN

S 04°23'07" E 108.00'

S 86°52'54" E 415.00'

30' STORM WATER / ACCESS EASEMENT
P.B.V. 279, PG. 28

N 88°49'37" E 195.00'

S 01°11'15" E 275.00'

20' DRAINAGE EASEMENT
P.B.V. 279, PG. 28

STORM WATER EASEMENT
P.B.V. 279, PG. 28

N 82°11'05" E 100.00'

10.0'

LOT 1

GRAVEL DRIVE

1 STORY METAL BUILDING

NOW OR FORMERLY
CHRISTINE E. MUZZANA, OR HER SUCCESSOR, TRUSTEE OF THE CHRISTINE E. MUZZANA REVOCABLE TRUST
PARCEL 120-3F47-2AAD
INSTRUMENT #201704120007725

LOT 14R
MUZZANA SUBDIVISION/LOT LINE REVISION
P.B.V. 264, PG. 45

KRIESS ROAD 33' T 354

RIGHT-OF-WAY DEDICATION FOR ROADWAY PURPOSES

N 10°13'41" W 301.19'

S 10°13'41" E 301.19'

RIGHT-OF-WAY LINE

RIGHT-OF-WAY LINE

RIGHT-OF-WAY LINE

FORMER RIGHT-OF-WAY LINE

RETAINING WALL

FORMER RIGHT-OF-WAY LINE

25.19'

.01'

.89'

.12'

.01'

.14'

.61'

.01'

.14'

.61'

.01'

.14'

.61

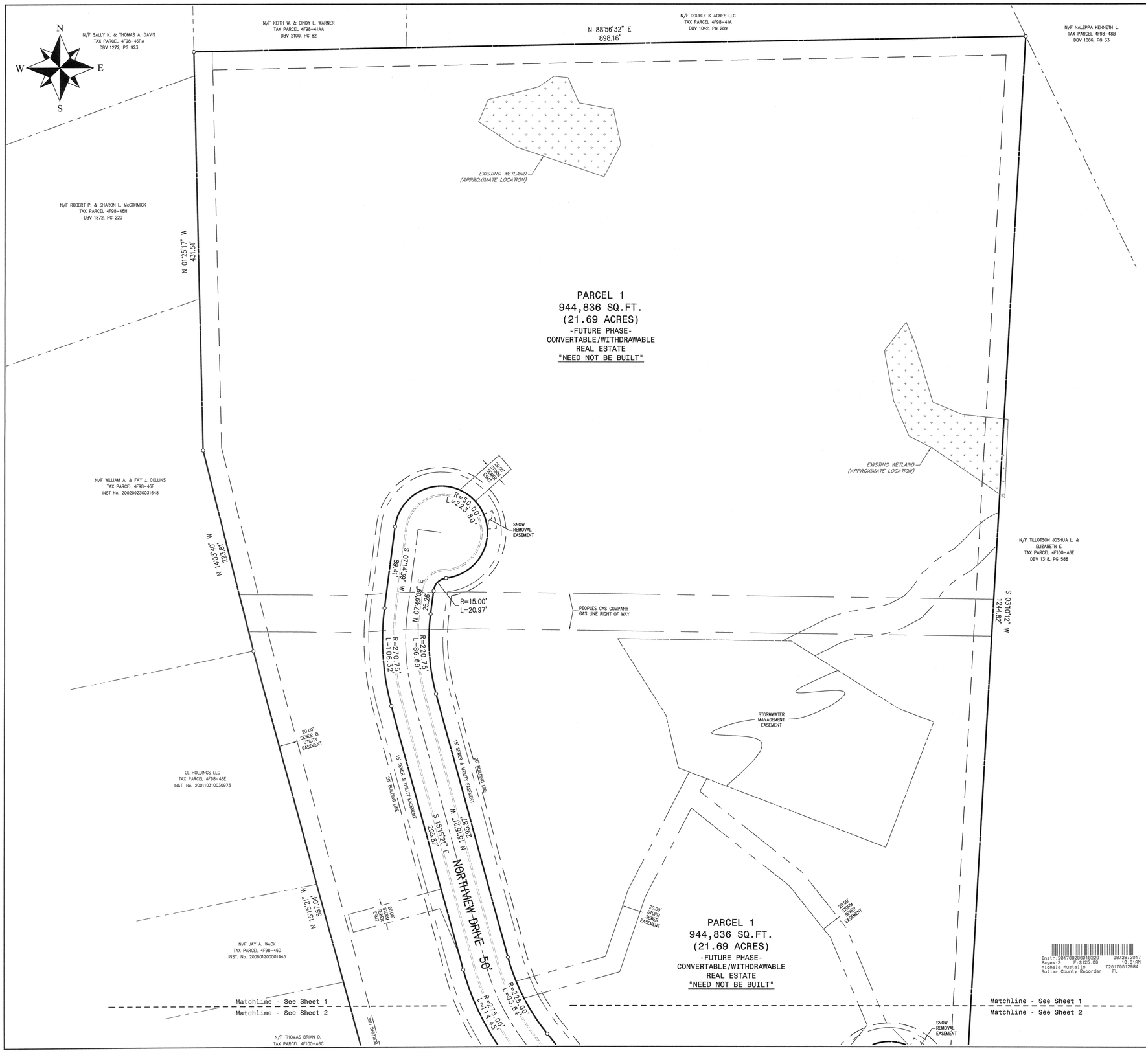

LIMIT OF ENCLOSED UNIT AREA

PREVIOUSLY DECLARED PROPERTY

LIMITED COMMON ELEMENTS (DRIVEWAYS) MUST BE BUILT

UNIT TYPES

- (A) ABBEY
- (C) CANTERBURY
- (L) CAPRI-II
- (Z) PALLAZZO
- (P) PORTICO
- (R) PROMENADE
- (S) SALERNO
- (T) TORINO
- (V) VERONA

NOTES:

PREPARED FOR: SCENIC RIDGE PARTNERS, LP
P.O. BOX 449
MARS, PA 16046

1. ALL PORCHES AND PATIOS ARE PART OF THE DWELLING UNIT AND MUST BE BUILT.
2. ALL UNIT SIDEWALKS ARE CONSIDERED LIMITED COMMON ELEMENTS AND MUST BE BUILT.
3. ALL UNIT DRIVEWAYS ARE CONSIDERED LIMITED COMMON ELEMENTS AND MUST BE BUILT.
4. UNITS MAY BE BUILT IN REVERSE.
5. SEE DECLARATION WHICH IS RECORDED SEPARATELY FOR ARCHITECTURAL DRAWINGS RELATED TO BUILDING TYPES AND UNIT DIMENSIONS.

PLAN REFERENCE : SCENIC RIDGE PLAN OF LOTS
RECORDED IN PLAN BOOK 356, PAGES 12-16

SCENIC RIDGE CONDOMINIUM PLAN NO. 1
RECORDED IN PLAN BOOK 360, PAGE 34

SCENIC RIDGE CONDOMINIUM PLAN NO. 2
RECORDED IN PLAN BOOK 362, PAGE 21

I, JAMES A. SPERDUTE, A PROFESSIONAL LAND SURVEYOR DULY LICENSED BY AND IN THE COMMONWEALTH OF PENNSYLVANIA, HEREBY CERTIFY THAT THE PLATS OF SCENIC RIDGE, A CONDOMINIUM TO WHICH THIS CERTIFICATE IS AFFIXED, CONSISTING OF 3 PAGES AND THE PLANS RECORDED WITH THE DECLARATION, ACCURATELY CONTAINS ALL INFORMATION REQUIRED BY SECTIONS 3210(B) AND (C) OF THE PENNSYLVANIA UNIFORM CONDOMINIUM ACT, ACT 82 OF 1980 (68 P.A.C.S.A. SECTION 3210(B) AND (C)).

James A. Sperdute 8/28/2017

BY JAMES A. SPERDUTE, SURVEYOR REG. NO. 24457-E DATE

COMMONWEALTH OF PENNSYLVANIA)
) SS:
COUNTY OF BUTLER)

ON THE 28 DAY OF August 2017 BEFORE ME, A NOTARY PUBLIC FOR THE COMMONWEALTH OF PENNSYLVANIA, PERSONALLY APPEARED JAMES A. SPERDUTE, KNOWN TO ME TO BE THE PERSON WHOSE NAME IS SUBSCRIBED TO THE ABOVE CERTIFICATION AND BEING DULY SWORN MADE SOLEMN OATH TO THE TRUTH OF THE STATEMENT TO WHICH HIS NAME IS SUBSCRIBED.

IN WITNESS WHEREOF, I HEREUNTO SET MY HAND AND NOTARIAL SEAL.

NOTARY PUBLIC

MY COMMISSION EXPIRES: April 7, 2019

COMMONWEALTH OF PENNSYLVANIA
NOTARIAL SEAL
KATHRYN P. SPERDUTE, Notary Public
Hampton Township, Allegheny County
My Commission Expires April 7, 2019

COMMONWEALTH OF PENNSYLVANIA)
) SS:
COUNTY OF BUTLER)

RECORDED IN THE RECORDER'S OFFICE FOR THE RECORDING OF DEEDS, PLANS, ETC. IN COUNTY IN PLAN BOOK 365 PAGES 35-37 GIVEN UNDER MY HAND AND SEAL THIS 28 DAY OF AUGUST, 2017

RECORDER OF DEEDS

MICHELE M. MUSTELLO
RECORDER OF DEEDS
My Commission Expires First Monday in January 2020

SURVEYOR

BUTLER COUNTY
RECORDER OF DEEDS

PLAN BOOK	PAGE
365	35

GRAPHIC SCALE

50 0 25 50 100 200

(IN FEET)
1 inch = 50 ft.

LOT AREA TABULATION	PARCEL 1		PARCEL 2-A		PARCEL 2-B	
	SQ.FT.	ACRES	SQ.FT.	ACRES	SQ.FT.	ACRES
ORIGINAL TRACT:	944,836	21.69	338,935	7.78	671,106	15.41
CONDO PLAN NO. 1	0	0	64,073.38	1.47	119,049	2.73
CONDO PLAN NO. 2	0	0	19,805.00	0.45	0	0
CONDO PLAN NO. 3	0	0	75,101.43	1.72	84,534.68	1.94
AREA REMAINING FOR DEVELOPMENT (CONVERTIBLE/WITHDRAWABLE REAL ESTATE)	944,836	21.69	179,955.19	4.14	467,522.32	10.74

Instr:201708280018229 08/28/2017
Pages:3 F:$125.00 10:51AM
Michele Mustello T20170012984
Butler County Recorder FL

DRAWING NUMBER:	1010-1717902
DRAWING SCALE:	1"=50'
DATE:	AUGUST 24, 2017
DRAWN BY:	JSS
REVISIONS:	

SHEET 1 OF 3

SCENIC RIDGE CONDOMINIUM PLAN NO. 3

PREPARED FOR SCENIC RIDGE PARTNERS, LP.
P.O. BOX 449 MARS, PA 16046

LANCASTER TOWNSHIP, BUTLER COUNTY, PENNSYLVANIA

SLS
SPERDUTE LAND SURVEYING
HARMONY, PA
724-452-4162
SLS@zoominternet.net

REAL ESTATE
"NEED NOT BE BUILT"

Matchline - See Sheet 1
Matchline - See Sheet 2

Matchline - See Sheet 1
Matchline - See Sheet 2

N/F THOMAS BRIAN D.
TAX PARCEL 4F100-A6C
INST. NO. 200305070019243

N/F TILLOTSON JOSHUA L. & ELIZABETH E.
TAX PARCEL 4F100-A6E
DBV 1318, PG 588

GILLILAND KIM L. & KIMBERLY S.
TAX PARCEL 53-A24
DBV 852, PG 332

N/F JOHN & LYNN DeSIMONE
TAX PARCEL 200-53-A22
INST. No. 200505030010973
LOT 22

N/F TILLOTSON JOSHUA L. & ELIZABETH E.
TAX PARCEL 200-53-A20
DBV 992, PG 07
LOT 20

N/F RICHARD L. & SUSAN MACK
TAX PARCEL 200-53-A21
INST. No. 200405050004138
LOT 21

N/F JOHN & LYNN DeSIMONE
TAX PARCEL 200-53-A23
INST. No. 200510270031127
LOT 23

N/F THOMAS A. & SALLY K. DAVIS
TAX PARCEL 4F100-A6C
DBV 852, PG 332

N/F KERR R. GEORGIANN & DAVID H.
TAX PARCEL 200-53-A9
DBV 1963, PG 85
PART OT LOTS 9 & 10

N/F KERR R. GEORGIANN & DAVID H.
TAX PARCEL 200-53-A10A
DBV 1963, PG 85
PART OT LOTS 9 & 10

N/F BELSTERLING NORBERT J. & TRS ET AL
TAX PARCEL 200-53-A8
INST No. 200212300044427
LOT 8
PART LOT 9

N/F EIJ & JULIE WAHL
TAX PARCEL 200-53-A3
INST. No. 200506010013911
LOT 3

N/F SPAGNOLA TR ET AL
TAX PARCEL 200-53-A2
DBV 1092, PG 277
LOT 2

N/F SPAGNOLA TR ET AL
TAX PARCEL 200-53-A1
DBV 2281 PG 291
LOT 1

LOT 11

N/F DONALD J. & KAREN K. KOGER
TAX PARCEL 200-53-A11
DBV 1145, PG 20

LOT 12

N/F COVELL ARTHUR A. & MARISSA L.
TAX PARCEL 200-53-A13
DBV 1311, PG 282
LOT 13

WEDGEWOOD COURT 50'

SOUTHVIEW DR. 50'

PARCEL 1
944,836 SQ.FT.
(21.69 ACRES)
-FUTURE PHASE-
CONVERTABLE/WITHDRAWABLE
REAL ESTATE
"NEED NOT BE BUILT"

PHASE 2-A
19,805 SQ.FT.
(0.45 ACRES)
(PREVIOUSLY RECORDED)

304
302
300

SNOW REMOVAL EASEMENT

20' BUILDING LINE

15' SEWER & UTILITY EASEMENT

15' UTILITY EASEMENT

R=50.00' L=237.65'
R=25.00' L=29.93'
R=125.00' L=11.60'
R=25.00' L=15.34'
R=175.00' L=51.16'
R=25.00' L=36.88'
R=175.00' L=71.00'
R=115.73' L=46.58'
R=25.00' L=39.11'
R=210.00' L=78.76'
R=225.00' L=93.54'
R=275.00' L=114.45'
R=475.00' L=51.71'
R=25.00' L=39.27'
R=475.00' L=87.23'

N 20°19'39" W 142.15'
S 39°06'02" E 147.45'
N 25°30'21" W 154.16'
S 20°53'58" W 200.67'
N 20°19'39" W 267.16'
S 81°34'58" W 267.62'
S 02°23'40" W 74.76'
N 81°34'58" E 95.83'
S 81°34'58" W 95.83'
N 81°34'58" E 109.10'
S 08°25'02" E 252.00'
N 83°12'25" E 128.80'
N 77°45'27" E 110.00'
S 12°14'33" E 184.32'
S 04°36'41" E 257.89'
S 01°26'00" E 102.54'
S 83°02'16" W 113.98'
N 20°19'39" W 97.90'
N 35°41'21" W 248.22'
N 88°58'33" E

GRAPHIC SCALE

50 0 25 50 100 200

(IN FEET)
1 inch = 50 ft.

N
W E
S

PLAN BOOK	PAGE
365	36

DRAWING NUMBER:	1010-1717902
DRAWING SCALE:	1"=50'
DATE:	AUGUST 24, 2017
DRAWN BY:	JSS
REVISIONS:	

SHEET 2 OF 3

SCENIC RIDGE CONDOMINIUM PLAN NO. 3

PREPARED FOR SCENIC RIDGE PARTNERS, LP.
P.O. BOX 449 MARS, PA 16046

LANCASTER TOWNSHIP, BUTLER COUNTY, PENNSYLVANIA

SPROUTE LAND SURVEYING
SLS
HARMONY, PA
724-452-4262
SLS1@zoominternet.net
SURVEYING • LAYOUT • TOPOGRAPHIC MAPPING
CONSTRUCTION & LAND DEVELOPMENT SERVICES

Matchline - See Sheet 2
Matchline - See Sheet 3

N/F DOSCH JUSTIN S. & AUTUMN M.
TAX PARCEL 4F100-A6D
INST. No. 200502280004751

N 88°23'19" E
335.70'

N 01°36'41" W
17.74'

ROUTE 19 - PERRY HIGHWAY

R=1,333.57'
L=202.93'

N 89°15'39" W
62.03'

N 17°06'21" E
284.04'

20' BUILDING LINE

REMAINING PORTION
OF PARCEL "2-B"
467,522.32 SQ.FT.
(10.74 ACRES)
-FUTURE PHASE-
CONVERTABLE/WITHDRAWABLE
REAL ESTATE
"NEED NOT BE BUILT"

N 02°22'21" E
117.87'

N/F DONATELLI JOSEPH V.
TAX PARCEL 4F100-A4B
DBV 2676, PG 108

S 89°12'51" W
200.00'

N/F KREIDER JAMES P. & BRIDGET
TAX PARCEL 4F100-A6A
INST No. 200003030004682

N 02°22'21" E
180.00'

N/F SCHOTT AARON
TAX PARCEL 4F100-A4C
INST. No. 200308200037452

N/F SCHOTT AARON
TAX PARCEL 4F100-A6B
INST No. 200308200037452

S 89°12'51" W
193.10'

N/F DOMHOFF FAMILY TRUSTEES
TAX PARCEL 4F100-A16A
INST. No. 200206190020865

LOT 1

SUBDIVISION FOR OSCAR P. DOMHOFF
LOTS 1 & 2
PLAN BOOK 139, PAGE 20

N/F DOUGLAS P. &
LARRI JO DOMHOFF
TAX PARCEL 4F100-A16AA
DBV 1640, PG 30

LOT 2

S 89°29'20" W
467.54'

N/F EARL & SUSAN MARY WACK
TAX PARCEL 4F100-A16B
DBV 1095, PG 21

S 89°07'34" W
419.60'

N/F EARL & SUSAN MARY WACK
TAX PARCEL 4F100-A16H
DBV 954, PG 614

N/F KEITH & CAROLE KALMBACH
TAX PARCEL 4F100-A8B
DBV 2328, PG 801

LOT 1
HUCH - ECKSTEIN PLAN
PBV 163, PG 20

N/F JOHN & LINDA WAXTER
TAX PARCEL 4F100-A8
DBV 2699, PG 760

LOT 2B
LAURA P. HUCH PLAN
PBV 173, PG 35

S 00°44'15" E
812.60'

SOUTHVIEW DR. 50'

WESTVIEW CIRCLE 50'

PHASE 1-A
64,073.38 SQ.FT.
(1.47 ACRES)
(PREVIOUSLY RECORDED)

REMAINING PORTION
OF PARCEL "2-A"
179,955.19 SQ.FT.
(4.14 ACRES)
-FUTURE PHASE-
CONVERTABLE/WITHDRAWABLE
REAL ESTATE
"NEED NOT BE BUILT"

PHASE 1-B
119,049 SQ.FT.
(2.73 ACRES)
(PREVIOUSLY RECORDED)

PHASE 3-A
75,101.43 SQ.FT.
(1.72 ACRES)
MUST BE BUILT

PHASE 3-B
84,534.68 SQ.FT.
(1.94 ACRES)
MUST BE BUILT

REMAINING PORTION
OF PARCEL "2-B"
467,522.32 SQ.FT.
(10.74 ACRES)
-FUTURE PHASE-
CONVERTABLE/WITHDRAWABLE
REAL ESTATE
"NEED NOT BE BUILT"

N 88°38'33" E
260.60'

N 88°38'33" E
277.77'

N 01°19'48" W
28.77'

S 01°21'27" E
61.01'

S 01°19'48" E
28.77'

S 43°05'52" E
150.00'

N 47°04'57" E
184.20'

S 01°24'21" E
134.68'

N 88°35'39" E
26.97'

N 70°51'30" E
210.87'

N 01°24'21" W
155.14'

N 87°24'59" E
169.28'

S 01°24'19" E
87.63'

N 35°16'15" E
39.30'

N 01°24'01" W
197.58'

S 88°35'41" W
8.77'

N 10°45'30" W
134.97'

N 02°22'21" E
117.87'

N 63°37'37" W
152.42'

N 73°06'37" W
135.89'

N 73°06'37" W
172.64'

N 79°45'43" W
156.94'

S 77°16'55" W
152.06'

S 00°48'01" E
98.24'

N 25°22'11" E
57.26'

S 64°03'36" E
74.76'

S 64°03'36" E
44.78'

N 64°03'36" W
74.76'

N 70°42'42" E
9.28'

N 10°53'23" E
208.11'

N 17°06'37" E
31.36'

S 72°53'43" E
31.36'

S 17°06'37" W
31.36'

N 72°53'43" W
31.36'

N 17°06'37" E
31.36'

S 17°06'37" W
31.36'

S 72°53'43" E
31.36'

N 72°53'43" W
31.36'

S 17°06'37" W
31.36'

N 17°06'37" E

N 87°12'23" E 171.00'

OPEN FIELD

218.00'

N 49°58'19" E

50' BUILDING LINE (REAR YARD)

30' BUILDING LINE (SIDE YARD)

EDGE OF WOODS

Lot 3
1.50 Acre

30' BUILDING LINE (SIDE YARD)

222.50'

S 20°59'00" W

Part of Remnant

N 39°10'47" E 72.22'

OUTHOUSE TO BE REMOVED

SHED

SEPTIC FIELD +/-

141.00'

S 77°04'44" E

ROW OF WALNUT TREES

88.06'

N 80°15'14" E 170.75'

S 09°44'46" E 125.00'

CREEK

30' BUILDING LINE (SIDE YARD)

119.94'

N 21°13'33" E

50' BUILDING LINE (REAR YARD)

COTTAGE

SHED

COTTAGE

SEPTIC FIELD +/-

Lot 4
1.50 Acre

50' BUILDING LINE (FRONT YARD)

R=50.00' A=50.60'
Ch=S 78°32'47" E
48.47'

N 07°33'45" W 118.14'

R=50.00' A=28.34'
Ch=N 33°19'09" W
27.96'

S 87°36'37" E
150.00'

198.34'

N 11°28'28" E

SHED

N 69°47'35" W 44.63'

℄ 20' PROPOSED DRIVEWAY EASEMENT

℄ PROPOSED 20' UTILITY EASEMENT

N 84°14'46" W 266.63'

190.20'

297.35'

595.97'

118.74'

N 75°13'41" E

182.03'

N 68°29'40" E

169.55'

S 68°29'40" W

S 75°13'41" W 123.88'

N 02°58'38" W 38.17'

77.44'

N 02°23'23" E

(37.36')

298.62'

(195.33')

N 80°15'14" E

PROPOSED 50' PRIVATE R/W

603.48'

EXISTING GRAVEL CUL-DE-SAC

50.00' R

65.89'

7.33'

165.19'

(16.25')

S 87°36'37" E 231.08'

EX. GRAVEL CARTWAY

1.52 ACRE

577.23'

S 80°15'14" W

R=50.00' A=125.00'
Ch=S 00°50'37" W
94.90'

R=25.00' A=30.77'
Ch=N 52°20'45" W
28.87'

SPRINGHOUSE

174.12'

N 87°36'37" W 307.10'

132.98'

26.25'

152.68'

R=50.00' A=14.69'
Ch=N 79°11'35" W
14.64'

SHED

DECK

COTTAGE

104.18'

S 12°26'28" W

BRIDGE

WOOD BINS

N 28°35'32" E

℄ 20' EASEMENT

PROPOSED 20' EASEMENT

COTTAGE

WELL

(Tract One)

REMNANT TAX PARCEL 060-2F108-9
N/F WILLIAM J. & JUDITH B. YOUSKO,
JOHN D. & JULIA ANN YOUSKO,
JAY ALBERT YOUSKO, VIRGINIA L. RICHARDS,
ROBERT BOST & CAROL ROGEL
EX. 79.65 ACRES+/-
+ 3.14 ACRE TAX PARCEL 060-2F108-11CA
- 1.50 ACRE LOT 1
- 1.50 ACRE LOT 2
- 1.50 ACRE LOT 3
- 1.50 ACRE LOT 4
- 1.52 ACRE 50' PRIVATE R/W AREA
75.27 ACRES+/- TOTAL AFTER CONVEYANCES - REMNANT
NON-BUILDING LOT

Approximate location only

(Tract Two)

N 04°21'47" W 52.32'

N 04°21'47" W 71.93'

℄ GALLAGHER ROAD
T-642 33' R/W
(Paved 18.6')

N 03°38'21" W 137.33'

N 01°14'16" W 84.87'

N 00°09'27" E 130.86'

N 01°02'44" E 87.08'

N 35°45'21" E 193.48'

50' BUILDING LINE (REAR YARD)

30' BUILDING LINE (SIDE YARD)

Lot 2
1.50 Acre

PROPOSED 20' EASEMENT

203.53'

S 35°45'21" W

150.00'

N 54°14'39" W

SEPTIC FIELD +

POND

S 28°05'03" W 80.46'

N 08°28'05" E 125.10'

Lot 1
1.50 Acre

164.44'

300.50'

S 24°05'58" W

30' BUILDING LINE (SIDE YARD)

S 87°20'00" E
Original lot line to be removed

300.00'

N 87°20'00" W

984.27'

N/F B.W. McCANDLESS

455.56'

Original lot line to be removed

N 22°04'47" E

30' BLDG. LINE (SIDE YARD)

145.25'

50' BLDG. LINE (REAR YARD)

455.56'

N/F M.A. DANIELS

N 86°45'50" W 181.44'

310.31'

S 03°14'10" W

N 03°14'10" E

Tax Parcel
060-2F108-11CA
Ex. 3.14 Acres
to be combined
with Remnant

(Tract Three)

N 89°41'35" W 150.00'

N 87°20'00" W 300.00'

0' 50' 100' 150'

Instr:201708290016271 08/29/2017
Pages:2 F $65.00 2:44PM
Michele Mustello T20170013030
Butler County Recorder FL

PLAN BOOK	PAGE
365	38

CLAY TWP.

SITE

JAMISONVILLE

JAMISONVILLE RD.

ELLIOTT RD.

STONY RUN

CENTER

VICINITY MAP Scale: 1" = 2000'

COMMONWEALTH OF PENNSYLVANIA
REGISTERED PROFESSIONAL
Cheryl A. Hughes
LAND SURVEYOR
SU-22466-E

REVISED: 06/12/2017 ; AS-BUILT CUL-DE-SAC LOCATION
REVISED: 08/17/2016; ENGINEER'S REVIEW COMMENTS

INSTRUMENT #201308190024327
INSTRUMENT #201308190024324
INSTRUMENT #201105160011768
INSTRUMENT #200911160026933

Land Surveyors, Inc.
523 North Main Street
P.O. Box 1061
Butler, PA 16003-1061
(724) 287-6865
Cheryl A. Hughes, PLS Owner

FINAL PLAN OF SUBDIVISION
FOR: WILLIAM J. & JUDITH B. YOUSKO,
JOHN D. YOUSKO & JULIA ANN YOUSKO,
JAY ALBERT YOUSKO, VIRGINIA L. RICHARDS,
ROBERT BOST & CAROL ROGEL
SITUATE: CENTER TWP., BUTLER CO, PA

Date 08/08/16	Scale 1" = 50'	Dwn By BEC	Ckd By CAH
Parcel No. 060-2F108-9 & 11CA	Sheet 1 of 2		Service No. 16-047
Address 110 GALLAGHER ROAD			

KNOW ALL MEN BY THESE PRESENTS, that we, William J. and Judith B. Yousko, of the Township of Center, County of Butler, Commonwealth of Pennsylvania, for ourselves, heirs, executors, administrators and assigns, do hereby adopt this plan as our Plan of Subdivision of our property, situate in the Township of Center, Butler County, Pennsylvania, and for diverse advantages accruing to us, do hereby dedicate forever, for public use for highway, drainage, sewage and utility purposes, all drives, roads, lands, rights-of-way, easements, ways and other public ways shown upon the plan, with the same force and effect as if the same had been opened through legal proceedings and in consideration of the approval of said plan and any future acceptance of said public highways, rights-of-way and easements by said County of Butler or said Township of Center we, William J. and Judith B. Yousko, hereby agree to and by these presents do release and forever discharge said County of Butler, or said Township of Center, their successors or assigns from any liability for damages arising and to arise from any appropriation of said ground for public highways, and other public uses and physical grading thereof to any grades that maybe established. This dedication and release shall be binding upon William J. and Judith B. Yousko, and assigns and purchasers of lots in this plan.

IN WITNESS WHEREOF, we, hereunto set our hands and seals this 10th day of August, A.D. 2017.

ATTEST:

OWNER OWNER

NOTARY PUBLIC

COMMONWEALTH OF PENNSYLVANIA
NOTARIAL SEAL
Jessica F. Billeck, Notary Public
City of Pittsburgh, Allegheny County
My Commission Expires June 18, 2018
MEMBER, PENNSYLVANIA ASSOCIATION OF NOTARIES

The forgoing adoption and dedication is made by William J. and Judith B. Yousko, with the full understanding and agreement that the approval of the Board of Supervisors of the Township of Center, if hereto attached, will become null and void unless this plan is recorded in the Recorder of Deeds Office of Butler County Courthouse, Butler, Pennsylvania within ninety (90) days of said approval.

OWNER OWNER

COMMONWEALTH OF PENNSYLVANIA)SS:
COUNTY OF BUTLER)

Before me, the subscriber, a Notary Public in and for said Commonwealth and County, personally appeared the above named William J. and Judith B. Yousko, who acknowledged the foregoing release and dedication and plan of subdivision to be their act and deed and desired the same to be recorded as such.

Sworn to and subscribed before me this 10th day of August, 2017.

My Commission expires the 18th day of June, 2018.

SEAL

NOTARY PUBLIC

COMMONWEALTH OF PENNSYLVANIA
NOTARIAL SEAL
Jessica F. Billeck, Notary Public
City of Pittsburgh, Allegheny County
My Commission Expires June 18, 2018
MEMBER, PENNSYLVANIA ASSOCIATION OF NOTARIES

I, Cheryl A. Hughes, a Registered Professional Land Surveyor of the Commonwealth of Pennsylvania, do hereby certify that this plan correctly represents the lots, lands, streets, alleys, rights-of-way and highways as surveyed and plotted by me for the Owners, developers or agents.

June 12 2017 SEAL

DATE REGISTRATION NUMBER SU-32490-E

This plat of subdivision has been approved by the Planning Commision of the Township of Center, Butler County, Pennsylvania on this 28th day of June, 2017.

CHAIRMAN SEAL SECRETARY

The Board of Supervisors of the Township of Center, Butler County, Pennsylvania, hereby gives public notice that it is approving this plan of subdivision for recording purposes only. The approval of this subdivision plat by the Township of Center does not constitute an acceptance of the roads, streets, alleys, storm water and sanitary sewage drainage facilities, easements or rights-of-way, water mains or any other services or improvements shown on this plan nor an assumption of maintenance responsibility, nor will the same be accepted or maintained until constructed in accordance with all Township Specification and requirements and officially accepted by action of the Board of Supervisors.

This plat of subdivision approved by resolution of the Board of Supervisors of the Township of Center, Butler County, Pennsylvania on this 12th day of July, 2017.

Edward G. Latuska SEAL

CHAIRMAN SECRETARY

Reviewed with comments by the Butler County Planning Commission. Letter to Center Township Board of Supervisors dated this 17TH day of AUGUST, 2016.

CHAIRMAN SEAL SECRETARY

BUTLER COUNTY PLANNING COMMISSION

COMMONWEALTH OF PENNSYLVANIA)SS:
COUNTY OF BUTLER)

Recorded in the office for the recording of deeds, plats, etc. in said County, in Plan Book Volume 365 page 38-39.

Given under my hand and seal this 28 day of AUGUST, 2017.

SEAL

RECORDER

MICHELE M. MUSTELLO
RECORDER OF DEEDS
My Commission Expires First Monday in January 2020

RECORDER OF DEEDS BUTLER COUNTY, PA

KNOW ALL MEN BY THESE PRESENTS, that we, John D. and Julia Ann Yousko, of the Township of Center, County of Butler, Commonwealth of Pennsylvania, for ourselves, heirs, executors, administrators and assigns, do hereby adopt this plan as our Plan of Subdivision of our property, situate in the Township of Center, Butler County, Pennsylvania, and for diverse advantages accruing to us, do hereby dedicate forever, for public use for highway, drainage, sewage and utility purposes, all drives, roads, lands, rights-of-way, easements, ways and other public ways shown upon the plan, with the same force and effect as if the same had been opened through legal proceedings and in consideration of the approval of said plan and any future acceptance of said public highways, rights-of-way and easements by said County of Butler or said Township of Center we, John D. and Julia Ann Yousko, hereby agree to and by these presents do release and forever discharge said County of Butler, or said Township of Center, their successors or assigns from any liability for damages arising and to arise from any appropriation of said ground for public highways, and other public uses and physical grading thereof to any grades that maybe established. This dedication and release shall be binding upon John D. and Julia Ann Yousko, and assigns and purchasers of lots in this plan.

IN WITNESS WHEREOF, we, hereunto set our hands and seals this 19 day of July, A.D. 2017.

ATTEST:

OWNER OWNER

NOTARY PUBLIC

The forgoing adoption and dedication is made by John D. and Julia Ann Yousko, with the full understanding and agreement that the approval of the Board of Supervisors of the Township of Center, if hereto attached, will become null and void unless this plan is recorded in the Recorder of Deeds Office of Butler County Courthouse, Butler, Pennsylvania within ninety (90) days of said approval.

OWNER OWNER

COMMONWEALTH OF PENNSYLVANIA)SS:
COUNTY OF BUTLER)

Before me, the subscriber, a Notary Public in and for said Commonwealth and County, personally appeared the above named John D. and Julia Ann Yousko, who acknowledged the foregoing release and dedication and plan of subdivision to be their act and deed and desired the same to be recorded as such.

Sworn to and subscribed before me this 19 day of July, 2017.

My Commission expires the 04 day of June, 2018.

SEAL

NOTARY PUBLIC

COMMONWEALTH OF PENNSYLVANIA
NOTARIAL SEAL
David C. Harkins, Notary Public
Center Twp., Butler County
My Commission Expires June 4, 2018
MEMBER, PENNSYLVANIA ASSOCIATION OF NOTARIES

KNOW ALL MEN BY THESE PRESENTS, that I, Jay Albert Yousko, of the Township of Center, County of Butler, Commonwealth of Pennsylvania, for myself, heirs, executors, administrators and assigns, do hereby adopt this plan as my Plan of Subdivision of my property, situate in the Township of Center, Butler County, Pennsylvania, and for diverse advantages accruing to me, do hereby dedicate forever, for public use for highway, drainage, sewage and utility purposes, all drives, roads, lands, rights-of-way, easements, ways and other public ways shown upon the plan, with the same force and effect as if the same had been opened through legal proceedings and in consideration of the approval of said plan and any future acceptance of said public highways, rights-of-way and easements by said County of Butler or said Township of Center I, Jay Albert Yousko, hereby agree to and by these presents do release and forever discharge said County of Butler, or said Township of Center, their successors or assigns from any liability for damages arising and to arise from any appropriation of said ground for public highways, and other public uses and physical grading thereof to any grades that maybe established. This dedication and release shall be binding upon Jay Albert Yousko, and assigns and purchasers of lots in this plan.

IN WITNESS WHEREOF, i, hereunto set my hand and seal this 27th day of July, A.D. 2017.

ATTEST:

NOTARY PUBLIC OWNER

The forgoing adoption and dedication is made by Jay Albert Yousko, with the full understanding and agreement that the approval of the Board of Supervisors of the Township of Center, if hereto attached, will become null and void unless this plan is recorded in the Recorder of Deeds Office of Butler County Courthouse, Butler, Pennsylvania within ninety (90) days of said approval.

OWNER

COMMONWEALTH OF ~~PENNSYLVANIA~~ VA)SS:
COUNTY OF ~~BUTLER~~) Fauquier

Before me, the subscriber, a Notary Public in and for said Commonwealth and County, personallly appeared the above named Jay Albert Yousko, who acknowledged the foregoing release and dedication and plan of subdivision to be his act and deed and desired the same to be recorded as such.

Sworn to and subscribed before me this 27th day of July, 2017.

My Commission expires the 30 day of April, 2019.

SEAL

NOTARY PUBLIC

JESSICA A. FAZENBAKER
NOTARY PUBLIC
COMMONWEALTH OF VIRGINIA
MY COMMISSION EXPIRES APRIL 30, 2019
COMMISSION # 7502465

KNOW ALL MEN BY THESE PRESENTS, that I, Carol Rogel, of the Township of Center, County of Butler, Commonwealth of Pennsylvania, for myself, heirs, executors, administrators and assigns, do hereby adopt this plan as my Plan of Subdivision of my property, situate in the Township of Center, Butler County, Pennsylvania, and for diverse advantages accruing to me, do hereby dedicate forever, for public use for highway, drainage, sewage and utility purposes, all drives, roads, lands, rights-of-way, easements, ways and other public ways shown upon the plan, with the same force and effect as if the same had been opened through legal proceedings and in consideration of the approval of said plan and any future acceptance of said public highways, rights-of-way and easements by said County of Butler or said Township of Center I, Carol Rogel, hereby agree to and by these presents do release and forever discharge said County of Butler, or said Township of Center, their successors or assigns from any liability for damages arising and to arise from any appropriation of said ground for public highways, and other public uses and physical grading thereof to any grades that maybe established. This dedication and release shall be binding upon Carol Rogel, and assigns and purchasers of lots in this plan.

IN WITNESS WHEREOF, i, hereunto set my hand and seal this 4th day of August, A.D. 2017.

ATTEST:

NOTARY PUBLIC OWNER

The forgoing adoption and dedication is made by Carol Rogel, with the full understanding and agreement that the approval of the Board of Supervisors of the Township of Center, if hereto attached, will become null and void unless this plan is recorded in the Recorder of Deeds Office of Butler County Courthouse, Butler, Pennsylvania within ninety (90) days of said approval.

OWNER

COMMONWEALTH OF PENNSYLVANIA)SS:
COUNTY OF ~~BUTLER~~) Allegheny

Before me, the subscriber, a Notary Public in and for said State and County, personally appeared the above named Carol Rogel, who acknowledged the foregoing release and dedication and plan of subdivision to be her act and deed and desired the same to be recorded as such.

Sworn to and subscribed before me this 4th day of August, 2017.

My Commission expires the 27th day of July, 2019.

SEAL

NOTARY PUBLIC

COMMONWEALTH OF PENNSYLVANIA
NOTARIAL SEAL
Diana Reed, Notary Public
Bethel Park Boro, Allegheny County
My Commission Expires July 27, 2019

KNOW ALL MEN BY THESE PRESENTS, that I, Virginia L. Richards, of the Township of Center, County of Butler, Commonwealth of Pennsylvania, for myself, heirs, executors, administrators and assigns, do hereby adopt this plan as my Plan of Subdivision of my property, situate in the Township of Center, Butler County, Pennsylvania, and for diverse advantages accruing to me, do hereby dedicate forever, for public use for highway, drainage, sewage and utility purposes, all drives, roads, lands, rights-of-way, easements, ways and other public ways shown upon the plan, with the same force and effect as if the same had been opened through legal proceedings and in consideration of the approval of said plan and any future acceptance of said public highways, rights-of-way and easements by said County of Butler or said Township of Center I, Virginia L. Richards, hereby agree to and by these presents do release and forever discharge said County of Butler, or said Township of Center, their successors or assigns from any liability for damages arising and to arise from any appropriation of said ground for public highways, and other public uses and physical grading thereof to any grades that maybe established. This dedication and release shall be binding upon Virginia L. Richards, and assigns and purchasers of lots in this plan.

IN WITNESS WHEREOF, i, hereunto set my hand and seal this 19 day of July, A.D. 2017.

ATTEST:

NOTARY PUBLIC OWNER

The forgoing adoption and dedication is made by Virginia L. Richards, with the full understanding and agreement that the approval of the Board of Supervisors of the Township of Center, if hereto attached, will become null and void unless this plan is recorded in the Recorder of Deeds Office of Butler County Courthouse, Butler, Pennsylvania within ninety (90) days of said approval.

OWNER

COMMONWEALTH OF PENNSYLVANIA)SS:
COUNTY OF BUTLER)

Before me, the subscriber, a Notary Public in and for said Commonwealth and County, personally appeared the above named Virginia L. Richards, who acknowledged the foregoing release and dedication and plan of subdivision to be her act and deed and desired the same to be recorded as such.

Sworn to and subscribed before me this 19 day of July, 2017.

My Commission expires the 04 day of June, 2018.

SEAL

NOTARY PUBLIC

COMMONWEALTH OF PENNSYLVANIA
NOTARIAL SEAL
David C. Harkins, Notary Public
Center Twp., Butler County
My Commission Expires June 4, 2018
MEMBER, PENNSYLVANIA ASSOCIATION OF NOTARIES

KNOW ALL MEN BY THESE PRESENTS, that I, Robert Bost, of the Township of Center, County of Butler, Commonwealth of Pennsylvania, for myself, heirs, executors, administrators and assigns, do hereby adopt this plan as my Plan of Subdivision of my property, situate in the Township of Center, Butler County, Pennsylvania, and for diverse advantages accruing to me, do hereby dedicate forever, for public use for highway, drainage, sewage and utility purposes, all drives, roads, lands, rights-of-way, easements, ways and other public ways shown upon the plan, with the same force and effect as if the same had been opened through legal proceedings and in consideration of the approval of said plan and any future acceptance of said public highways, rights-of-way and easements by said County of Butler or said Township of Center I, Robert Bost, hereby agree to and by these presents do release and forever discharge said County of Butler, or said Township of Center, their successors or assigns from any liability for damages arising and to arise from any appropriation of said ground for public highways, and other public uses and physical grading thereof to any grades that maybe established. This dedication and release shall be binding upon Robert Bost, and assigns and purchasers of lots in this plan.

IN WITNESS WHEREOF, i, hereunto set my hand and seal this 31 day of July, A.D. 2017.

ATTEST:

NOTARY PUBLIC OWNER

The forgoing adoption and dedication is made by Robert Bost, with the full understanding and agreement that the approval of the Board of Supervisors of the Township of Center, if hereto attached, will become null and void unless this plan is recorded in the Recorder of Deeds Office of Butler County Courthouse, Butler, Pennsylvania within ninety (90) days of said approval.

OWNER

COMMONWEALTH OF PENNSYLVANIA)SS:
COUNTY OF BUTLER)

Before me, the subscriber, a Notary Public in and for said State and County, personally appeared the above named Robert Bost, who acknowledged the foregoing release and dedication and plan of subdivision to be his act and deed and desired the same to be recorded as such.

Sworn to and subscribed before me this 31 day of July, 2017.

My Commission expires the 10 day of June, 2019.

SEAL

NOTARY PUBLIC

COMMONWEALTH OF PENNSYLVANIA
NOTARIAL SEAL
Charles W. Kennedy, Notary Public
Adams Twp., Butler County
My Commission Expires June 10, 2019
MEMBER, PENNSYLVANIA ASSOCIATION OF NOTARIES

NOTES:

SUBJECT TO ANY AND ALL EXISTING RIGHTS-OF-WAY AND EASEMENTS OF RECORD

ACCORDING TO THE FLOOD INSURANCE RATE MAP PREPARED FOR THIS TOWNSHIP, THIS PROPERTY LIES IN ZONE X – AREAS DETERMINED TO BE OUTSIDE OF THE 500 YEAR FLOOD PLAIN.

ZONED R-1A; LOW DENSITY RESIDENTIAL

BUILDING REQUIREMENTS:

MINIMUM LOT FRONTAGE: 125'
MINIMUM LOT AREA: 1 ACRE
50' BUILDING LINE (FRONT YARD)
30' BUILDING LINE (SIDE YARD)
50' BUILDING LINE (REAR YARD)

PROPERTY OWNERS: WILLIAM J. & JUDITH B. YOUSKO
JOHN D. & JULIA ANN YOUSKO
JAY ALBERT YOUSKO
VIRGINIA L. RICHARDS
ROBERT BOST
CAROL ROGEL
c/o JOHN & JULIA YOUSKO
606 BROWNSDALE ROAD
RENFREW, PA 16053

ALL CONVEYANCES UNDER THIS PLAN ARE SUBJECT TO THE GRANTEES, THEIR HEIRS, SUCCESSORS AND ASSIGNS SHARING EQUALLY IN THE COSTS AND EXPENSES OF MAINTAINING ANY AND ALL EASEMENTS IN GOOD REPAIR. THE USE BY THE GRANTEES, THEIR HEIRS, SUCCESSORS AND ASSINGS OF SAID EASEMENTS SHALL BE LIMITED TO INGRESS, EGRESS AND REGRESS AND NO USE SHALL BE EXPANDED OR MODIFIED WITHOUT PRIOR WRITTEN CONSENT OF ANY AND ALL SIGNATORY LANDOWNERS.

CENTER TOWNSHIP HAS NO LIABILITY OR MAINTENANCE RESPONSIBILITY FOR THE PROPOSED PRIVATE R/W AS SHOWN ON THIS PLAN.

THE PURPOSE OF THIS PLAN IS TO CREATE A LOT AROUND EACH EXISTING COTTAGE.

SEPTIC FIELDS ARE SHOWN IN APPROXIMATE LOCATION PER INFORMATION PROVIDED BY OWNERS.

LOT 1 IS TO BE CONVEYED TO JOHN D. & JULIA ANN YOUSKO
LOT 2 IS TO BE CONVEYED TO JAY ALBERT YOUSKO & VIRGINIA L. RICHARDS
LOT 3 IS TO BE CONVEYED TO WILLIAM J. & JUDITH B. YOUSKO
LOT 4 IS TO BE CONVEYED TO ROBERT BOST & CAROL ROGEL

A PERMIT FROM PA-DEP MAY BE REQUIRED FOR BUILDING WITHIN 50' FROM THE TOP OF BANK OF ANY EXISTING STREAM.

IRON PINS TO BE SET AT LOT CORNERS.

LOT 1 IS SERVED BY AN INDIVIDUAL WELL.
LOTS 2, 3 & 4 ARE SERVED BY SPRING LOCATED WITHIN PRIVATE R/W

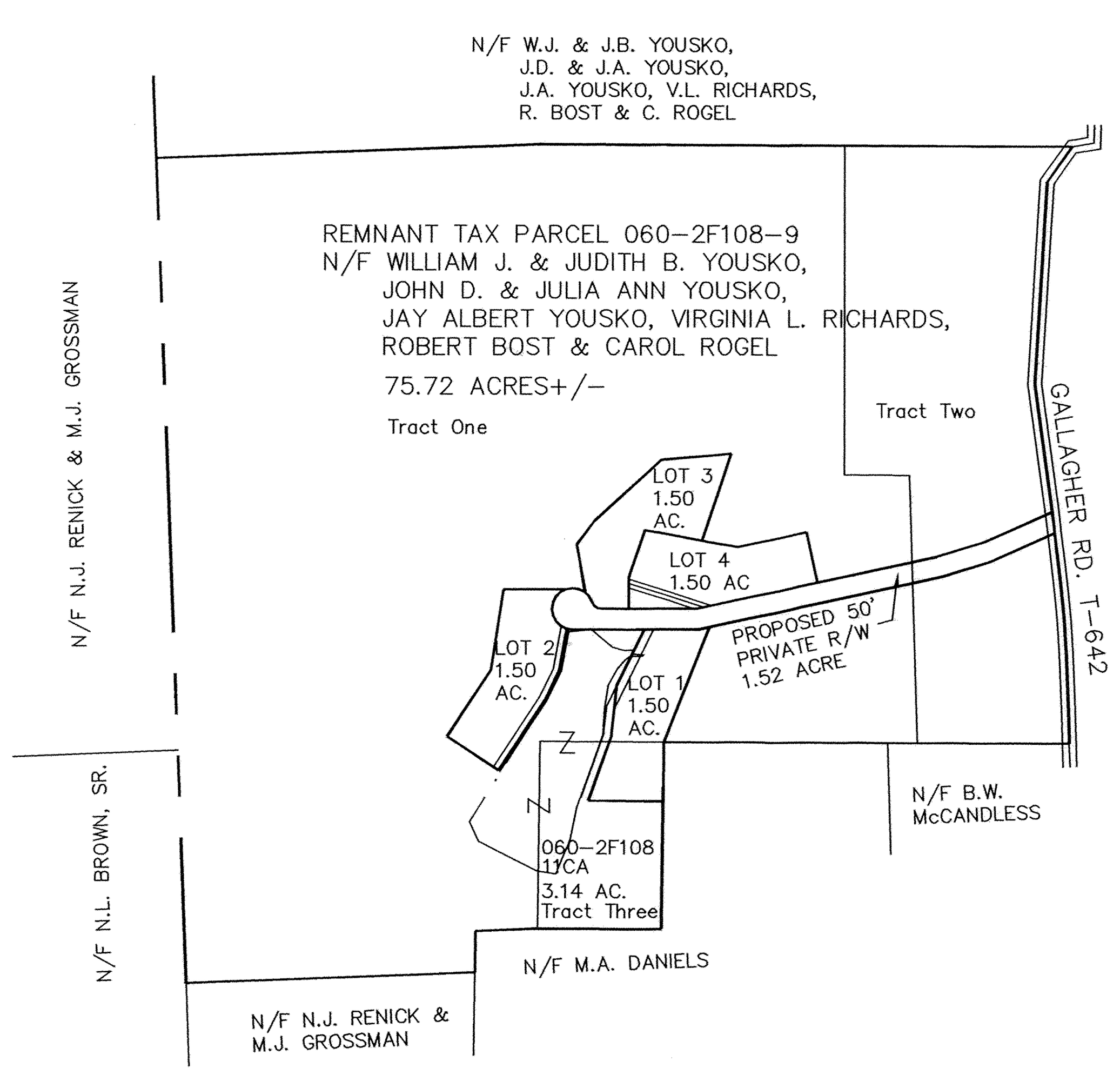

LOCATION MAP Scale: 1" = 400'

COMMONWEALTH OF PENNSYLVANIA
REGISTERED PROFESSIONAL
Cheryl A. Hughes
LAND SURVEYOR
SU-32490-E

REVISED: 06/12/2017 ; AS-BUILT CUL-DE-SAC LOCATION
REVISED: 08/17/2016; ENGINEER'S REVIEW COMMENTS

INSTRUMENT #201308190024327
INSTRUMENT #201308190024324
INSTRUMENT #201105160011768
INSTRUMENT #200911160026933

AS OF THE DATE OF THIS DEED/PLOT PLAN/DEED NOTICE RECORDING, THE RESIDUAL TRACT OF THIS SUBDIVISION IS DEDICATED FOR THE EXPRESS PURPOSE OF SILVICULTURE USE. NO PORTION OF THE RESIDUAL TRACT OF THIS SUBDIVISION HAS BEEN APPROVED BY CENTER TOWNSHIP OR THE APPROVING AGENCY FOR THE INSTALLATION OF SEWAGE DISPOSAL FACILITIES. NO SEWAGE PERMIT WILL BE ISSUED FOR THE INSTALLATION, CONSTRUCTION, CONNECTION TO OR USE OF ANY SEWAGE COLLECTION, CONVEYANCE, TREATMENT OR DISPOSAL SYSTEM (EXCEPT FOR REPAIRS TO EXISTING SYSTEMS) UNLESS THE APPROPRIATE MUNICIPALITY AND APPROVING AGENCY HAVE APPROVED ANY REQUIRED SEWAGE FACILITIES PLANNING FOR THE RESIDUAL TRACT OF THE SUBDIVISION DESCRIBED HEREIN IN ACCORDANCE WITH THE PENNSYLVANIA SEWAGE FACILITIES ACT (35 P.S. SECTIONS 750.1 ET. SEQ.) AND REGULATIONS PROMULGATED THEREUNDER. PRIOR TO SIGNING, EXECUTING, IMPLEMENTING OR RECORDING ANY SALES CONTRACT OR SUBDIVISION PLAN, ANY PURCHASER OR SUBDIVIDER OF ANY PORTION OF THE RESIDUAL TRACT SHOULD CONTACT THE APPROPRIATE OFFICIALS OF CENTER TOWNSHIP, WHICH IS CHARGED WITH ADMINISTERING THE SEWAGE FACILITIES ACT TO DETERMINE WHAT SEWAGE PLANNING IS REQUIRED AND THE PROCEDURE AND REQUIREMENTS FOR OBTAINING APPROPRIATE PERMITS OR APPROVALS.

PLAN BOOK	PAGE
365	39

LSJ Land Surveyors, Inc.
523 North Main Street
P.O. Box 1061
Butler, PA 16003-1061
(724) 287-6865
Cheryl A. Hughes, PLS Owner

FINAL PLAN OF SUBDIVISION
FOR: WILLIAM J. & JUDITH B. YOUSKO, JOHN D. YOUSKO & JULIA ANN YOUSKO, JAY ALBERT YOUSKO, VIRGINIA L. RICHARDS, ROBERT BOST & CAROL ROGEL
SITUATE: CENTER TWP., BUTLER CO, PA

Date 08/08/16	Scale 1" = 50'	Dwn By BEC	Ckd By CAH
Parcel No. 060-2F108-9 & 11CA	Sheet 2 of 2		Service No. 16-047
Address 110 GALLAGHER ROAD			

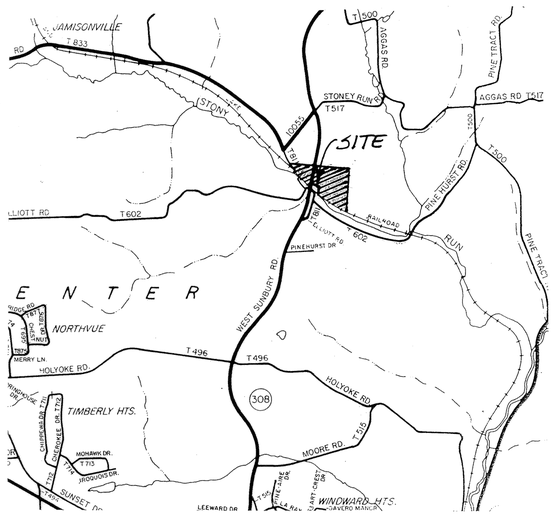

VICINITY MAP Scale: 1" = 2000'

KNOW ALL MEN BY THESE PRESENTS, that the Estate of Jean M. Clark, of the Township of Center, County of Butler, Commonwealth of Pennsylvania, for ourselves, heirs, executors, administrators and assigns, do hereby adopt this plan as our Plan of Subdivision of our property, situate in the Township of Center, Butler County, Pennsylvania, and for diverse advantages accruing to us, do hereby dedicate forever, for public use for highway, drainage, sewage and utility purposes, all drives, roads, lands, rights-of-way, easements, ways and other public ways shown upon the plan, with the same force and effect as if the same had been opened through legal proceedings and in consideration of the approval of said plan and any future acceptance of said public highways, rights-of-way and easements by said County of Butler or said Township of Center, the Estate of Jean M. Clark, hereby agree to and by these presents do release and forever discharge said County of Butler, or said Township of Center, their successors or assigns from any liability for damages arising and to arise from any appropriation of said ground for public highways, and other public uses and physical grading thereof to any grades that maybe established. This dedication and release shall be binding upon the Estate of Jean M. Clark, and assigns and purchasers of lots in this plan.

IN WITNESS WHEREOF, I, hereunto set my hand and seal this 14 day of Aug, A.D. 2017.

ATTEST:

Patricia Saunders
NOTARY PUBLIC

COMMONWEALTH OF PENNSYLVANIA
NOTARIAL SEAL
PATRICIA SAUNDERS
Notary Public
CENTER TWP, BUTLER COUNTY
My Commission Expires Aug 23, 2017

Donald R. Clark
EXECUTOR – Donald R. Clark

Ruth A. McCafferty
EXECUTOR – Ruth A. McCafferty

The forgoing adoption and dedication is made by the Estate of Jean M. Clark, with the full understanding and agreement that the approval of the Board of Supervisors of the Township of Center, if hereto attached, will become null and void unless this plan is recorded in the Recorder of Deeds Office of Butler County Courthouse, Butler, Pennsylvania within ninety (90) days of said approval.

Donald R. Clark
EXECUTOR – Donald R. Clark

Ruth A. McCafferty
EXECUTOR – Ruth A. McCafferty

COMMONWEALTH OF PENNSYLVANIA)SS:
COUNTY OF BUTLER)

Before me, the subscriber, a Notary Public in and for said Commonwealth and County, personally appeared the above named Estate of Jean M. Clark, who acknowledged the foregoing release and dedication and plan of subdivision to be their act and deed and desired the same to be recorded as such.

* BY DONALD CLARK AND RUTH MCCAFFERTY, EXECUTORS.

Sworn to and subscribed before me this 14 day of Aug 2017.

My Commission expires the 23 day of Aug 2017.

SEAL
Patricia Saunders
NOTARY PUBLIC

NOTARIAL SEAL
PATRICIA SAUNDERS
Notary Public
CENTER TWP BUTLER COUNTY
My Commission Expires Aug 23 2017

I, Cheryl A. Hughes, a Registered Professional Land Surveyor of the Commonwealth of Pennsylvania, do hereby certify that this plan correctly represents the lots, lands, streets, alleys, rights-of-way and highways as surveyed and platted by me for the Owners, developers or agents.

August 3, 2017 SEAL
DATE

Cheryl A. Hughes
REGISTRATION NUMBER SU-32490-E

This plat of subdivision has been approved by the Planning Commision of the Township of Center, Butler County, Pennsylvania on this 26th day of July, 2017.

CHAIRMAN SEAL SECRETARY

The Board of Supervisors of the Township of Center, Butler County, Pennsylvania, hereby gives public notice that it is approving this plan of subdivision for recording purposes only. The approval of this subdivision plat by the Township of Center does not constitute an acceptance of the roads, streets, alleys, storm water and sanitary sewage drainage facilities, easements or rights-of-way, water mains or any other services or improvements shown on this plan nor an assumption of maintenance responsibility, nor will the same be accepted or maintained until constructed in accordance with all Township Specification and requirements and officially accepted by action of the Board of Supervisors.

This plat of subdivision approved by resolution of the Board of Supervisors of the Township of Center, Butler County, Pennsylvania on this 9th day of August, 2017.

Edward B. Latuska
CHAIRMAN SEAL SECRETARY

Reviewed with comments by the Butler County Planning Commission. Letter to Center Township Board of Supervisors dated this 9TH day of AUGUST, 2017.

BUTLER COUNTY PLANNING COMMISSION

CHAIRMAN SEAL SECRETARY

COMMONWEALTH OF PENNSYLVANIA)SS:
COUNTY OF BUTLER)

Recorded in the office for the recording of deeds, plats, etc. in said County, in Plan Book Volume 365 page 40.

Given under my hand and seal this 28 day of AUGUST 2017.

SEAL
RECORDER

MICHELE M. MUSTELLO
RECORDER OF DEEDS
My Commission Expires First Monday in January 2020

RECORDER OF DEEDS
BUTLER COUNTY, PA

AS OF THE DATE OF THIS DEED/PLOT PLAN/DEED NOTICE RECORDING, THE PROPERTY/SUBDIVISION DESCRIBED HEREON IS AND SHALL BE DEDICATED FOR THE EXPRESS PURPOSE OF SILVICULTURE USE. THIS WAIVER APPLIES TO LOT 2 OF THE PLAN AS SHOWN HEREON. NO PORTION OF THIS PROPERTY/SUBDIVISION HAS BEEN APPROVED BY CENTER TOWNSHIP OR THE DEPARTMENT OF ENVIRONMENTAL PROTECTION FOR THE INSTALLATION OF SEWAGE DISPOSAL FACILITIES. NO SEWAGE PERMIT WILL BE ISSUED FOR THE INSTALLATION, CONSTRUCTION, CONNECTION TO OR USE OF ANY SEWAGE COLLECTION, CONVEYANCE, TREATMENT OR DISPOSAL SYSTEM (EXCEPT FOR REPAIRS TO EXISTING SYSTEMS) UNLESS THE MUNICIPALITY AND THE DEP HAVE BOTH APPROVED SEWAGE FACILITIES PLANNING FOR THE PROPERTY/SUBDIVISION HEREIN IN ACCORDANCE WITH THE PENNSYLVANIA SEWAGE FACILITIES ACT (35 P.S. SECTIONS 750.1 ET.SEQ.) AND REGULATIONS PROMULGATED THEREUNDER. PRIOR TO SIGNING, EXECUTING, IMPLEMENTING OR RECORDING ANY SALES CONTRACT OR SUBDIVISION PLAN, ANY PURCHASER OR SUBDIMDER OF ANY PORTION OF LOT 2 SHOULD CONTACT APPROPRIATE OFFICIALS OF CENTER TOWNSHIP, WHICH IS CHARGED WITH ADMINISTERING THE SEWAGE FACILITIES ACT TO DETERMINE WHAT SEWAGE FACILITIES PLANNING IS REQUIRED AND THE PROCEDURE AND REQUIREMENTS FOR OBTAINING APPROPRIATE PERMITS OR APPROVALS.

NOTES:

SUBJECT TO ANY AND ALL EXISTING RIGHTS-OF-WAY AND EASEMENTS OF RECORD.

ACCORDING TO THE FLOOD INSURANCE RATE MAP PREPARED FOR THIS TOWNSHIP, THIS PROPERTY LIES IN ZONE X – AREAS DETERMINED TO BE OUTSIDE THE 500 YEAR FLOOD PLAIN.

ZONING: R-1A SINGLE FAMILY RESIDENTIAL-AGRICULTURAL W/DM OVERLAY

50' FRONT BUILDING LINE
30' SIDE BUILDING LINE
50' REAR BUILDING LINE

PROPERTY OWNER: ESTATE OF JEAN M. CLARK
c/o DONALD R. CLARK
500 WEST SUNBURY ROAD
BUTLER, PA 16001

REVISED 08/03/17; ENGINEER'S REVIEW COMMENTS

Land Surveyors, Inc.
523 North Main Street
P.O. Box 1061
Butler, PA 16003-1061
(724) 287-6865
Cheryl A. Hughes, PLS Owner

PLAN OF SUBDIVISION

FOR: ESTATE OF JEAN M. CLARK

SITUATE: CENTER TWP., BUTLER CO., PA

Date 07/05/17	Scale 1" = 100'	Dwn By BEC	Ckd By CAH
Parcel No. 060-2F61-24		Db-Pg 2798-6	Service No. 17-029
Address 500/503 W. SUNBURY RD.			

PLAN BOOK	PAGE
365	40

COMMONWEALTH OF PENNSYLVANIA
REGISTERED PROFESSIONAL
Cheryl A. Hughes
LAND SURVEYOR
SU-32490-E

Instr:201708280018262 08/28/2017 2:54PM
Pages:1 F:$45.00 T20170013032
Michele Mustello FL
Butler County Recorder

KNOW ALL MEN BY THESE PRESENTS That We, CARL LEHNERD, and JON W. DISHER, of the Township of Jefferson, County of Butler, and Commonwealth of Pennsylvania, for ourselves, our heirs, executors, administrators and assigns, do hereby adopt this as our plan of lots of our property, situate in the Township of Jefferson, County of Butler and Commonwealth of Pennsylvania, and for divers advantages accruing to us, do hereby dedicate forever, for public use for highway purposes, all slope areas drives, roads, streets, lanes and ways, and other public highways shown upon the plan, with the same force and effect as if the same had been opened through legal proceedings, and in the consideration of the approval of said plan, and any future acceptance of said public highways by the Commonwealth of Pennsylvania, County of Butler and Township of Jefferson, we hereby covenant and agree to and by these presents do release and forever discharge the Commonwealth of Pennsylvania, County of Butler and Township of Jefferson, their successors and assigns from any liability for damages arising and to arise from any appropriation of said ground for public highways and the physical grading thereof to any grades that may be established hereafter at any time. This dedication and release shall be binding upon the above named property owners, their heirs, executors, administrators and assigns and purchasers of lots in this plan.

IN WITNESS WHEREOF, We hereunto set our hand and seal this 4TH day of August 2017.

CARL LEHNERD

JON W. DISHER

COMMONWEALTH OF PENNSYLVANIA : SS
COUNTY OF BUTLER :

Before me, the subscriber, a Notary Public in and for said Commonwealth and County, personally appeared CARL LEHNERD, and JON W. DISHER and acknowledged the foregoing release and dedication and plan to be their act and deed and desire the same to be recorded as such.

WITNESS MY HAND AND NOTARIAL SEAL this 4TH day of AUGUST 2017.

Notary Public Seal & Stamp

COMMONWEALTH OF PENNSYLVANIA
Notarial Seal
Debra L. Jeffcoat, Notary Public
Jefferson Township, Butler County
My Commission Expires February 17, 2019

I, Stanley D. Graff, a Registered Professional Surveyor of the Commonwealth of Pennsylvania, do hereby certify, to the best of my knowledge, that this plan as shown hereon is based upon actual field survey of the land described and that all angles, distances and courses are correctly shown, that the monuments and markers have been set as shown on the plan, and that this plan correctly represents the lots, lands, streets and highways as surveyed by others and plotted by me for the owners or agents.

17TH July '17
Date

Seal

P. L. S. # 30161-E

COMMONWEALTH OF PENNSYLVANIA REGISTERED PROFESSIONAL STANLEY D. GRAFF LAND SURVEYOR NO. 30161-E

JEFFERSON TOWNSHIP

The Board of Supervisors of the Township of Jefferson, hereby gives public notice that in approving this plan for recording purposes only, the Township of Jefferson assumes no obligations, legal or otherwise, expressed or implied either to accept said streets as Township streets or roads or grade, pave and curb the street in said plan, or to construct sewers therein or to install any other such service ordinarily installed in Township streets or roads.

Approved by the Supervisors of the Township of Jefferson this 14th day of Aug. 2017.

Secretary Seal Chairman

Approved by the Jefferson Township Planning Commission this 27TH day of July 2017.

Secretary Chairman

BUTLER COUNTY PLANNING COMMISSION

Reviewed by the Butler County Planning Commission this 17TH day of July 2017.

Secretary Seal Chairman

COMMONWEALTH OF PENNSYLVANIA : SS
COUNTY OF BUTLER :

Recorded in the Recorder's Office for the recording of deeds, plans, etc., in said County in Plan Book Volume 365 Page 41.

Given under my hand and seal this 1ST day of September 2017.

Recorder Seal

MICHELE M. MUSTELLO
RECORDER OF DEEDS
My Commission Expires First Monday in January 2020

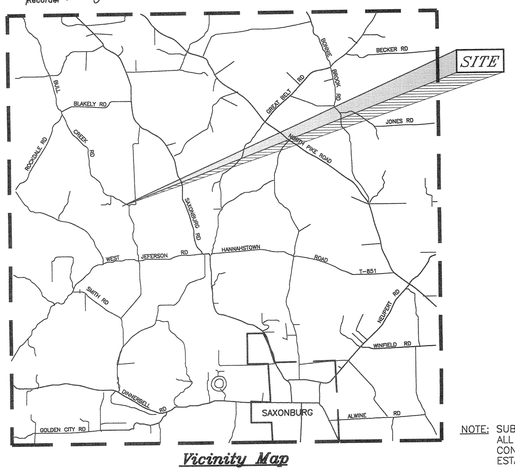

Vicinity Map
NOT TO SCALE

NOTE: SUBJECT TO AND TOGETHER WITH ANY AND ALL EXISTING RIGHTS-OF-WAY, EASEMENTS AND CONDITIONAL CLAUSES OF RECORD OR ESTABLISHED BY DUE PROCESS.

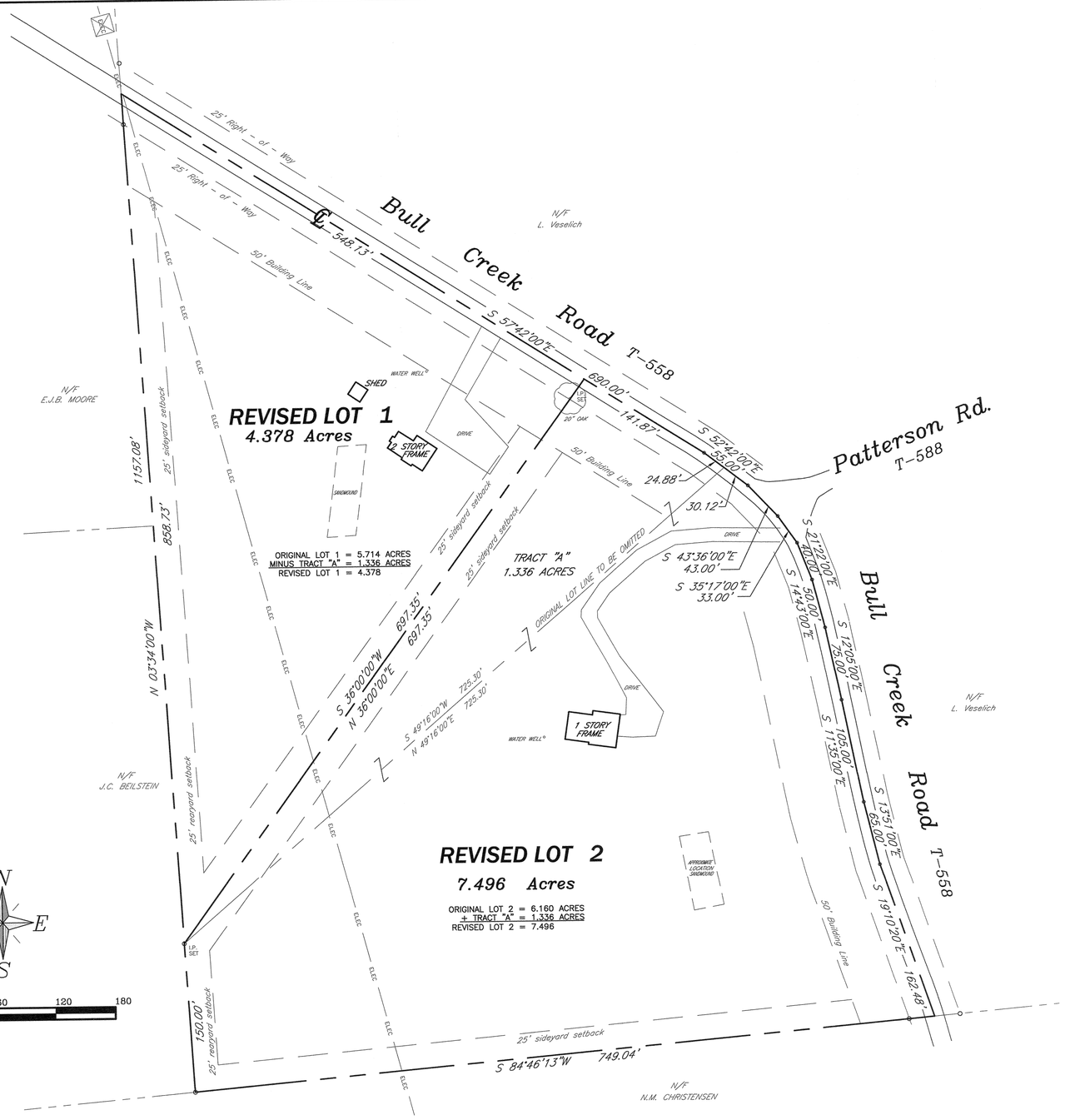

NOTES:

1) OWNER: CARL LEHNERD
272 BULLCREEK ROAD
BUTLER, PA. 16002

OWNER: JON W. DISHER
274 BULLCREEK ROAD
BUTLER, PA. 16002

2) PROPERTY USE - RESIDENTIAL

3) PROPERTY SETBACKS: FRONT = 50'
SIDE = 25'
REAR = 25'

CARL LEHNERD PLAN

Being a lot line revision of
Lots 1 and 2 of the L. VESELICH PLAN Plan / rack file 244 page 42

Instr:201709010019715 09/01/2017
Pages:1 F:$45.00 12:06PM
Michele Mustello T20170013340
Butler County Recorder FL

RECORDED 20
PLAN BOOK PAGE
PLAN BOOK 365 PAGE 41
SHEET ____ of ____

REV	DESCRIPTION	BY	DATE

GRAFF SURVEYING

GRAFF SURVEYING LLC
PO BOX 521 | SAXONBURG, PA 16056
P: 724-352-3811 F: 724-352-1059
INFO@GRAFFSURVEYING.COM
WWW.GRAFFSURVEYING.COM

PROJECT DESCRIPTION
CARL LEHNERD PLAN
BEING A
LOT LINE REVISION
FOR
CARL LEHNERD AND
JON W. DISHER

SITUATE
TOWNSHIP OF JEFFERSON
BUTLER COUNTY, PENNSYLVANIA

DATE	DRAWN	CHECKED	SCALE
7/17/17	SDG	Sdg	1" = 60'

PROJECT NO.	TAX PARCEL NO.	REVISION
17-150	190-2F12-35A & 35B	-

OWNER'S ADOPTION

KNOW ALL MEN BY THESE PRESENTS THAT WE, MERLIN D. & GRACE J. GRABE, OF THE TOWNSHIP OF JEFFERSON, COUNTY OF BUTLER AND COMMONWEALTH OF PENNSYLVANIA, FOR OURSELVES, OUR HEIRS, EXECUTORS, ADMINISTRATORS AND ASSIGNS, DO HEREBY ADOPT THIS AS OUR PLAN OF LOTS OF OUR PROPERTIES, SITUATE IN THE TOWNSHIP OF JEFFERSON, COUNTY OF BUTLER AND COMMONWEALTH OF PENNSYLVANIA, AND FOR DIVERS ADVANTAGES ACCRUING TO US, DO HEREBY DEDICATE FOREVER, FOR PUBLIC USE FOR HIGHWAY PURPOSES, ALL SLOPE AREAS, DRIVES, ROADS, STREETS, LANES AND WAYS, AND OTHER PUBLIC HIGHWAYS SHOWN UPON THE PLAN, WITH THE SAME FORCE AND EFFECT AS IF THE SAME HAD BEEN OPENED THROUGH LEGAL PROCEEDINGS, AND IN THE CONSIDERATION OF THE APPROVAL OF SAID PLAN, AND ANY FUTURE ACCEPTANCE OF SAID PUBLIC HIGHWAYS BY THE COMMONWEALTH OF PENNSYLVANIA, COUNTY OF BUTLER AND TOWNSHIP OF JEFFERSON, WE HEREBY COVENANT AND AGREE TO AND BY THESE PRESENTS DO RELEASE AND FOREVER DISCHARGE THE COMMONWEALTH OF PENNSYLVANIA, COUNTY OF BUTLER AND TOWNSHIP OF JEFFERSON, THEIR SUCCESSORS AND ASSIGNS FROM ANY LIABILITY FOR DAMAGES ARISING AND TO ARISE FROM ANY APPROPRIATION OF SAID GROUND FOR PUBLIC HIGHWAYS AND THE PHYSICAL GRADING THEREOF TO ANY GRADES THAT MAY BE ESTABLISHED HEREAFTER AT ANY TIME. THIS DEDICATION AND RELEASE SHALL BE BINDING UPON THE ABOVE NAMED PROPERTY OWNERS, THEIR HEIRS, EXECUTORS, ADMINISTRATORS AND ASSIGNS AND PURCHASERS OF LOTS IN THIS PLAN.

IN WITNESS WHEREOF, WE HEREUNTO SET OUR HAND AND SEAL THIS 3RD DAY OF AUGUST, 2017.

x Merlin D. Grabe
MERLIN D. GRABE

x Grace J. Grabe
GRACE J. GRABE

ACKNOWLEDGMENT OF NOTARY PUBLIC

BEFORE ME, THE SUBSCRIBER, A NOTARY PUBLIC IN AND FOR THE COMMONWEALTH OF PENNSYLVANIA AND COUNTY OF BUTLER, PERSONALLY APPEARED THE ABOVE NAMED, MERLIN D. & GRACE J. GRABE AND ACKNOWLEDGED THE FOREGOING RELEASE AND DEDICATION OF PLAN TO BE THEIR ACT AND DEED AND DESIRED THE SAME TO BE RECORDED AS SUCH.

SWORN TO AND SUBSCRIBED BEFORE ME THIS 3RD DAY OF AUGUST, 2017.

MY COMMISSION EXPIRES THE 17TH DAY OF FEBRUARY, 2019

Nikki L. Jeffcoat
NOTARY PUBLIC

COMMONWEALTH OF PENNSYLVANIA
Notarial Seal
Debra L. Jeffcoat, Notary Public
Jefferson Township, Butler County
My Commission Expires February 17, 2019

SURVEYOR'S CERTIFICATION

I, STANLEY D. GRAFF, A REGISTERED SURVEYOR OF THE COMMONWEALTH OF PENNSYLVANIA, DO HEREBY CERTIFY, TO THE BEST OF MY KNOWLEDGE, THAT THIS PLAN AS SHOWN HEREON IS BASED UPON ACTUAL FIELD SURVEY OF THE LAND DESCRIBED AND THAT ALL ANGLES, DISTANCES AND COURSES ARE CORRECTLY SHOWN, THAT THE MONUMENTS AND MARKERS HAVE BEEN SET AS SHOWN ON THE PLAN, AND THAT THE PLAN CORRECTLY REPRESENTS THE LOTS, LANDS, STREETS AND HIGHWAYS AS SURVEYED AND PLOTTED BY ME FOR THE OWNERS OR AGENTS.

27 July '17
DATE

STANLEY D. GRAFF
REG. NO. SU-060154-E

COMMONWEALTH OF PENNSYLVANIA — REGISTERED PROFESSIONAL — STANLEY D. GRAFF — LAND SURVEYOR NO. 060154-E

MUNICIPAL DECLARATIONS

THE BOARD OF SUPERVISORS OF THE TOWNSHIP OF JEFFERSON, HEREBY GIVES PUBLIC NOTICE THAT IN APPROVING THIS PLAN FOR RECORDING PURPOSES ONLY, THE TOWNSHIP OF JEFFERSON ASSUMES NO OBLIGATIONS, LEGAL OR OTHERWISE, EXPRESSED OR IMPLIED EITHER TO ACCEPT SAID STREETS AS TOWNSHIP STREETS OR ROADS OR GRADE, PAVE AND CURB THE STREETS IN SAID PLAN, OR TO CONSTRUCT SEWERS THEREIN OR TO INSTALL ANY OTHER SUCH SERVICE ORDINARILY INSTALLED IN TOWNSHIP STREETS OR ROADS.

MUNICIPAL REVIEW AND APPROVAL STATEMENTS

APPROVED BY THE BOARD OF SUPERVISORS OF THE TOWNSHIP OF JEFFERSON THIS 14TH DAY OF Aug., 2017 .

SECRETARY

CHAIRMAN, BOARD OF SUPERVISORS

REVIEWED BY THE PLANNING COMMISSION OF THE TOWNSHIP OF JEFFERSON THIS 27TH DAY OF JULY, 2017 .

SECRETARY

CHAIRMAN, PLANNING COMMISSION

BUTLER COUNTY PLANNING COMMISSION REVIEW STATEMENT

REVIEWED BY THE BUTLER COUNTY PLANNING COMMISSION ON THIS 19TH DAY OF July, 2017.

SECRETARY

CHAIRMAN, BUTLER COUNTY PLANNING COMMISSION

BUTLER COUNTY PLANNING COMMISSION

PROOF OF RECORDING

RECORDED IN THE OFFICE OF THE RECORDER OF DEEDS OF THE COUNTY OF BUTLER, COMMONWEALTH OF PENNSYLVANIA, IN PLAN BOOK VOLUME 365 PAGE(S) 42.

GIVEN UNDER MY HAND AND SEAL THIS 1st DAY OF September, 2017.

RECORDER OF DEEDS

MICHELE M. MUSTELLO
RECORDER OF DEEDS
My Commission Expires First Monday in January 2020

MICHELE M. MUSTELLO — RECORDER OF DEEDS — BUTLER COUNTY, PA

OWNER'S ADOPTION

KNOW ALL MEN BY THESE PRESENTS THAT WE, DONALD E. & DIANA M. LEHNERD, OF THE TOWNSHIP OF JEFFERSON, COUNTY OF BUTLER AND COMMONWEALTH OF PENNSYLVANIA, FOR OURSELVES, OUR HEIRS, EXECUTORS, ADMINISTRATORS AND ASSIGNS, DO HEREBY ADOPT THIS AS OUR PLAN OF LOTS OF OUR PROPERTIES, SITUATE IN THE TOWNSHIP OF JEFFERSON, COUNTY OF BUTLER AND COMMONWEALTH OF PENNSYLVANIA, AND FOR DIVERS ADVANTAGES ACCRUING TO US, DO HEREBY DEDICATE FOREVER, FOR PUBLIC USE FOR HIGHWAY PURPOSES, ALL SLOPE AREAS, DRIVES, ROADS, STREETS, LANES AND WAYS, AND OTHER PUBLIC HIGHWAYS SHOWN UPON THE PLAN, WITH THE SAME FORCE AND EFFECT AS IF THE SAME HAD BEEN OPENED THROUGH LEGAL PROCEEDINGS, AND IN THE CONSIDERATION OF THE APPROVAL OF SAID PLAN, AND ANY FUTURE ACCEPTANCE OF SAID PUBLIC HIGHWAYS BY THE COMMONWEALTH OF PENNSYLVANIA, COUNTY OF BUTLER AND TOWNSHIP OF JEFFERSON, WE HEREBY COVENANT AND AGREE TO AND BY THESE PRESENTS DO RELEASE AND FOREVER DISCHARGE THE COMMONWEALTH OF PENNSYLVANIA, COUNTY OF BUTLER AND TOWNSHIP OF JEFFERSON, THEIR SUCCESSORS AND ASSIGNS FROM ANY LIABILITY FOR DAMAGES ARISING AND TO ARISE FROM ANY APPROPRIATION OF SAID GROUND FOR PUBLIC HIGHWAYS AND THE PHYSICAL GRADING THEREOF TO ANY GRADES THAT MAY BE ESTABLISHED HEREAFTER AT ANY TIME. THIS DEDICATION AND RELEASE SHALL BE BINDING UPON THE ABOVE NAMED PROPERTY OWNERS, THEIR HEIRS, EXECUTORS, ADMINISTRATORS AND ASSIGNS AND PURCHASERS OF LOTS IN THIS PLAN.

IN WITNESS WHEREOF, WE HEREUNTO SET OUR HAND AND SEAL THIS 4TH DAY OF AUGUST, 2017.

x Donald E. Lehnerd
DONALD E. LEHNERD

x Diana M. Lehnerd
DIANA M. LEHNERD

ACKNOWLEDGMENT OF NOTARY PUBLIC

BEFORE ME, THE SUBSCRIBER, A NOTARY PUBLIC IN AND FOR THE COMMONWEALTH OF PENNSYLVANIA AND COUNTY OF BUTLER, PERSONALLY APPEARED THE ABOVE NAMED, DONALD E. & DIANA M. LEHNERD AND ACKNOWLEDGED THE FOREGOING RELEASE AND DEDICATION OF PLAN TO BE THEIR ACT AND DEED AND DESIRED THE SAME TO BE RECORDED AS SUCH.

SWORN TO AND SUBSCRIBED BEFORE ME THIS 4TH DAY OF AUGUST, 2017.

MY COMMISSION EXPIRES THE 17TH DAY OF FEBRUARY, 2019

Nikki L. Jeffcoat
NOTARY PUBLIC

COMMONWEALTH OF PENNSYLVANIA
Notarial Seal
Debra L Jeffcoat, Notary Public
Jefferson Township, Butler County
My Commission Expires February 17, 2019

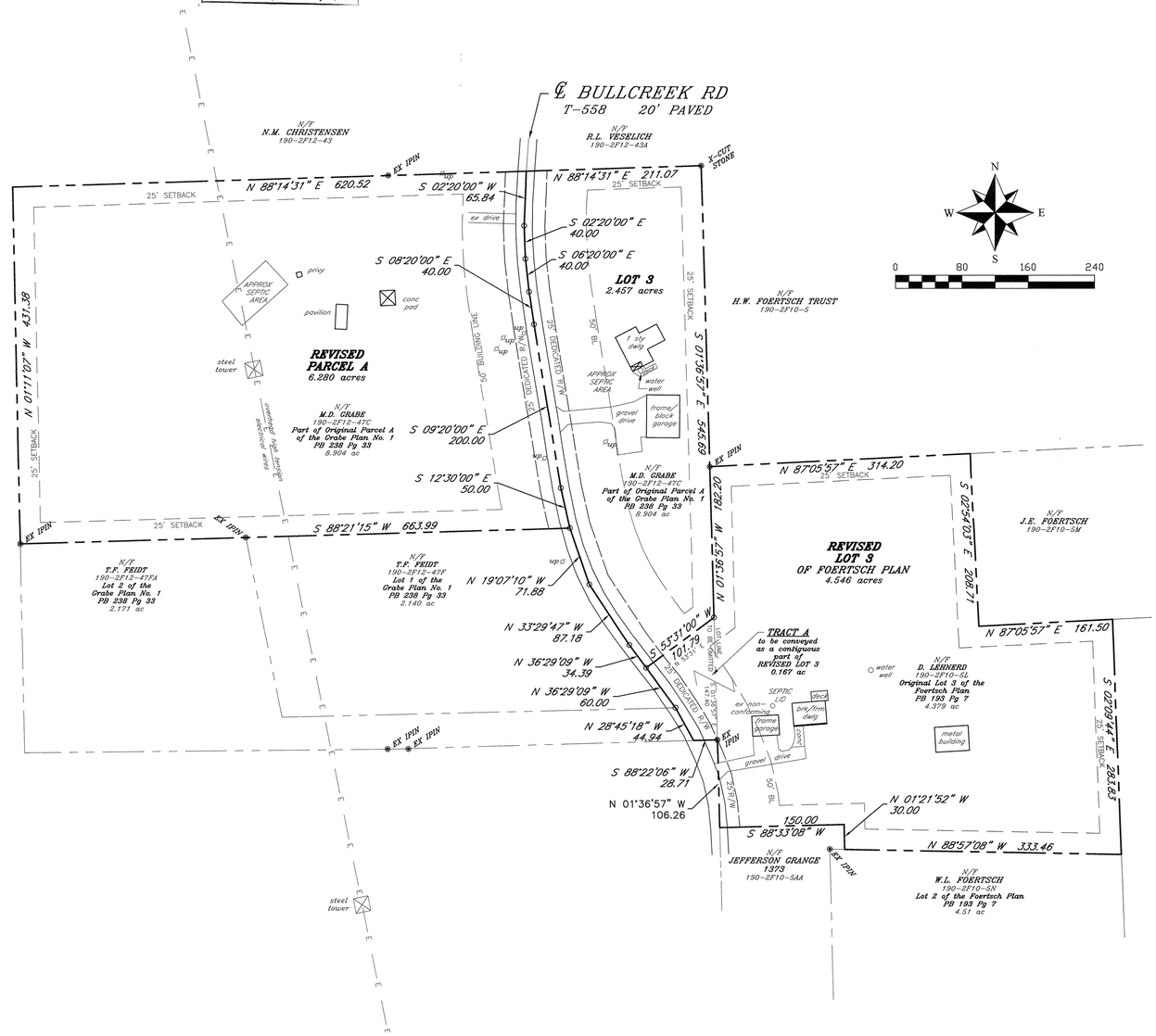

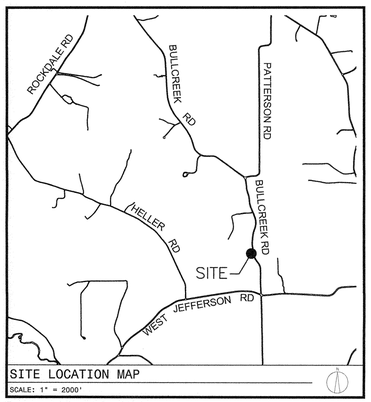

SITE LOCATION MAP

SCALE: 1" = 2000'

NOTE: SUBJECT TO AND TOGETHER WITH ANY AND ALL EXISTING RIGHTS-OF-WAY, EASEMENTS AND CONDITIONAL CLAUSES OF RECORD OR ESTABLISHED BY DUE PROCESS.

Instr: 201709010018716 09/01/2017
Pages: 1 F: $45.00 12:05PM
Michele Mustello T20170013340
Butler County Recorder FL

PROPERTY AREAS:	
EXISTING TOTALS	
Parcel A	8.904 acres
+Ex. Lot 3 (of Foertsch Plan)	4.379 acres
EXISTING TOTAL	13.283 acres
LOT 3	
Original Parcel A	8.904 acres
- Revised Parcel A	6.280 acres
- Tract A	0.167 acres
LOT 3	2.457 acres
REVISED PARCEL A	
Original Parcel A	8.904 acres
- Lot 3	2.457 acres
- Tract A	0.167 acres
REVISED PARCEL A	6.280 acres
REVISED LOT 3 (of Foertsch Plan)	
Existing Lot 3 (of Foertsch Plan)	4.379 acres
+ Tract A	0.167 acres
REVISED LOT 3 (of Foertsch Plan)	4.546 acres
REVISED TOTALS	
Lot 3	2.457 acres
Revised Parcel A	6.280 acres
+Revised Lot 3 (of Foertsch Plan)	4.546 acres
REVISED TOTAL	13.283 acres

REFERENCES:

GRABE SUBDIVISION #1
PLAN BOOK 238 PAGE 33

FOERTSCH LOT LINE REVISION
PLAN BOOK 193 PAGE 7

GENERAL NOTES:

1. OWNERS: 190-2F12-47C - MERLIN D. & GRACE J. GRABE
   190-2F10-5L - DONALD E. & DIANA M. LEHNERD
2. SETBACKS: FRONT LINE - 50'
   BACK & SIDE - 25'
3. REFERENCES
   3.1. CURRENT DEEDS OF RECORD
   3.2. PREVIOUSLY RECORDED PLANS
   3.2.1. GRABE SUBDIVISION #1
   PLAN BOOK 238 PG 33
   3.2.2. FOERTSCH LOT LINE REVISION
   PLAN BOOK 193 PG 7

REV	DESCRIPTION	BY	DATE
A	REVISE LOT NAMES PER TOWNSHIP RECOMMENDATION	SDG	7/26/2017

GRAFF SURVEYING

GRAFF SURVEYING LLC
PO BOX 521 | SAXONBURG, PA 16056
P: 724-352-3811 F: 724-352-1059
INFO@GRAFFSURVEYING.COM
WWW.GRAFFSURVEYING.COM

PROJECT DESCRIPTION

GRABE PLAN NO. 2

BEING A

SUBDIVISION

FOR

MERLIN & GRACE GRABE
DONALD & DIANA LEHNERD

SITUATE

TOWNSHIP OF JEFFERSON
BUTLER COUNTY, PENNSYLVANIA

DATE	DRAWN	CHECKED	SCALE
7/5/17	SDG	Sdg	1" = 80'

PROJECT NO.	TAX PARCEL NO.	REVISION
17-096	190-2F12-47C & 2F10-5L	A

Grabe Plan No. 2

Being a:
1. Subdivision of Butler County Tax Parcel 190-2F12-47C
2. Lot line revision of Butler County Tax Parcels 190-2F12-47C and 190-2F10-5L

RECORDED _____ 20__

PLAN BOOK	PAGE
365	42

SHEET _____ of _____

OWNER'S ADOPTION

I, SHAMUS C. O'DONNELL, OWNER OF THE LAND SHOWN ON THE S. O'DONNELL PLAN, HEREBY ADOPT THIS PLAN AS MY PLAN OF LOTS AND IRREVOCABLY DEDICATE ALL STREET AND OTHER PROPERTY IDENTIFIED FOR DEDICATION ON THE PLAN TO THE PUBLIC. ANY FUTURE ACCEPTANCE OF SAID PUBLIC STREETS OR PROPERTY BY THE COMMONWEALTH OF PENNSYLVANIA, COUNTY OF BUTLER, AND TOWNSHIP OF MIDDLESEX, I HEREBY COVENANT AND AGREE TO AND BY THESE PRESENTS DO RELEASE AND FOREVER DISCHARGE SAID COMMONWEALTH OF PENNSYLVANIA, COUNTY OF BUTLER AND TOWNSHIP OF MIDDLESEX, THEIR SUCCESSORS OR ASSIGNS FROM ANY LIABILITY FOR DAMAGES ARISING AND TO ARISE FROM ANY APPROPRIATION OF SAID GROUND FOR PUBLIC STREETS OR PROPERTY AND THE PHYSICAL GRADING THEREOF TO ANY GRADES THAT MAY BE ESTABLISHED. THIS ADOPTION AND DEDICATION SHALL BE BINDING UPON MY HEIRS, EXECUTORS, AND ASSIGNS.

SHAMUS C. O'DONNELL

ACKNOWLEDGMENT OF NOTARY PUBLIC

BEFORE ME, THE UNDERSIGNED NOTARY PUBLIC IN AND FOR THE COMMONWEALTH OF PENNSYLVANIA AND COUNTY OF BUTLER, PERSONALLY APPEARED THE ABOVE NAMED, SHAMUS C. O'DONNELL, AND ACKNOWLEDGED THE FOREGOING ADOPTION, DEDICATION AND PLAN TO BE HIS ACT AND DESIRED THE SAME TO BE RECORDED AS SUCH.

WITNESS MY HAND AND NOTARIAL SEAL THIS 1 DAY OF SEPTEMBER, 2017.

MY COMMISSION EXPIRES THE 17 DAY OF FEBRUARY 2019

COMMONWEALTH OF PENNSYLVANIA
Notarial Seal
Debra L. Jeffcoat, Notary Public
Jefferson Township, Butler County
My Commission Expires February 17, 2019

NOTARY PUBLIC

CERTIFICATION OF TITLE (NO MORTGAGE)

I, SHAMUS C. O'DONNELL , HEREBY CERTIFY THAT THE TITLE TO THE PROPERTY CONTAINED IN THE S. O'DONNELL PLAN IS IN THE NAME OF SHAMUS C. O'DONNELL AND IS RECORDED IN INSTRUMENT NUMBER 201602250003602. I FURTHER CERTIFY THAT THERE IS NO MORTGAGE, LIEN, OR OTHER ENCUMBRANCE AGAINST THE PROPERTY.

WITNESS OWNER

CERTIFICATION OF TITLE (MORTGAGE)

I, SHAMUS C. O'DONNELL , HEREBY CERTIFY THAT THE TITLE TO THE PROPERTY CONTAINED IN THE S. O'DONNELL PLAN IS IN THE NAME OF SHAMUS C. O'DONNELL AND IS RECORDED IN INSTRUMENT NUMBER 201602250003602.

WITNESS OWNER

_____ (NAME OF MORTGAGEE), MORTGAGEE OF THE PROPERTY CONTAINED IN THE S. O'DONNELL PLAN CONSENTS TO THE RECORDING OF SAID PLAN AND TO THE DEDICATIONS AND ALL OTHER MATTERS APPEARING ON THE PLAN.

WITNESS NAME, TITLE, AND MORTGAGEE

SURVEYOR'S CERTIFICATION

I CERTIFY THAT, TO THE BEST OF MY KNOWLEDGE, THAT THE SURVEY AND PLAN SHOWN HEREON CORRECTLY REPRESENTS THE LOTS, LANDS, STREETS AND HIGHWAYS AS SURVEYED AND PLOTTED BY ME.

23 Aug 17
DATE

STANLEY D. GRAFF
REG. NO. SU-030561-E

COMMONWEALTH OF PENNSYLVANIA — REGISTERED PROFESSIONAL — STANLEY D. GRAFF — LAND SURVEYOR — NO. 030561-E

MUNICIPAL DECLARATIONS

THE BOARD OF SUPERVISORS OF THE TOWNSHIP OF MIDDLSEX, HEREBY GIVES NOTICE THAT IN APPROVING THIS PLAN FOR RECORDING, THE TOWNSHIP OF MIDDLESEX HAS NOT ACCEPTED DEDICATION OF ANY STREETS, LAND OR PUBLIC FACILITIES AND HAS NO OBLIGATION TO IMPROVE OR MAINTAIN SUCH STREETS, LAND OR FACILITIES.

SECRETARY CHAIRMAN, BOARD OF SUPERVISORS

MUNICIPAL REVIEW AND APPROVAL STATEMENTS

APPROVED BY THE BOARD OF SUPERVISORS OF THE TOWNSHIP OF MIDDLESEXBY RESOLUTION NO. 19of2017 EFFECTIVE THIS 23rd DAY OF August 2017 .

SECRETARY CHAIRMAN, BOARD OF SUPERVISORS

REVIEWED BY THE PLANNING COMMISSION OF THE TOWNSHIP OF MIDDLESEX THIS 22nd DAY OF August 2017 .

SECRETARY CHAIRMAN

THE TOWNSHIP OF MIDDLESEX — THE COMMONWEALTH OF PENNSYLVANIA — BUTLER COUNTY

I, Jeffrey Mikesic A REGISTERED PROFESSIONAL ENGINEER, THE TOWNSHIP ENGINEER FOR MIDDLESEX TOWNSHIP, DO HEREBY CERTIFY THAT THIS SUBDIVISION PLAN MEETS ALL THE ENGINEERING AND DESIGN REQUIREMENTS OF THE TOWNSHIP SUBDIVISION AND ZONING ORDINANCE EXCEPT AS DEPARTURES HAVE BEEN AUTHORIZED BY THE APPROVAL AUTHORITY.

TOWNSHIP ENGINEER PE083712 REGISTRATION NO. 9/25/17 DATE

COMMONWEALTH OF PENNSYLVANIA — REGISTERED PROFESSIONAL — JEFFREY A. MIKESIC — ENGINEER — PE083712

BUTLER COUNTY PLANNING COMMISSION REVIEW STATEMENT

REVIEWED BY THE BUTLER COUNTY PLANNING COMMISSION ON THIS 3RD DAY OF AUGUST 2017.

SECRETARY Chuck Dawks CHAIRMAN, BUTLER COUNTY PLANNING COMMISSION Frank E Ulbl SEAL

BUTLER COUNTY PLANNING COMMISSION

PROOF OF RECORDING

RECORDED IN THE OFFICE OF THE RECORDER OF DEEDS OF THE COUNTY OF BUTLER, COMMONWEALTH OF PENNSYLVANIA, IN PLAN BOOK VOLUME 365 , PAGE(S) 43 .

GIVEN UNDER MY HAND AND SEAL THIS 13th DAY OF September 2017.

RECORDER OF DEEDS

MICHELE M. MUSTELLO
RECORDER OF DEEDS
My Commission Expires First Monday in January 2020

RECORDER OF DEEDS — BUTLER COUNTY, PA

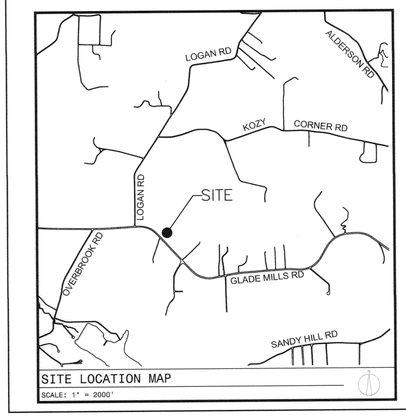

SITE LOCATION MAP
SCALE: 1" = 2000'

HIGHWAY OCCUPANCY PERMIT:
A HIGHWAY OCCUPANCY PERMIT IS REQUIRED PURSUANT TO SECTION 420 OF THE STATE HIGHWAY LAW (P.L. 1242, NO. 428).

NOTE: SUBJECT TO AND TOGETHER WITH ANY AND ALL EXISTING RIGHTS-OF-WAY, EASEMENTS AND CONDITIONAL CLAUSES OF RECORD OR ESTABLISHED BY DUE PROCESS.

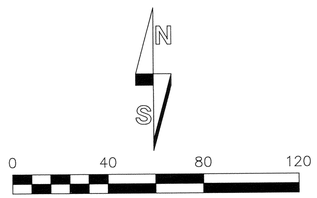

PROPERTY AREAS:

EXISTING TOTALS	
LOT 1 (230-S11-E1)	1.154 ACRES
+LOT 5 (230-S11-E5)	1.423 ACRES
EXISTING TOTAL	2.577 ACRES
REVISED TOTALS	
REVISED LOT 1	2.577 ACRES

GENERAL NOTES:

1. OWNERS: SHAMUS C. O'DONNELL
2. ZONING: AG-A RURAL RESIDENTIAL
3. REFERENCES
   - 3.1. CURRENT DEEDS OF RECORD
   - 3.2. PREVIOUSLY RECORDED PLANS
     - 3.2.1. G.J. CLIFFORD PLAN PLAN BOOK 235 PG 7
     - 3.2.2. EARDLEY FARM PLAN OF LOTS NO. 1 OF TRACT 6 SECTION 68 PG 48

ZONING REQUIREMENTS:

MUNICIPALITY: TOWNSHIP OF MIDDLESEX

ZONING DISTRICT: AG-A RURAL RESIDENTIAL DISTRICT

SITE REQUIREMENTS FOR SINGLE FAMILY:
1. MIN. LOT AREA = 1 ACRE 43,560 SQ FT
2. MIN. LOT WIDTH = 150 FT
3. SET BACK REQUIREMENTS
   - 3.1. MIN. FRONT YARD = 50 FT FROM FRONT OR 75 FT FROM CL
   - 3.2. MIN. SIDE YARD = 25 FT DWELLING / 10 FT ACCESSORY STRUCTURE
   - 3.3. MIN. REAR YARD = 75 FT PRINCIPAL / 10 FT ACCESSORY STRUCTURE

S. O'DONNELL PLAN

Being a consolidation of Lots 1 and 5 of Eardley Farm Plan No. 1 of Tract 6, Section 68 Pg 48, and being Butler County Tax Parcels 230-S11-E1 (Lot 1) and 230-S11-E5 (Lot 5)

Instr:201709010018717 09/01/2017
Pages:1 F:$45.00 12:06PM
Michele Mustello T20170013340
Butler County Recorder FL

RECORDED 20	
PLAN BOOK	PAGE
365	43
SHEET of	

REV	DESCRIPTION	BY	DATE
B	REVISION 15' R/W DESCRIPTION	SDG	08/23/2017
A	REVISIONS PER TOWNSHIP ENGINEER REVIEW LETTER DATED AUGUST 9, 2017	SDG	08/09/2017

GRAFF SURVEYING

GRAFF SURVEYING LLC
PO BOX 521 | SAXONBURG, PA 16056
P: 724-352-3811 F: 724-352-1059
INFO@GRAFFSURVEYING.COM
WWW.GRAFFSURVEYING.COM

PROJECT DESCRIPTION

S. O'DONNELL PLAN

BEING A

CONSOLIDATION

FOR

SHAMUS C. O'DONNELL

SITUATE

TOWNSHIP OF MIDDLESEX
BUTLER COUNTY, PENNSYLVANIA

DATE	DRAWN	CHECKED	SCALE
7/27/2017	SDG	Sdg	1" = 40'

PROJECT NO.	TAX PARCEL NO.	REVISION
17-159	230-S11-E1 & E5	B

Development Data:

Zoning:	R-2
Tax Parcel:	40-S15-A-0000
Site Area:	9.60 Ac.
Proposed use:	Single-Family Residential
Allowable Maximum Density:	8.0DU/AC
Lots proposed (Phase IV):	26
Minimum Lot Width:	100' (Single Family Lots)
Minimum Lot Area:	6200SF (Single Family Lots)
Setback:	20'
Minimum Side Yard:	10' (Single Family Lots)
Minimum Rear Yard:	20'

Legend

Phase Line

Easement

Boundary

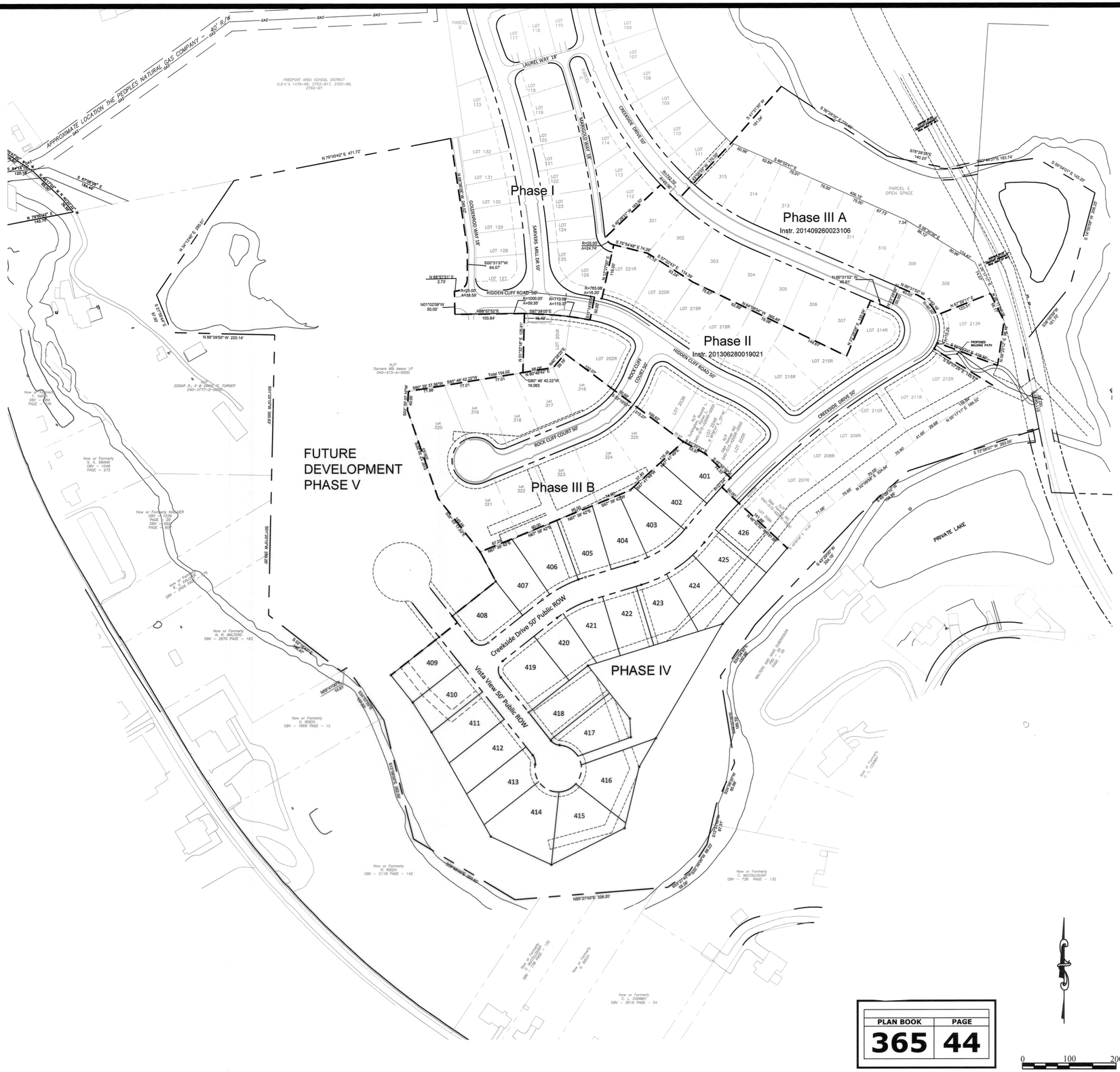
Phase I
Phase II
Instr. 201306280019021
Phase III A
Instr. 201409260023106
Phase III B
PHASE IV
FUTURE DEVELOPMENT PHASE V
HIDDEN CLIFF ROAD 50'
ROCK CLIFF COURT 50'
CREEKSIDE DRIVE 50'
LAUREL WAY 18'
GOLDENROD WAY 18'
SARVER'S MILL DR 50'
Creekside Drive 50' Public ROW
Vista View 50' Public ROW
PRIVATE LANE
PROPOSED WILDING PATH
APPROXIMATE LOCATION THE PEOPLES NATURAL GAS COMPANY — 40' R/W
FREEPORT AREA SCHOOL DISTRICT D.B.V.'s 1475–89, 2753–917, 2792–86, 2792–97
PARCEL E OPEN SPACE
PARCEL D
N 79°00'42" E 471.72'
N 88°39'50" W 220.14'
N 89°27'00" E 328.20'
EDGAR R., II & DIANE R. TURNER 040–1777–2–2002
Now or Formerly S. K. SWAN DBV – 1048 PAGE – 213
Now or Formerly R. WALTERS DBV – 2875 PAGE – 163
Now or Formerly G. RISCH DBV – 1866 PAGE – 12
Now or Formerly R. RISCH DBV – 2118 PAGE – 142
Now or Formerly C. McCOLLOUGH DBV – 736 PAGE – 132
Now or Formerly C. L. CONWAY DBV – 2816 PAGE – 54
Now or Formerly D. L. CONWAY
Now or Formerly C. L. CONWAY
Now or Formerly SARVER'S MILL ASSOC LP 040–S15–A–0000
Now or Formerly D. K. WALTERS DBV – 2828 PAGE – 29

FUTURE DEVELOPMENT PHASE V

Phase III B

PHASE IV

ROCK CLIFF COURT 50'

Creekside Drive 50' Public ROW

Vista View 50' Public ROW

Temporary Esmt

Temporary Turn around

Existing 25' Utility Easement

Existing Utility Easement

20' Storm Easement

20' Sanitary Easement

Monument to be set

Lot 401 9,538 SF 0.22 Acres
Lot 402 10,337 SF 0.24 Acres
Lot 403 9,793 SF 0.22 Acres
Lot 404 10,502 SF 0.24 Acres
Lot 405 10,768 SF 0.25 Acres
Lot 406 11,811 SF 0.27 Acres
Lot 407 11,677 SF 0.27 Acres
Lot 408 10,877 SF 0.25 Acres
L=39.27 R=25.00 Δ=90°00'00.00"
Lot 409 9,860 SF 0.23 Acres
Lot 410 10,148 SF 0.23 Acres
Lot 411 10,877 SF 0.25 Acres
Lot 412 11,737 SF 0.27 Acres
Lot 413 11,911 SF 0.27 Acres
Lot 414 16,255 SF 0.37 Acres
Lot 415 14,799 SF 0.34 Acres
Lot 416 13,911 SF 0.32 Acres
Lot 417 12,105 SF 0.28 Acres
Lot 418 12,125 SF 0.28 Acres
Lot 419 13,258 SF 0.30 Acres
Lot 420 9,112 SF 0.21 Acres
Lot 421 9,490 SF 0.22 Acres
Lot 422 9,885 SF 0.23 Acres
Lot 423 11,319 SF 0.26 Acres
Lot 424 13,054 SF 0.30 Acres
Lot 425 11,553 SF 0.27 Acres
Lot 426 10,364 SF 0.24 Acres
Lot COS A 34,174 SF 0.78 Acres

Lot 320 · Lot 321 · Lot 322 · Lot 323 · Lot 324 · Lot 325 · LOT 205R · LOT 206R · LOT 207R · LOT 208R · LOT 209R

N/F Turkington & Yon 040-S15-X205-0000 · N/F S&A Homes INC 040-S15-X205F-0000 · N/F S&A Homes INC 040-S15-X205E-0000

Now or Formerly G. RISCH 1866 PAGE – 12

Now or Formerly R. RISCH DBV – 2118 PAGE – 142

Now or i C. McCO DBV – 738

WALTERS AND HAAS SUBDIVISION PBV – 30 PAGE – 46

0' 50' 100'

Development Data:

Zoning:	R-2
Tax Parcel:	40-S15-A-0000
Site Area:	9.60 Ac.
Proposed use:	Single-Family Residential
Allowable Maximum Density:	8.0DU/AC
Lots proposed (Phase IV):	26
Minimum Lot Width:	100' (Single Family Lots)
Minimum Lot Area:	6200SF (Single Family Lots)
Setback:	20'
Minimum Side Yard:	10' (Single Family Lots)
Minimum Rear Yard:	20'

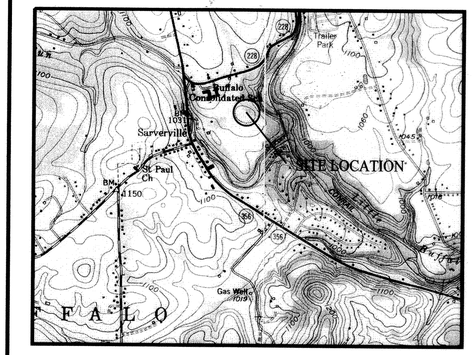

Site Vicinity Map
USGS Mapping

Not to Scale
For Reference Only

Acknowledgment of Notary Public

COMMONWEALTH OF PENNSYLVANIA)
) SS:
COUNTY OF BUTLER)

Before me, the subscribed, a Notary Public in and for said Commonwealth and County, personally appeared President of the Sarver's Mill Associates, LP, who being duly sworn, deponeth and saith that (s)he was personally present at the execution of the adoption, release, and dedication and saw the common corporate seal of the said corporation duly affixed and that the above release and dedication was duly signed and sealed by and as for the act and deed of the said Sarver's Mill Associates, LP, for the uses and purposes therein mentioned and that the name of this deponent subscribed to the said release and dedication as President of said corporation, in attestation of the due execution and delivery of said release and dedication of this deponent's own and proper respective handwriting.

President

Sworn to and subscribed before me this day.

WITNESS MY HAND AND NOTARIAL SEAL this 27th day of July, 2017.

Notary Public

COMMONWEALTH OF PENNSYLVANIA
NOTARIAL SEAL
CHRISTINA L PERRY
Notary Public
SOUTH FAYETTE TWP, ALLEGHENY COUNTY
My Commission Expires Oct 19, 2020

My commission expires the 19th day of October 2020

Surveyors Certification

I, MARTIN R. STOUGHTON, a registered professional land surveyor of the Commonwealth of Pennsylvania, do hereby certify that this plat correctly represents the lots, lands, streets, alleys, and highways as surveyed and plotted by me for the owners agents. I further certify that this plat meets with the requirements of all provisions of the Pennsylvania Municipalities Planning Code, Act 247, and other ordinances, including zoning, subdivision and land development, and stormwater management extant under the law of the Township of Buffalo in which this subdivision, land development is located affecting this plat.

7-27-17
Date

Martin R Stoughton PLS #SU075370

COMMONWEALTH OF PENNSYLVANIA
REGISTERED PROFESSIONAL
MARTIN R STOUGHTON
LAND SURVEYOR
No. SU075370

Title Clause

We, Sarver's Mill Associates, LP, owners of the Sarver's Mill, do hereby certify that the title of this property is in the name of Sarver's Mill Associates, LP as recorded in Intrument#201611968, Butler County Recorder of Deeds Office. We further certify that there is no mortgage, lien, or encumbrance against this property.

Witness
Sarver's Mill Associates, LP President

Corporation Adoption and Dedication

KNOW ALL MEN BY THESE PRESENTS, That the Sarver's Mill Associates, LP, a corporation incorporated under the laws of the Commonwealth of Pennsylvania, by virtue of a resolution of the Board of Directors thereof, does hereby adopt this plan as its (plan of lots, land development) of its property situate in the Township of Buffalo, County of Butler, and Commonwealth of Pennsylvania, and for diverse advantages accruing to it, does hereby dedicate forever, for public use for highway purposes, all drives, roads, streets, lanes and ways and other public highways shown upon the plat, with the same force and effect as is the same had been opened through legal proceedings, as well as any open space, common ground, or areas shown upon the plat which will, simultaneous with the recording of the plat or at some later date, be dedicated to the Township, and conveyed to a Homeowner's Association or other non-profit corporation formed to maintain the open space, common ground, or areas set forth in the plat, and in consideration of the approval of said plat, Sarver's Mill Associates, LP forever discharges the Commonwealth of Pennsylvania, County of Butler, and Township of Buffalo, its successors and assigns, from any liability for damages arising and to arise from the appropriation of said ground for public highways and the physical grading thereof to any grades that may be established, and any slopes required for the support and maintenance thereof according to such established grades. This dedication and release shall be binding upon Sarver's Mill Associates, LP, its successors and assigns and purchasers of lots in this plan.

IN WITNESS WHEREOF, the said corporation has caused its corporate seal to be affixed by the hand of its president and same to be attested by its secretary this ___ day of _____, 2017.

Attest:

Secretary
Sarver's Mill LP
President

PLAN BOOK	PAGE
365	45

County Planning Commission Review

Reviewed by the Butler County Planning Commission this 15th day of MARCH, 2017.

#17061

Secretary CHAIRMAN

Chairperson SEC

Township Planning Commission Review

Reviewed by the Buffalo Township Planning Commission this 1ST day of MARCH, 2017.

Secretary

Chairperson

Municipal Approval

The Township of Buffalo hereby gives public notice that in approving the plat for recording purposes only, the Township assumes no obligations, legal or otherwise, expressed or implied, either to accept said streets as Township streets or roads, to grade, pave, and curb streets in said plat or to construct sewers therein or to install any other such services ordinarily installed in Township streets and roads.

Approved by the Board of Supervisors of Buffalo Township this 7 day of MARCH, 2017.

Signed and Noted as approved this 30 day of AUGUST, 2017.

Secretary

Chairperson

Proof of Recording

COMMONWEALTH OF PENNSYLVANIA)
) SS:
COUNTY OF BUTLER)

Recorded in the Recorder's Office for the recording of deeds, plats, etc., in said County in Plan Book Volume 365, Page 45-45

Given under my hand and seal this 7 day of SEP, 2017.

RECORDER OF DEEDS COUNTY OF BUTLER PA

MICHELE M. MUSTELLO
RECORDER OF DEEDS
My Commission Expires First Monday in January 2020

T3 Global Strategies, Inc.
10 Emerson Ln, Suite 608
Bridgeville, PA 15017
412/221-1002 Phone 412/221-2004 Fax
www.t3gs.com

T3 Global Strategies

811 Know what's below. Call before you dig.

PLAN REVISIONS

DATE	DESCRIPTION
4/19/17	Revise per Client Comments

PREPARED FOR
Sarver's Mill Associates, LP
772 Pine Valley Drive
Pittsburgh, PA 15239

This plan has been prepared solely for the benefit of the parties listed hereon and is not to be used in any other manner. The use of this plan by any third party, or any other use for purposes from T3 Global Strategies, is prohibited without written consent.

Sarver's Mill Phase IV

Planned Residential Development

Phase IV Subdivision Plan

Situate In: Buffalo Township, Butler County, Pennsylvania

SCALE:	1" = 50'
DATE:	2/7/17
PROJ. No.	197
SHEET NUMBER	3.2

EX. LOT 16
P.B. 74 PG. 43
N/F E.J. HUBA

EX. LOT 14
P.B. 74 PG. 43
N/F D.A. MONTELEONE

EX. LOT 12
P.B. 74 PG. 43
N/F R. ARMAHISER

EX. LOT 10
P.B. 70 PG. 19
N/F J. ZOTTER

EX. LOT 3
P.B. 70 PG. 19
N/F R.R. BONNETT

N 05°04'50" E
37.95'

N 84°55'10" W
16.50'

S 84°55'10" E
16.50'

N 05°04'50" E
655.00'

N 05°04'50" E
358.02'

15' BUILDING LINE (SIDE YARD)

18.02'

340.00'

EX. I.P.

APPROX. LOCATION EX. SEPTIC FIELD #A86881

SEPTIC TANK

BLACKTOP DRIVE

N 40°15'08" E
244.42'
273.75'

℄ WOODCREST ROAD T-780
50' R/W (Paved 20.7')

60' BUILDING LINE

1 STORY DWELLING BRICK

WELL

N/F D.N. FALLECKER, P.J. FRY,
G.L. FALLECKER, A.M. REOTT &
T.E. FALLECKER

382.40'

N 84°55'10" W

15' BUILDING LINE (REAR YARD)

EX. LOT 1 OF
P.B. 134 PG. 31
9.73 ACRES
+1.88 ACRE (LOT 1 OF P.B. 100 PG. 50)
-1.86 ACRE LOT 2
9.75 ACRES TOTAL REVISED LOT 1
AFTER CONVEYANCES

215.00'

N 84°55'10" W
Original lot line to be removed

EX. LOT 1 OF
P.B. 100 PG. 50
1.88 ACRE

EX. I.P.

S 02°44'50" E

Original lot line to be removed
544.87'

N 02°44'50" W
210.00'

Proposed Lot Lines

15' BUILDING LINE (SIDE YARD)

28.33'

EX. I.P.

FRAME SHEDS

PIT #1
+10.5%

PIT #2
+5.9%

PIT & PERC TESTS
2183364

LOT 2
1.86 ACRES

214.64'

N 67°20'05" W

15' BUILDING LINE (REAR YARD)

60' BUILDING LINE

506.46'
232.71'

S 49°19'00" E
40.08'

S 49°22'00" E
68.00'

S 37°24'53" E
21.48'

℄ FALLECKER ROAD T-620
33' R/W (Paved 18')

EX. I.P.

S 05°33'59" W
1,001.88'

EX. I.P.

EX. I.P.+/-

EX. I.P.

15' BUILDING LINE (SIDE YARD)

15' BUILDING LINE (SIDE YARD)
384.42'

1,386.30'

N/F E.A.
SPINNEWEBER

EX. LOT 4
P.B. 157 PG. 40
N/F R.W. ORLOSKI

EX. LOT 3
P.B. 157 PG. 40
N/F R.W. ORLOSKI

EX. LOT 2
P.B. 157 PG. 40
N/F W.J. SCHOLLAERT

EX. LOT 1
P.B. 157 PG. 40
N/F R.E. OLSON

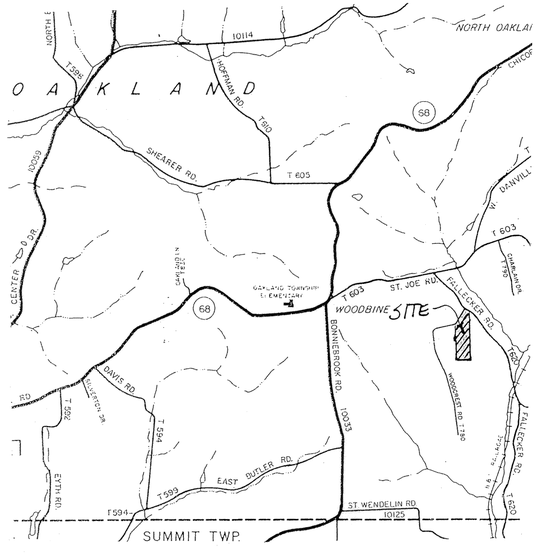

VICINITY MAP Scale: 1" = 2000'

KNOW ALL MEN BY THESE PRESENTS, that I, LuAnn Byrnes, of the Township of Oakland, of the County of Butler, Commonwealth of Pennsylvania, for myself, my heirs, executors, administrators and assigns, do hereby adopt this plan as my Plan of Lots of my property, situate in Oakland Township, Butler County, Pennsylvania, and for divers advantages accruing to me, do hereby dedicate forever, for public use for highway purposes all slope areas and all drives, roads, streets, lanes, ways and other public highways shown upon the plan, with the same force and effect as if the same had been opened through legal proceedings, and in consideration of the approval of said plan, and any future acceptance of said public highways by the said Commonwealth of Pennsylvania, County of Butler and Township of Oakland, I hereby covenant and agree to and by these presents do release and forever discharge said Commonwealth of Pennsylvania, County of Butler and Township of Oakland, their successors or assigns from any liability for damages arising and to arise from any appropriation of said ground for public highways and the physical grading thereof to any grades that may be established hereafter at any time. This dedication and release shall be binding upon LuAnn Byrnes, my heirs, executors, administrators and assigns and purchasers of lots in this plan.

IN WITNESS WHEREOF, I hereunto set my hand and seal this 8TH day of August 20 17.

ATTEST:

Paula J. Riggs
NOTARY PUBLIC

LuAnn Byrnes
OWNER

COMMONWEALTH OF PENNSYLVANIA)SS:
COUNTY OF BUTLER

Before me, the subscriber, a Notary Public in and for said Commonwealth and County, personally appeared the above named LuAnn Byrnes, and acknowledged the foregoing release and dedication and plan to be her act and deed and desired the same to be recorded as such.

Sworn to and subscribed before me this day.

WITNESS MY HAND AND NOTARIAL SEAL this 8th day of August, 20 17.

My Commission expires the 6th day of June, 20 21

SEAL

Paula J. Riggs
NOTARY PUBLIC

COMMONWEALTH OF PENNSYLVANIA
NOTARIAL SEAL
Paula J. Riggs, Notary Public
Center Twp., Butler County
My Commission Expires June 6, 2021
MEMBER, PENNSYLVANIA ASSOCIATION OF NOTARIES

0' 50' 100' 150'

I, Cheryl A. Hughes, a Registered Professional Land Surveyor of the Commonwealth of Pennsylvania, do hereby certify that this plan as shown hereon is based upon actual field survey of the land described and that all angles, distances and courses are correctly shown, that the monuments and markers have been set as shown on the plan, and that this plan represents the lots, lands, streets and highways as surveyed and plotted by me for the owners or agents.

DATE August 4, 2017 SEAL REG. NO. SU-32490-E

The Board of Supervisors of the Township of Oakland hereby gives public notice that in approving this plan for recording purposes only, the Township of Oakland assumes no obligation, legal or otherwise, expressed or implied, either to accept said streets as Township streets or roads or grade, pave and curb the streets in said plan, or to construct sewers therein or to install any other such service ordinarily installed in Township streets or roads.

SECRETARY SEAL CHAIRMAN/ PRESIDENT

Approved by the Supervisors of the Township of Oakland this 6th day of September, 20 17

SECRETARY SEAL CHAIRMAN/PRESIDENT

Reviewed by the Oakland Township Planning Commission this 8 day of August 20 17.

SECRETARY SEAL CHAIRMAN/PRESIDENT

Reviewed by the Butler County Planning Commission this 29TH day of July, 20 17.

SECRETARY SEAL CHAIRMAN/PRESIDENT

BUTLER COUNTY PLANNING COMMISSION

COMMONWEALTH OF PENNSYLVANIA)SS:
COUNTY OF BUTLER)

Recorded in the Recorder's Office for the recording of deeds, plans, etc. in said County in Plan Book Volume 365 page 46

Given under my hand and seal this 12 day of September 20 17.

SEAL

RECORDER

RECORDER OF DEEDS
BUTLER COUNTY, PA

MICHELE M. MUSTELLO
RECORDER OF DEEDS
My Commission Expires First Monday in January 2020

Instr:201709070019186 09/07/2017
Pages:1 F:$45.00 12:38PM
Michele Mustello T20170013636
Butler County Recorder ND

NOTES:

SUBJECT TO ANY AND ALL EXISTING RIGHTS-OF-WAY AND EASEMENTS OF RECORD.

ACCORDING TO THE FLOOD INSURANCE RATE MAP PREPARED BY THIS TOWNSHIP, THIS PROPERTY LIES IN ZONE C – AREAS DETERMINED TO BE OUTSIDE THE 500 YEAR FLOOD PLAIN.

PROPERTY OWNER: LuANN BYRNES
103 WOODCREST ROAD
BUTLER, PA 16002

PROPOSED WATER WELL TO SERVE THIS LOT IS TO BE LOCATED OUTSIDE OF THE 100' ISOLATION DISTANCE FROM THE SEPTIC SYSTEM TO BE BUILT.

THE PURPOSE OF THIS PLAN IS TO CREATE A NEW BUILDING LOT AND COMBINE REMNANT WITH EXISTING LOT 1.

REF: WILLIAM A. LEHNERD PLAN OF SUBDIVISION, P.B. 100 PG. 50.

REF: LEHNERD SUBDIVISION NO. 1, P.B. 134 PG. 31.

REF: MITCH SUBDIVISION NO. 1, P.B. 157 PG. 40

REF: DOHLI SUBDIVISION, P.B. 70 PG. 19.

REF: DOHLI SUBDIVISION PHASE II, P.B. 74 PG. 43

REF: FALLECKER SUBDIVISION, P.B. 238 PG. 30.

COMMONWEALTH OF PENNSYLVANIA REGISTERED PROFESSIONAL Cheryl A. Hughes LAND SURVEYOR SU-32490-E

PLAN BOOK	PAGE
365	46

REVISED 8/04/17; ENGINEERS COMMENTS
REVISED 7/27/17; LOT 2

Land Surveyors, Inc.
523 North Main Street
P.O. Box 1061
Butler, PA 16003-1061
(724) 287-6865
Cheryl A. Hughes, PLS Owner

LOT LINE REVISION

FOR: LUANN BYRNES

SITUATE: OAKLAND TWP., BUTLER CO., PA

Date 07/18/17	Scale 1" = 50'	Dwn By BEC	Ckd By CAH
Parcel No. 250-1F147-32		Instrument # 200309030039757	Service No. 17-065
Address WOODCREST/FALLECKER RDS			



LOCATION MAP 1" = 2000'

BUTLER COUNTY RECORDER OF DEEDS

BUTLER COUNTY PLANNING COMMISSION

ADAMS TOWNSHIP ENGINEER

SURVEYOR

KNOW ALL MEN BY THESE PRESENTS THAT WE, TODD E. & TONI R. HUBERT OF THE TOWNSHIP OF ADAMS, COUNTY OF BUTLER, COMMONWEALTH OF PENNSYLVANIA FOR OURSELVES, OUR HEIRS, EXECUTORS, ADMINISTRATORS AND ASSIGNS, DO HEREBY ADOPT THIS AS MY PLAN OF SUBDIVISION OF OUR PROPERTY SITUATE IN THE TOWNSHIP OF ADAMS, COUNTY OF BUTLER, COMMONWEALTH OF PENNSYLVANIA, AND FOR DIVERS ADVANTAGES ACCRUING TO US, DO HEREBY DEDICATE FOREVER, FOR PUBLIC USE FOR HIGHWAY, DRAINAGE, SEWAGE AND UTILITY PURPOSES, ALL DRIVES, ROADS, LANDS, RIGHTS OR WAY, EASEMENTS, WAYS, AND OTHER PUBLIC HIGHWAYS SHOWN UPON THE PLAN, WITH THE SAME FORCE AND EFFECT AS IF THE SAME HAD BEEN OPENED THROUGH LEGAL PROCEEDINGS AND IN CONSIDERATION OF THE APPROVAL OF SAID PLAN AND ANY FUTURE ACCEPTANCE OF SAID PUBLIC HIGHWAYS, RIGHTS OF WAY AND EASEMENTS BY THE TOWNSHIP OF ADAMS, WE, TODD E. & TONI R. HUBERT HEREBY AGREE TO AND BY THESE PRESENTS DO RELEASE AND FOREVER DISCHARGE THE TOWNSHIP OF ADAMS, ITS SUCCESSORS OR ASSIGNS FROM ANY LIABILITY FOR DAMAGES ARISING AND TO ARISE FROM THE APPROPRIATION OF SAID GROUND FOR PUBLIC HIGHWAYS, AND OTHER PUBLIC USES AND THE PHYSICAL GRADING THEREOF TO ANY GRADES THAT MAY BE ESTABLISHED. THIS DEDICATION AND RELEASE SHALL BE BINDING UPON TODD E. & TONI R. HUBERT OUR HEIRS, EXECUTORS, ADMINISTRATORS AND ASSIGNS AND PURCHASERS OF LOTS IN THIS PLAN.

IN WITNESS WHEREOF,WE HEREUNTO SET OUR HANDS AND SEALS THIS 31st DAY OF July 2017

ATTEST:

TODD E. HUBERT — Toni R. Hubert
TONI R. HUBERT

THE FOREGOING ADOPTION IS MADE BY TODD E. & TONI R. HUBERT WITH THE FULL UNDERSTANDING AND AGREEMENT THAT THE APPROVAL OF THE TOWNSHIP BOARD OF SUPERVISORS OF ADAMS TOWNSHIP, IF ATTACHED HERETO, WILL BECOME NULL AND VOID UNLESS THIS PLAN IS RECORDED IN THE RECORDER OF DEEDS OFFICE OF BUTLER COUNTY WITHIN NINETY (90) DAYS OF SAID APPROVAL.

WE ALSO CERTIFY THAT THE TITLE TO OUR PROPERTY AS SHOWN HEREON IS IN THE NAME OF TODD E. & TONI R. HUBERT AS RECORDED IN THE BUTLER COUNTY RECORDER OF DEEDS OFFICE AT INSTRUMENT NO. 201204050009249 & 201705300011117.

COMMONWEALTH OF PENNSYLVANIA }
COUNTY OF ~~BUTLER~~ Allegheny } SS:

BEFORE ME, THE SUBSCRIBER, A NOTARY PUBLIC IN AND FOR SAID COUNTY AND COMMONWEALTH, PERSONALLY APPEARED THE ABOVE NAMED TODD E. & TONI R. HUBERT WHO ACKNOWLEDGED THE FOREGOING RELEASE AND DEDICATION AND PLAN OF SUBDIVISION TO BE HIS/HER/THEIR ACT AND DEED AND DESIRED THE SAME TO BE RECORDED AS SUCH.

WITNESS MY HAND AND NOTARIAL SEAL THIS 31ST DAY OF JULY 2017

MY COMMISSION EXPIRES THE 26TH DAY OF SEPTEMBER 2017

Kristi L Demel
NOTARY PUBLIC

COMMONWEALTH OF PENNSYLVANIA
NOTARIAL SEAL
KRISTI L DEMEL
Notary Public
PITTSBURGH CITY, ALLEGHENY CNTY
My Commission Expires Sep 26, 2017

REVIEWED BY THE PLANNING COMMISSION OF THE TOWNSHIP OF ADAMS THIS 17th DAY OF July 20 17

CHAIRPERSON, PLANNING COMMISSION — SECRETARY, PLANNING COMMISSION

THE BOARD OF SUPERVISORS OF THE TOWNSHIP OF ADAMS HEREBY GIVES PUBLIC NOTICE THAT IN APPROVING THIS PLAN FOR RECORDING PURPOSES ONLY, THE TOWNSHIP OF ADAMS ASSUMES NO OBLIGATIONS, LEGAL OR OTHERWISE, EXPRESSED OR IMPLIED EITHER TO ACCEPT SAID STREETS AS TOWNSHIP STREETS OR ROADS OR GRADE, PAVE AND CURB THE STREETS IN SAID PLAN, OR TO CONSTRUCT SEWERS THEREIN OR TO INSTALL ANY OTHER SUCH SERVICE ORDINARILY INSTALLED IN TOWNSHIP STREETS OR ROADS.

APPROVED BY THE BOARD OF SUPERVISORS OF THE TOWNSHIP OF ADAMS THIS 24th DAY OF July 20 17

SECRETARY, ADAMS TOWNSHIP SUPERVISORS — ADAMS TOWNSHIP SUPERVISOR
CHAIRMAN, ADAMS TOWNSHIP SUPERVISORS — ADAMS TOWNSHIP SUPERVISOR
ADAMS TOWNSHIP SUPERVISOR

I, JAMES A. SPERDUTE, PLS PROFESSIONAL LAND SURVEYOR OF THE COMMONWEALTH OF PENNSYLVANIA, DO HEREBY CERTIFY, TO THE BEST OF MY KNOWLEDGE,INFORMATION AND BELIEF, THAT THIS PLAN CORRECTLY REPRESENTS THE LOTS, LANDS, STREETS, AND HIGHWAYS AS SURVEYED AND PLOTTED BY ME FOR THE OWNERS OR AGENTS.

JAMES A. SPERDUTE, P.L.S. # 24457-E — DATE 7/18/17

I, Ronald Olsen, A REGISTERED PROFESSIONAL ENGINEER FOR THE TOWNSHIP OF ADAMS, DO HEREBY CERTIFY THAT THIS SUBDIVISION PLAN MEETS ALL THE ENGINEERING AND DESIGN REQUIREMENTS OF THE ADAMS TOWNSHIP SUBDIVISION AND ZONING ORDINANCES

DATE 8/22/17 REG # 26400E

REVIEWED BY THE BUTLER COUNTY PLANNING COMMISSION THIS 19TH DAY OF JUNE 20 17

SECRETARY, BUTLER COUNTY PLANNING COMMISSION
CHAIRMAN, BUTLER COUNTY PLANNING COMMISSION

COMMONWEALTH OF PENNSYLVANIA) SS:)
COUNTY OF BUTLER)

Instr:201709080019362 09/08/2017
Pages:1 F:$45.00
Michele Mustello 11:55AM
Butler County Recorder ID T20170013704

RECORDED IN THE RECORDERS OFFICE FOR THE RECORDING OF DEEDS, PLANS, ETC. IN SAID COUNTY IN PLAN BOOK VOLUME 365 PAGE 47 GIVEN UNDER MY HAND AND SEAL THIS 7TH DAY OF September 20 17

BUTLER COUNTY RECORDER OF DEEDS — Michele Mustello

MICHELE M. MUSTELLO
RECORDER OF DEEDS
My Commission Expires First Monday in January 2020

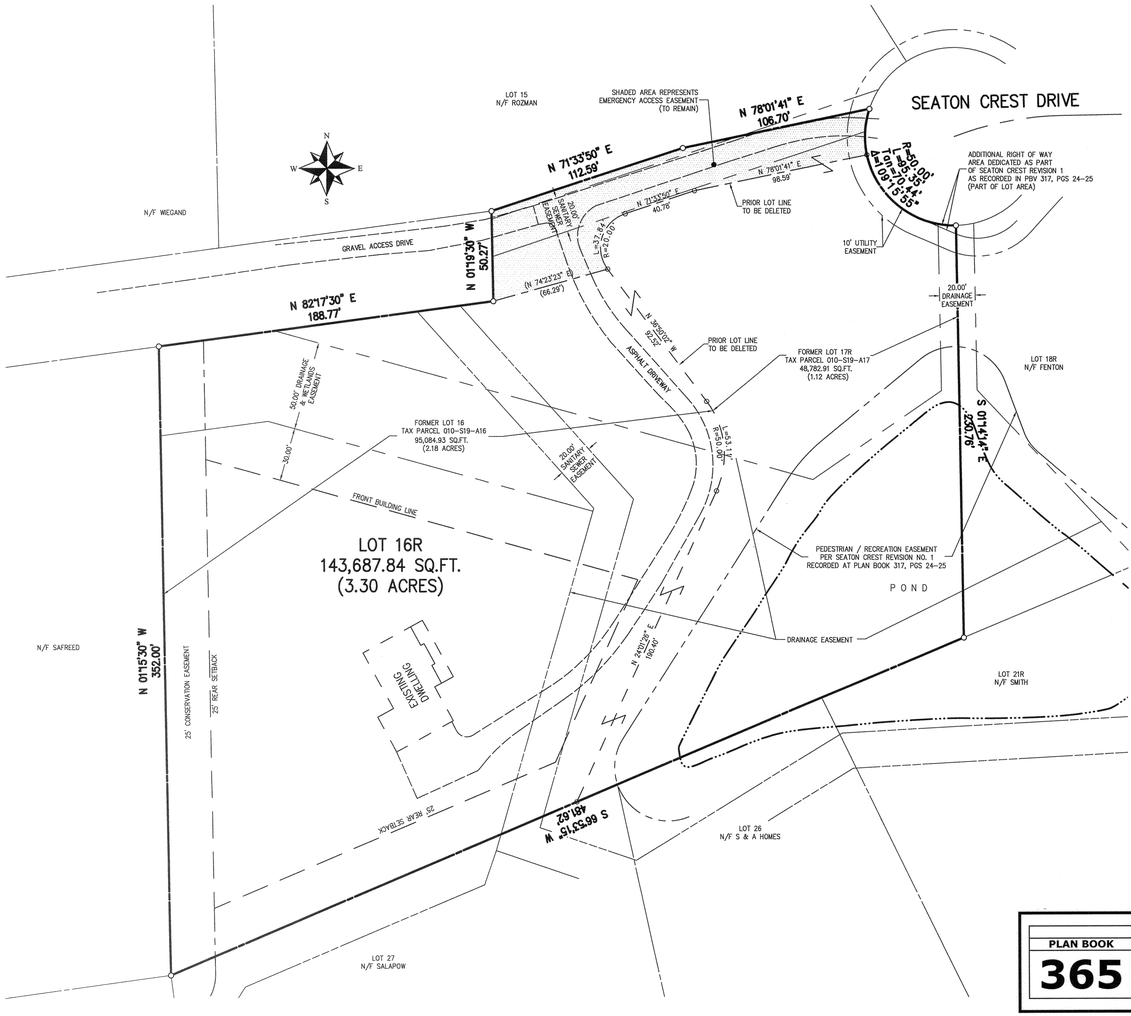

PLAN NOTES:

PROPERTY OWNERS:

TODD E. & TONI R. HUBERT
120 SEATON CREST DRIVE
MARS, PA 16046

LOT 16

TAX PARCEL 010-S19-A16
INSTRUMENT NO. 201204050009249
SEATON CREST PLAN OF LOT
PBV 277, PAGES 22-25

LOT 17R

TAX PARCEL 010-S19-A17
INSTRUMENT NO. 201705300011117
SEATON CREST PLAN OF LOTS REVISION NO 1
PBV 317, PAGES 24-25

TOTAL PROPERTY AFFECTED : 3.30 ACRES

EXISTING WATER SOURCE: MWAAT
EXISTING SEWAGE SERVICE : CONNECTION TO BCRA SEWER

THE PURPOSE OF THIS PLAN IS TO CONSOLIDATE LOT 16 OF THE SEATON CREST PLAN AND LOT 17R OF THE SEATON CREST REVISION NO. 1 PLAN INTO ONE CONTIGUOUS LOT. NO NEW BUILDING LOTS ARE BEING PROPOSED BY THIS PLAN.

THIS PLAN IS SUBJECT TO ALL EASEMENTS, RIGHTS OF WAY, RESTRICTIONS AND CONDITIONS OF THE PREVIOUSLY APPROVED PLANS.

CURRENT ZONING : RC RURAL CONSERVATION

- MINIMUM LOT AREA : 43,560 SQ.FT. (1 ACRE)
- MINIMUM LOT WIDTH : 150.00 FEET AT BUILDING LINE
- MINIMUM FRONT SETBACK : 50.00 FEET FROM RIGHT OF WAY
- MINIMUM SIDE SETBACK : 20.00 FEET (TWO REQUIRED)
- MINIMUM REAR SETBACK : 25.00 FEET

PLAN BOOK	PAGE
365	47

GRAPHIC SCALE

40 0 20 40 80 160

(IN FEET)
1 inch = 40 ft.

DRAWING NUMBER:	1001-1717603
DRAWING SCALE:	1"=40'
DATE:	JUNE 5, 2017
DRAWN BY:	JSS
REVISIONS:	

SHEET 1 OF 1

SEATON CREST REVISION NO. 2

BEING A CONSOLIDATION OF LOT 16 OF THE SEATON CREST PLAN OF LOTS & LOT 17R OF THE SEATON CREST PLAN OF LOTS REVISION NO. 1

ADAMS TOWNSHIP, BUTLER COUNTY, PENNSYLVANIA

SPERDUTE LAND SURVEYING
SLS
HARMONY, PA
724-452-4362
SLS1@zoominternet.net

OWNER'S ADOPTION

KNOW ALL MEN BY THESE PRESENTS THAT WE, LARRY A. AND SHARON S. STEPHENS, OF THE TOWNSHIP OF CLINTON, COUNTY OF BUTLER AND COMMONWEALTH OF PENNSYLVANIA, FOR OURSELVES, OUR HEIRS, EXECUTORS, ADMINISTRATORS AND ASSIGNS, DO HEREBY ADOPT THIS AS OUR PLAN OF LOTS OF OUR PROPERTIES, SITUATE IN THE TOWNSHIP OF CLINTON, COUNTY OF BUTLER AND COMMONWEALTH OF PENNSYLVANIA, AND FOR DIVERS ADVANTAGES ACCRUING TO US, DO HEREBY DEDICATE FOREVER, FOR PUBLIC USE FOR HIGHWAY PURPOSES, ALL SLOPE AREAS, DRIVES, ROADS, STREETS, LANES AND WAYS, AND OTHER PUBLIC HIGHWAYS SHOWN UPON THE PLAN, WITH THE SAME FORCE AND EFFECT AS IF THE SAME HAD BEEN OPENED THROUGH LEGAL PROCEEDINGS, AND IN THE CONSIDERATION OF THE APPROVAL OF SAID PLAN, AND ANY FUTURE ACCEPTANCE OF SAID PUBLIC HIGHWAYS BY THE COMMONWEALTH OF PENNSYLVANIA, COUNTY OF BUTLER AND TOWNSHIP OF CLINTON, WE HEREBY COVENANT AND AGREE TO AND BY THESE PRESENTS DO RELEASE AND FOREVER DISCHARGE THE COMMONWEALTH OF PENNSYLVANIA, COUNTY OF BUTLER AND TOWNSHIP OF CLINTON, THEIR SUCCESSORS AND ASSIGNS FROM ANY LIABILITY FOR DAMAGES ARISING AND TO ARISE FROM ANY APPROPRIATION OF SAID GROUND FOR PUBLIC HIGHWAYS AND THE PHYSICAL GRADING THEREOF TO ANY GRADES THAT MAY BE ESTABLISHED HEREAFTER AT ANY TIME. THIS DEDICATION AND RELEASE SHALL BE BINDING UPON THE ABOVE NAMED PROPERTY OWNER, HIS HEIRS, EXECUTORS, ADMINISTRATORS AND ASSIGNS AND PURCHASERS OF LOTS IN THIS PLAN.

IN WITNESS WHEREOF, I HEREUNTO SET MY HAND AND SEAL THIS 11th DAY OF AUGUST, 2017.

x Larry A. Stephens
LARRY A. STEPHENS

x Sharon S. Stephens
SHARON S. STEPHENS

ACKNOWLEDGMENT OF NOTARY PUBLIC

BEFORE ME, THE SUBSCRIBER, A NOTARY PUBLIC IN AND FOR THE COMMONWEALTH OF PENNSYLVANIA AND COUNTY OF BUTLER, PERSONALLY APPEARED THE ABOVE NAMED, LARRY A. AND SHARON S. STEPHENS, AND ACKNOWLEDGED THE FOREGOING RELEASE AND DEDICATION OF PLAN TO BE THEIR ACT AND DEED AND DESIRED THE SAME TO BE RECORDED AS SUCH.

SWORN TO AND SUBSCRIBED BEFORE ME THIS 11th DAY OF August, 2017.

MY COMMISSION EXPIRES THE 19 DAY OF February 2019

William L. Jeffcoat
NOTARY PUBLIC

COMMONWEALTH OF PENNSYLVANIA
Notarial Seal
Debra L. Jeffcoat, Notary Public
Jefferson Township, Butler County
My Commission Expires February 17, 2019

SURVEYOR'S CERTIFICATION

I, STANLEY D. GRAFF, A REGISTERED SURVEYOR OF THE COMMONWEALTH OF PENNSYLVANIA, DO HEREBY CERTIFY, TO THE BEST OF MY KNOWLEDGE, THAT THIS PLAN AS SHOWN HEREON IS BASED UPON ACTUAL FIELD SURVEY OF THE LAND DESCRIBED AND THAT ALL ANGLES, DISTANCES AND COURSES ARE CORRECTLY SHOWN, THAT THE MONUMENTS AND MARKERS HAVE BEEN SET AS SHOWN ON THE PLAN, AND THAT THIS PLAN CORRECTLY REPRESENTS THE LOTS, LANDS, STREETS AND HIGHWAYS AS SURVEYED AND PLOTTED BY ME FOR THE OWNERS OR AGENTS.

10 August '17
DATE

STANLEY D. GRAFF
REG. NO. SU-[illegible]-E

COMMONWEALTH OF PENNSYLVANIA — REGISTERED PROFESSIONAL — STANLEY D. GRAFF — LAND SURVEYOR — NO. 30163-E

MUNICIPAL DECLARATIONS

THE BOARD OF SUPERVISORS OF THE TOWNSHIP OF CLINTON, HEREBY GIVES PUBLIC NOTICE THAT IN APPROVING THIS PLAN FOR RECORDING PURPOSES ONLY, THE TOWNSHIP OF CLINTON ASSUMES NO OBLIGATIONS, LEGAL OR OTHERWISE, EXPRESSED OR IMPLIED EITHER TO ACCEPT SAID STREETS AS TOWNSHIP STREETS OR ROADS OR GRADE, PAVE AND CURB THE STREETS IN SAID PLAN, OR TO CONSTRUCT SEWERS THEREIN OR TO INSTALL ANY OTHER SUCH SERVICE ORDINARILY INSTALLED IN TOWNSHIP STREETS OR ROADS.

MUNICIPAL REVIEW AND APPROVAL STATEMENTS

APPROVED BY THE BOARD OF SUPERVISORS OF THE TOWNSHIP OF CLINTON THIS 15 DAY OF August, 2017.

SECRETARY — CHAIRMAN, BOARD OF SUPERVISORS

REVIEWED BY THE PLANNING COMMISSION OF THE TOWNSHIP OF CLINTON THIS 7 DAY OF August, 2017.

SECRETARY — CHAIRMAN, PLANNING COMMISSION

BUTLER COUNTY PLANNING COMMISSION REVIEW STATEMENT

REVIEWED BY THE BUTLER COUNTY PLANNING COMMISSION ON THIS 8TH DAY OF AUG., 2017.

SECRETARY — CHAIRMAN, BUTLER COUNTY PLANNING COMMISSION

BUTLER COUNTY PLANNING COMMISSION

PROOF OF RECORDING

RECORDED IN THE OFFICE OF THE RECORDER OF DEEDS OF THE COUNTY OF BUTLER, COMMONWEALTH OF PENNSYLVANIA, IN PLAN BOOK VOLUME 365, PAGE(S) 48.

GIVEN UNDER MY HAND AND SEAL THIS 15 DAY OF September, 2017.

RECORDER OF DEEDS

MICHELE M. MUSTELLO
RECORDER OF DEEDS
My Commission Expires First Monday in January 2020

RECORDER OF DEEDS — BUTLER COUNTY, PA

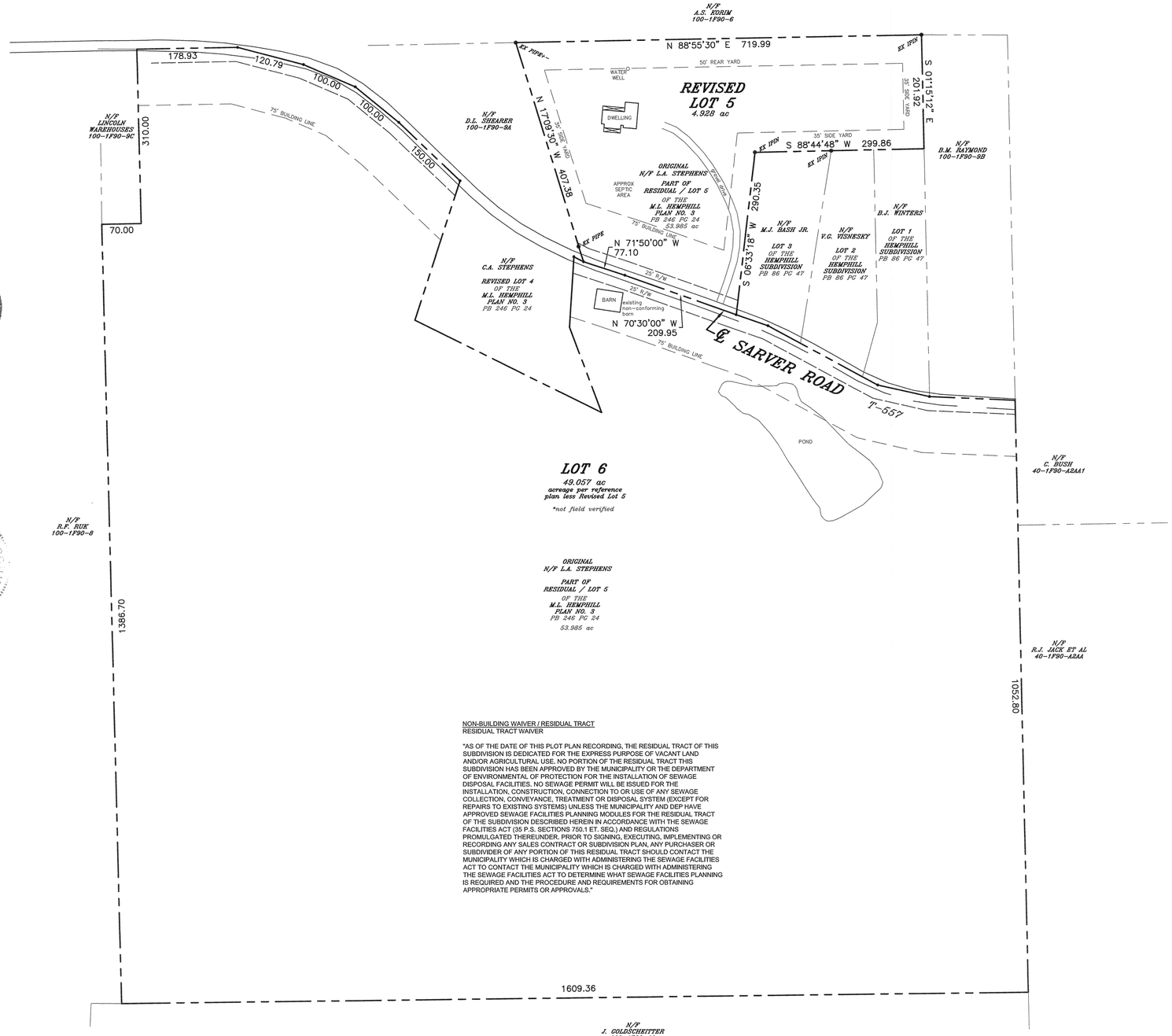

ZONING REQUIREMENTS:

MUNICIPALITY: TOWNSHIP OF CLINTON

ZONING DISTRICT: AGRICULTURE CONSERVATION DISTRICT

1. SET BACK REQUIREMENTS.
   - 1.1. MIN. FRONT YARD = 75 FT
   - 1.2. MIN. SIDE YARD = 35 FT
   - 1.3. MIN. REAR YARD = 50 FT

GENERAL NOTES:

1. OWNERS: LARRY A. & SHARON S. STEPHENS
2. ZONING: AGRICULTURAL CONSERVATION
3. REFERENCES
   - 3.1. CURRENT DEEDS OF RECORD
   - 3.2. PREVIOUSLY RECORDED PLANS
     - 3.2.1. M. L. HEMPHILL PLAN NO. 3 PLAN BOOK 246 PG 24
     - 3.2.2. M. L. HEMPHILL PLAN NO. 2 PLAN BOOK 205 PG 13
     - 3.2.3. KENNETH HEMPHILL SUBDIVISION PLAN BOOK 86 PG 47

NON-BUILDING WAIVER / RESIDUAL TRACT

RESIDUAL TRACT WAIVER

"AS OF THE DATE OF THIS PLOT PLAN RECORDING, THE RESIDUAL TRACT OF THIS SUBDIVISION IS DEDICATED FOR THE EXPRESS PURPOSE OF VACANT LAND AND/OR AGRICULTURAL USE. NO PORTION OF THE RESIDUAL TRACT THIS SUBDIVISION HAS BEEN APPROVED BY THE MUNICIPALITY OR THE DEPARTMENT OF ENVIRONMENTAL OF PROTECTION FOR THE INSTALLATION OF SEWAGE DISPOSAL FACILITIES. NO SEWAGE PERMIT WILL BE ISSUED FOR THE INSTALLATION, CONSTRUCTION, CONNECTION TO OR USE OF ANY SEWAGE COLLECTION, CONVEYANCE, TREATMENT OR DISPOSAL SYSTEM (EXCEPT FOR REPAIRS TO EXISTING SYSTEMS) UNLESS THE MUNICIPALITY AND DEP HAVE APPROVED SEWAGE FACILITIES PLANNING MODULES FOR THE RESIDUAL TRACT OF THE SUBDIVISION DESCRIBED HEREIN IN ACCORDANCE WITH THE SEWAGE FACILITIES ACT (35 P.S. SECTIONS 750.1 ET. SEQ.) AND REGULATIONS PROMULGATED THEREUNDER. PRIOR TO SIGNING, EXECUTING, IMPLEMENTING OR RECORDING ANY SALES CONTRACT OR SUBDIVISION PLAN, ANY PURCHASER OR SUBDIVIDER OF ANY PORTION OF THIS RESIDUAL TRACT SHOULD CONTACT THE MUNICIPALITY WHICH IS CHARGED WITH ADMINISTERING THE SEWAGE FACILITIES ACT TO CONTACT THE MUNICIPALITY WHICH IS CHARGED WITH ADMINISTERING THE SEWAGE FACILITIES ACT TO DETERMINE WHAT SEWAGE FACILITIES PLANNING IS REQUIRED AND THE PROCEDURE AND REQUIREMENTS FOR OBTAINING APPROPRIATE PERMITS OR APPROVALS."

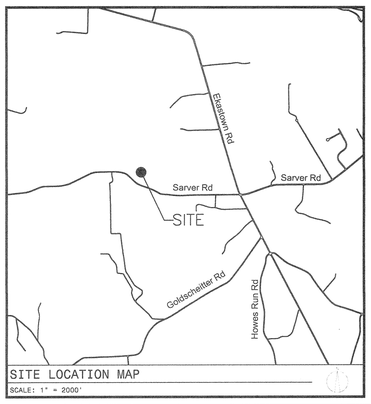

SITE LOCATION MAP

SCALE: 1" = 2000'

NOTE: SUBJECT TO AND TOGETHER WITH ANY AND ALL EXISTING RIGHTS-OF-WAY, EASEMENTS AND CONDITIONAL CLAUSES OF RECORD OR ESTABLISHED BY DUE PROCESS.

Instr:201709150019993 09/15/2017
Pages:1 F:$45.00 10:38AM
Michele Mustello T20170014103
Butler County Recorder FL

L. STEPHENS PLAN

Being a subdivision of Lot 5/Residual of M.L. Hemphill Plan No. 3, PB 246 Pg 24, being Butler County Tax Parcel 100-1F90-9G

RECORDED Sep 15 2017

PLAN BOOK	PAGE
365	48

SHEET 1 of 1

REV	DESCRIPTION	BY	DATE
A	REVISE ADJOINER LOT NUMBER	SDG	8/1/17

GRAFF SURVEYING

GRAFF SURVEYING LLC
PO BOX 521 | SAXONBURG, PA 16056
P: 724-352-3811 F: 724-352-1059
INFO@GRAFFSURVEYING.COM
WWW.GRAFFSURVEYING.COM

PROJECT DESCRIPTION

L. STEPHENS PLAN

BEING A

SUBDIVISION

FOR

LARRY A. & SHARON S. STEPHENS

SITUATE

TOWNSHIP OF CLINTON
BUTLER COUNTY, PENNSYLVANIA

DATE	DRAWN	CHECKED	SCALE
7/25/2017	SDG	Sdg	1" = 100'

PROJECT NO.	TAX PARCEL NO.	REVISION
17-143	100-1F90-9G	A

Proposed Subaru Dealership

#1 Cochran

Connoquenessing Township, Butler County, Pennsylvania

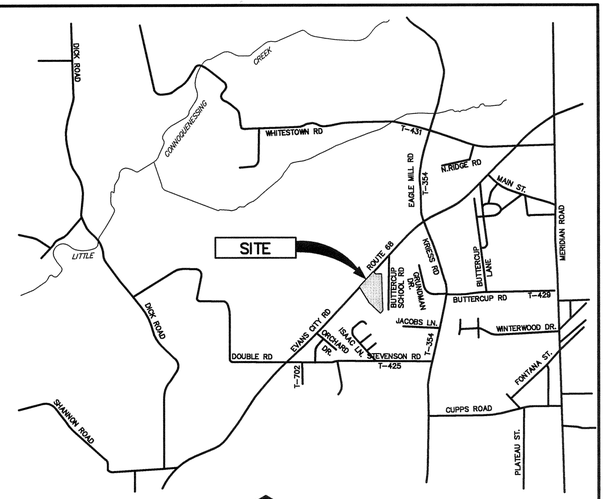

Location Map
SCALE: 1"=2000'

Index of Drawings:

C-1 Existing Conditions Plan
C-2 Site/Utilities Plan
C-3 Site/Utilities Plan Enlargement
C-4 Grading and Drainage Plan
C-5 Earthwork Plan
C-6 Soil Erosion and Sedimentation Control Plan
C-6A Soil Erosion and Sedimentation Control Plan Enlargement
~~C-7 Soil Erosion and Sedimentation Control Details~~
~~C-8 Soil Erosion and Sedimentation Control Details~~
~~C-9 Soil Erosion and Sedimentation Control Details~~
~~C-10 Soil Erosion and Sedimentation Control Details~~
C-11 Post Construction Stormwater Management/BMP Details
C-12 Post Construction Stormwater Management/BMP Details
C-13A Post Construction Stormwater Management/BMP Details
C-13B Post Construction Stormwater Management/BMP Details
C-14A Post Construction Stormwater Management/BMP Details
C-14B Post Construction Stormwater Management/BMP Details
C-14C Post Construction Stormwater Management/BMP Details
~~C-15 Site Details~~
~~C-16 Site Details~~
~~C-17 Site Details~~
~~C-18 Site Details~~
C-19 Landscape Plan
C-20 Landscape Details and Notes

OWNER'S ADOPTION

Cochran R.E., L.P., a Pennsylvania Limited Partnership, owner of the land shown on the Cochran Subaru Site Plans hereby adopts this plan as its plan of land development and irrevocably dedicates all streets and other property identified for dedication on the plan to the public. This adoption and dedication shall be binding upon the partnership and upon its heirs, executors, and assigns.

Carolyn Harufic
Signature of Witness

Signature of Owner(s)

July 26, 2017
Date

ACKNOWLEDGMENT OF PARTNERSHIP ADOPTION AND DEDICATION

Before me, the undersigned Notary public in and for the Commonwealth of Pennsylvania and County of Allegheny, personally appeared Neal Jewkes, a partner in the firm of Cochran R.E., L.P. and acknowledged the foregoing adoption and dedication to be the act of the partnership.

Witness my hand and notarial seal this 26th day of July, 2017

(Seal)

Notary Public

COMMONWEALTH OF PENNSYLVANIA
NOTARIAL SEAL
Joyce A. Hamilton, Notary Public
Monroeville Boro, Allegheny County
My Commission Expires July 9, 2018
MEMBER, PENNSYLVANIA ASSOCIATION OF NOTARIES

SURVEYOR'S CERTIFICATION

I certify that, to the best of my knowledge, the survey and plans shown hereon are correct and accurate to the standards required.

JUNE 23, 2017
Date

John S. Bitting

SU 034631 E
Registration Number

MUNICIPAL DECLARATIONS

The Board of Supervisors of the Township of Connoquenessing, hereby gives notice that in approving this plan for recording, the Township of Connoquenessing has not accepted dedication of any streets, land or public facilities and has no obligation to improve or maintain such streets, land or facilities.

Brenda Davis
Secretary

Chairman, Board of Supervisors

BOARD OF SUPERVISORS

Approved by the Board of Supervisors of the Township of Connoquenessing by Ordinance [redacted] on the 2nd day of August 2017

Brenda Davis
Secretary

Chairman, Board of Supervisors

MUNICIPAL ENGINEER

I, William F. Braun, a registered professional engineer, the Township Engineer for Connoquenessing Township, do hereby certify that this ~~land development~~ Stormwater management plan meets all the engineering and design requirements of the Township ordinances except as departures have been authorized by the Connoquenessing Township Board of Supervisors.

Signature

8-9-17
Date

PE044230E
Registration Number

TOWNSHIP PLANNING COMMISION

Approval by Township Planning Commission

Reviewed and approved by the Connoquenessing Township Planning Commission on this 2nd day of August, 20 17.

Diane C. Harchosky
Secretary

Chairman

BUTLER COUNTY PLANNING COMMISION

Reviewed by the Butler County Planning Commission on this 17th day of MAY, 17.

Secretary

Chairman, Butler County Planning Commission

PROOF OF RECORDING

Recorded in the office of the Recorder of Deeds of the County of Butler, Commonwealth of Pennsylvania, in Plan Book Volume 365, Page(s) 49-65
Given under my hand and seal this 15 day of September 20 17.

(Seal) MICHELE M. MUSTELLO
RECORDER OF DEEDS
My Commission Expires First Monday in January 2020

Recorder of Deeds

COCHRAN R.E., L.P.	NOTARY PUBLIC	REGISTERED SURVEYOR	TOWNSHIP ENGINEER	TOWNSHIP OF CONNOQUENESSING BOARD OF SUPERVISORS	TOWNSHIP OF CONNOQUENESSING PLANNING COMMISSION	BUTLER COUNTY PLANNING COMMISSION	BUTLER COUNTY RECORDER OF DEEDS
						BUTLER COUNTY PLANNING COMMISSION	RECORDER OF DEEDS BUTLER COUNTY, PA

Instr:201709190020016 09/19/2017
Pages:17 11:08AM
Michele Mustello T20170014113
Butler County Recorder FL

PLAN BOOK	PAGE
365	49

Job No. 4891

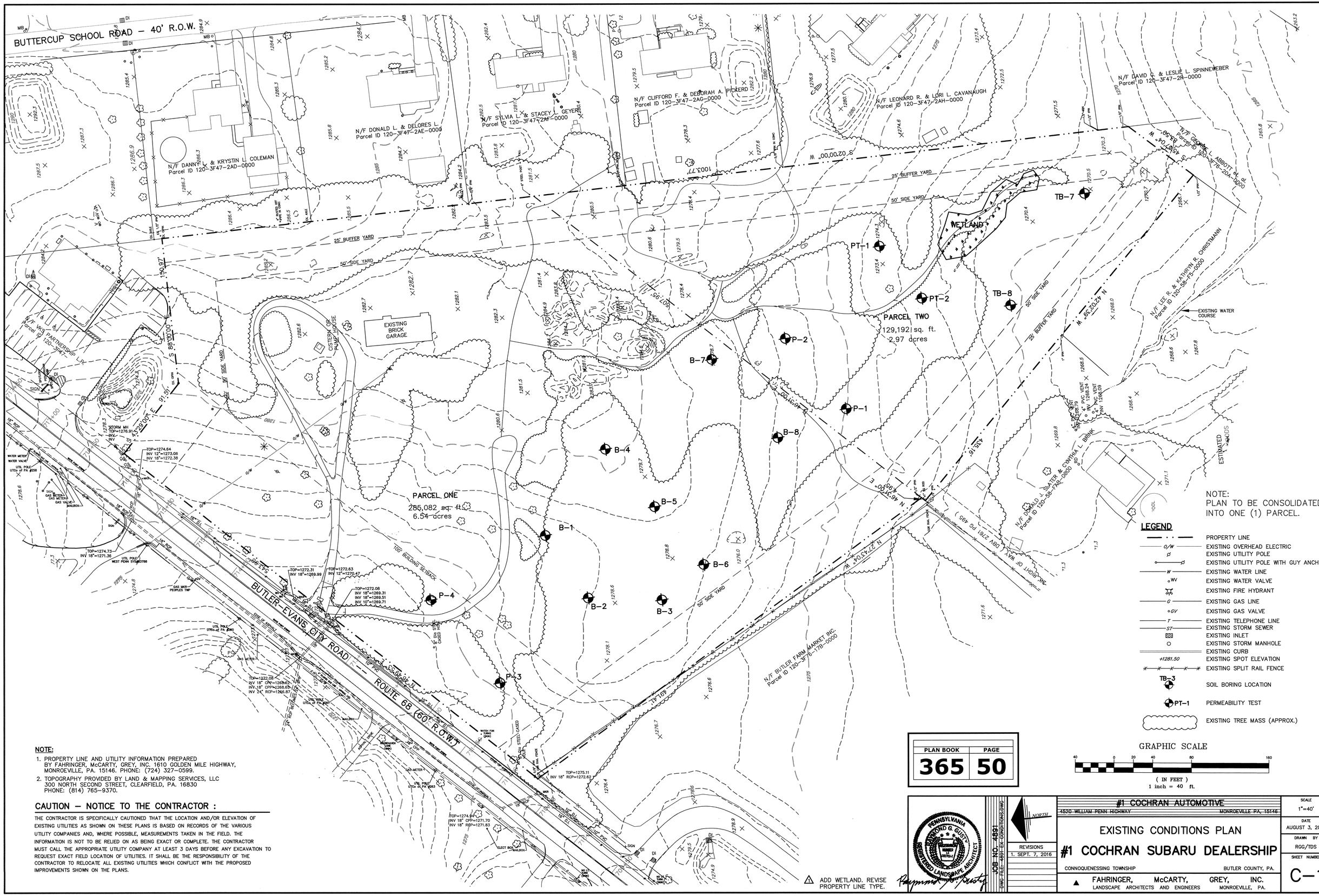
BUTTERCUP SCHOOL ROAD – 40' R.O.W.
N/F DONALD L. & DELORES L.
Parcel ID 120-3F47-2AE-0000
N/F DANNY L. & KRYSTIN L. COLEMAN
Parcel ID 120-3F47-2AD-0000
N/F SYLVIA L. & STACEY L. GEYER
Parcel ID 120-3F47-2AF-0000
N/F CLIFFORD F. & DEBORAH A. PICKERD
Parcel ID 120-3F47-2AG-0000
N/F LEONARD R. & LORI L. CAVANAUGH
Parcel ID 120-3F47-2AH-0000
N/F DAVID C. & LESLIE L. SPINNEWEBER
Parcel ID 120-3F47-2R-0000
N/F GEORGE L. ABBOTT, et al
Parcel ID 120-3F76-20A-0000
N/F LEE R. & KATHRYN R. CHRISTMANN
Parcel ID 120-58-75-0000
N/F BRAD J. SLATER & CYNTHIA L. BRINK
Parcel ID 120-58-FR2-0000
N/F BUTLER FARM MARKET INC.
Parcel ID 120-3F76-77B-0000
N/F VKA PARTNERSHIP L.P.
Parcel ID 120-3F47
25' BUFFER YARD
50' SIDE YARD
50' BUILDING SETBACK
EXISTING BRICK GARAGE
CISTERN OF PUMP HOUSE
WETLAND
EXISTING WATER COURSE
PARCEL ONE
285,082 sq. ft.
6.54 acres
PARCEL TWO
129,192 sq. ft.
2.97 acres
BUTLER-EVANS CITY ROAD
ROUTE 68 (60' R.O.W.)
PT-1
PT-2
P-1
P-2
P-3
P-4
B-1
B-2
B-3
B-4
B-5
B-6
B-7
B-8
TB-7
TB-8
ESTIMATED WOODS
S 88°00'00" E 150.97'
S 88°00'00" E 91.51'
S 29°00'00" E 435.16'
S 27°45'00" W 1003.77'
N 27°45'00" E 455.16'
N 46°30'00" E 435.16'
N 27°45'00" E 1007.95'
N 27°45'00" E 1167.69'
N 27°45'00" E 1167.69'
N 27°45'00" E 1167.69

BUTTERCUP SCHOOL ROAD – 40' R.O.W.

N/F DANNY L. & KRYSTIN L. COLEMAN
Parcel ID 120-3F47-2AD-0000
(RESIDENTIAL)

N/F DONALD L. & DELORES L.
Parcel ID 120-3F47-2AE-0000
(RESIDENTIAL)

N/F SYLVIA L. & STACEY L. GEYER
Parcel ID 120-3F47-2AF-0000
(RESIDENTIAL)

N/F CLIFFORD F. & DEBORAH A. PICKERD
Parcel ID 120-3F47-2AG-0000
(RESIDENTIAL)

N/F LEONARD R. & LORI L. CAVANAUGH
Parcel ID 120-3F47-2AH-0000
(RESIDENTIAL)

N/F DAVID G. & LESLIE L. SPINNEWEBER
Parcel ID 120-3F47-2R-0000
(RESIDENTIAL)

N/F GEORGE L. ABBOTT, et. al.
Parcel ID 120-3F76-20A-0000
(RESIDENTIAL)

N/F LEE R. & KATHRYN R. CHRISTMANN
Parcel ID 120-3F56-F5-0000
(RESIDENTIAL)

N/F VKS PARTNERSHIP L.P.
Parcel ID 120-3F47-
(COMMERCIAL)

N/F BUTLER FARM MARKET INC.
Parcel ID 120-3F76-178-0000
(COMMERCIAL)

N/F DONALD J. SLATER & CYNTHIA L. BRINK
Parcel ID 120-3F56-FAB-0000
(RESIDENTIAL)

BUTLER-EVANS CITY ROAD – ROUTE 68

25' BUFFER YARD
50' SIDE YARD
100' BUILDING SETBACK

FUTURE DEVELOPMENT
EX. GARAGE (TO BE REMOVED)
CISTERN OR PUMP HOUSE
FUTURE CONNECTION TO PUBLIC SANITARY SEWER (CAP END OF PIPE)
REMOVE POLE
REMOVE EXISTING UTILITY POLES
OVERHEAD WIRES TO BE REMOVED
DETENTION BASIN
EMERGENCY STRUCTURE ES-2 (SEE DETAIL) TOP=1274.75 INV.=1270.14
OUTLET STRUCTURE OS-2 (SEE DETAIL) TOP= 1275.70 INV.= 1270.70
RELOCATED FIRE HYDRANT
RELOCATE EXISTING FIRE HYDRANT
EMERGENCY STRUCTURE ES-1 (SEE DETAIL) TOP= 1276.75 INV.= 1273.25(24"IN) INV.= 1270.17(18"IN) INV.= 1268.42(6"IN/24"OUT)
OUTLET STRUCTURE OS-1 (SEE DETAIL)

PROPOSED SUBARU DEALERSHIP
FFE=1282.00

SERVICE VEHICLES
CUSTOMER PARKING
EMPLOYEE PARKING
VEHICLE DISPLAY
SERVICE RECEPTION
SHOWROOM
VEHICLE DISPLAY
GRAVEL TRENCH
WETLAND

SAN M.H. 3 TOP=1281.00 INV.=1274.30
SAN M.H. 1 TOP=1274.10 INV.=1269.10
SAN M.H. 2 TOP=1280.00 INV.=1275.50
MANHOLE S-1 TOP=1277.77 INV.=1270.77(18"IN) INV.=1270.44
MANHOLE S-2 TOP=1277.77 INV.=1272.80(18"IN) INV.=1272.52(18"OUT)
MANHOLE S-3 TOP=1272.09+/- INV.=1267.91(24")

INLET I-1 TOP=1277.46 INV.=1274.46
INLET I-2 TOP=1273.14 INV.=1270.89(8") INV.=1268.46(15") INV.=1267.81(24"w/8"INSERT) INV.=1267.81(24"OUT)
INLET I-3 TOP=1272.87 INV.=1269.42(6") INV.=1268.67(15")
INLET I-4 TOP=1272.87 INV.=1269.42(15")
INLET I-5 TOP=1275.49 INV.=1273.21
INLET I-6 TOP=1276.75 INV.=1273.57(15"IN) INV.=1271.32(15"IN) INV.=1271.07(18")
INLET I-7 TOP=1275.14 INV.=1272.89(8"IN) INV.=1271.89(15")
INLET I-8 (W/SNOUT 18") INV.=1273.25(6") INV.=1272.25(15") SUMP=1269.00
INLET I-9 TOP=1275.50 INV.=1272.50
INLET I-10 TOP=1277.70 INV.=1274.70(15"IN) INV.=1274.20(15"IN OUT)
INLET I-11 TOP=1277.46 INV.=1274.46
INLET I-12 TOP=1278.70 INV.=1275.70
INLET I-13 TOP=1280.36 INV.=1279.86
INLET I-14 TOP=1280.24 INV.=1277.32(6") INV.=1277.24(18")
INLET I-15 TOP=1281.00 INV.=1276.75
INLET I-16 TOP=1276.75 INV.=1272.90(6"IN) INV.=1272.00(18"IN/24"OUT)
INLET I-17 (W/SNOUT 18") TOP=1275.50 INV.=1272.50 SUMP=1269.25
INLET I-18 TOP=1278.60 INV.=1276.35(6") INV.=1275.60(15"OUT)
INLET I-19 TOP=1276.75 INV.=1271.50(18"IN/OUT)
INLET I-20 TOP=1280.15 INV.=1272.30(15"IN) INV.=1272.15(18"OUT)
INLET I-21 TOP=1280.87 INV.=1272.37
INLET I-22 TOP=1276.75 INV.=1275.25 SUMP=1273.25
INLET I-23 TOP=1278.87 INV.=1277.06(12"IN) SUMP=1276.56
INLET I-24 TOP=1280.36 INV.=1278.11
INLET I-25 TOP=1279.17 INV.=1276.92(6") INV.=1276.17(15")
INLET I-26 TOP=1277.63 INV.=1274.63
INLET I-27 TOP=1277.59 INV.=1274.60
INLET I-28 TOP=1280.28 INV.=1278.01(6") INV.=1277.51(6")
INLET I-29 (W/SNOUT 18") TOP=1277.59 INV.=1272.59 SUMP=1270.73

8" DIA. CLEANOUT TOP=1277.59 INV.=1275.59
8" DIA. CLEANOUT TOP=1277.39 INV.=1274.92
15" DIA. CLEANOUT TOP=1281.00 INV.=1276.75
8" DIA. CLEANOUT TOP=1277.59 INV.=1275.59
8" DIA. CLEANOUT TOP=1278.00 INV.=1274.18
8" DIA. CLEANOUT TOP=1280.00 INV.=1277.00
8" DIA. CLEANOUT TOP=1278.13 INV.=1275.63
8" DIA. CLEANOUT TOP=1275.88 INV.=1270.22
8" DIA. CLEANOUT TOP=1277.59 INV.=1275.59
8" DIA. CLEANOUT TOP=1280.11 INV.=1274.11
8" DIA. LAWN CLEANOUT TOP=1278.41 INV.=1276.01

3750 GAL RECYCLE WATER INVENTORY AND PUMPING STATION
TANK LOADING STATION (SLUDGE DIGESTION – 20,000 GAL)
1000 GPD TERTIARY TREATMENT SYSTEM
3750 GAL SEPTIC TANK
M.H.
ADS FLARED END SECTION W/10' METAL ANIMAL GUARD (FINGER) INV.=1274.03
2x2 STANDARD INLET BOX W/NEENAH R-4347 GRATE TOP=1276.38 INV.=1274.84(6"IN) INV.=1274.05(10"OUT)
CAP FUTURE CONNECTION AT MANHOLE
OIL WATER SEPARATOR

17'-6"@ 0.50%
4'-10"@ 0.50%
25'-15"@ 1.04%
97'-15"@ 0.50%
45'-15"@ 2.00%
97'-15"@ 1.65%
8'-15"@ 1.70%
45'-15"@ 2.00%
42'-15"@ 1.62%
34'-15"@ 0.90%
8'-24"@ 2.25%
6'-24"@ 1.00%
6'-24"@ 1.00%
22'-24"RCP @ 0.91%
10" D.I.
10" PVC
18" D.I.
18" RCP
24" RCP

S 88°00'00" E 150.97'
S 1°29'00" E 91.51'
N 88°00'00" W 150.97'
S 88°30'50" W 1003.77'
N 00°00'20" E
S 45°07'04" W 85.50'
N 45°07'04" E 85.50'
N 27°43'04" W 491.41'
N 65°20'42" E
N 45°39'00" E 435.16'
N 4°20'00" W

TOP=1274.64 INV 12"=1273.08 INV 18"=1272.38
TOP=1274.73 INV 18"=1271.36
TOP=1274.94 INV 18" CPP=1271.70 INV 18" RCP=1271.83
TOP=1275.11 INV 18" RCP=1272.62
TOP=1272.08 INV 18" CPP=1268.62 INV 18" CPP=1268.65 INV 24" RCP=1266.87
EX. INLET I-1 TOP= 1271.94 INV.= 1267.11(24") INV.= 1266.87(24")

STORM MH TOP=1276.91 INV INV
WATER METER WATER VALVE
UTIL POLE UTCo of PA #258
SIGN
GAS METER
GAS METER-1
GAS VALVE
MAILBOX
UTIL POLE WEST PENN 57SS63788
UTIL POLE UTCo of PA #260
GAS METER
GAS MKR PEOPLES TWP
UTIL POLE UTCo of PA #263
ELECT BOX
MAILBOX
SIGN
CL ROAD
CENTERLINE

SITE DATA:

PROPOSED USE	AUTOMOTIVE SALES AND SERVICE
SITE AREA	9.51 ACRES
GROSS BUILDING AREA	26,807 S.F.
PARKING SPACES REQUIRED	93 SPACES (TOTAL)
•4450 SF SHOWROOM/400 SF	11 SPACES
•EMPLOYEES	40 SPACES
•21 BAYS x 2/BAY	42 SPACES
PARKING SPACES PROVIDED	94 SPACES
HANDICAP SPACES REQUIRED	4 SPACES
HANDICAP SPACES PROVIDED	4 SPACES
VEHICLE DISPLAY SPACES	178 SPACES

ZONING DATA TABLE:

SITE STANDARDS (BY ORDINANCE)	REQUIRED	PROVIDED
MINIMUM NET LOT AREA	1.49 ACRES	9.51 ACRES
MINIMUM LOT WIDTH	200 FT.	543.98 FT.
MINIMUM FRONT YARD	100 FT.	100 FT.
MINIMUM REAR YARD	50 FT.	50 FT.
MINIMUM SIDE YARD	50 FT.	50 FT.

LEGEND

- PROPERTY LINE
- EXISTING STORM MANHOLE
- EXISTING INLET
- PROPOSED INLET
- EXISTING STORM SEWER
- PROPOSED STORM SEWER
- PROPOSED ROOF DRAIN
- EXISTING SIGN
- EXISTING UTILITY POLE
- EXISTING OVERHEAD LINE
- PROPOSED UNDERGROUND ELECTRIC
- PROPOSED UNDERGROUND COMMUNICATIONS
- PROPOSED SANITARY SEWER
- PROPOSED CLEANOUT
- PROPOSED LIGHTING
- EXISTING WATER LINE
- PROPOSED WATER LINE
- EXISTING FIRE HYDRANT
- EXISTING WATER VALVE
- EXISTING GAS LINE
- EXISTING GAS VALVE
- PAINTED ISLAND
- LIMIT OF WORK
- MEDIUM DUTY ASPHALT
- HEAVY DUTY ASPHALT
- CONCRETE PAVING
- PERVIOUS PAVERS
- GRAVEL

PLAN BOOK	PAGE
365	51

GRAPHIC SCALE
40 0 20 40 80 160
(IN FEET)
1 inch = 40 ft.

⚠ ADD WETLAND. ADD RADIUS DIMENSIONS. REVISE MAIN ENTRANCE STORM SEWER. REVISE SANITARY.

PENNSYLVANIA RAYMOND G. GUSTY REGISTERED LANDSCAPE ARCHITECT

JOB NO. 4691
4691 Site Plan 2016

NORTH

REVISIONS
1. SEPT. 7, 2016

#1 COCHRAN AUTOMOTIVE
4520 WILLIAM PENN HIGHWAY MONROEVILLE, PA. 15146

SITE/UTILITIES PLAN

#1 COCHRAN SUBARU DEALERSHIP

CONNOQUENESSING TOWNSHIP BUTLER COUNTY, PA.

FAHRINGER, McCARTY, GREY, INC.
LANDSCAPE ARCHITECTS AND ENGINEERS MONROEVILLE, PA.

SCALE 1"=40'
DATE AUGUST 3, 2016
DRAWN BY RGG/TDS
SHEET NUMBER C–2

GENERAL UTILITY NOTES:

1. PROPER COORDINATION WITH THE RESPECTIVE UTILITY COMPANIES SHALL BE PERFORMED BY THE CONTRACTOR TO INSURE THAT ALL UTILITY COMPANY, CONNOQUENESSING TOWNSHIP, AND/OR BUTLER COUNTY STANDARDS FOR MATERIALS AND CONSTRUCTION METHODS ARE MET.
2. ALL EXISTING PAVEMENT WHERE UTILITY PIPING IS TO BE INSTALLED SHALL BE SAW CUT AND REPLACED IN ACCORDANCE WITH THE PAVEMENT REPAIR REQUIREMENTS AS DETAILED.
3. ALL SANITARY SEWER LATERALS SHALL CONFORM TO THE DEPARTMENT OF ENVIRONMENTAL PROTECTION, APPLICABLE COUNTY REQUIREMENTS AND THE CONNOQUENESSING TOWNSHIP.
4. ALL PIPES SHALL BE LAID ON STRAIGHT ALIGNMENTS AND EVEN GRADES USING A PIPE LASER OR OTHER ACCURATE METHOD.
5. SANITARY LATERAL SHALL MAINTAIN 10' MIN. HORIZONTAL AND 1.5' MIN. VERTICAL SEPARATION DISTANCE FROM WATER LINES. A 1-FOOT MIN. CLEARANCE SHALL BE MAINTAINED BETWEEN GAS, ELECTRICAL, TELEPHONE, AND STORM SEWER LINES.
6. RELOCATION OF ANY UTILITY COMPANY FACILITIES SHALL BE DONE IN ACCORDANCE WITH THE REQUIREMENTS OF THE UTILITY COMPANY AND CONNOQUENESSING TOWNSHIP.
7. THE CONTRACTOR SHALL COMPACT PIPE BACKFILL IN MAX. 8" LOOSE LIFTS TO 95% OF THE MAXIMUM DRY DENSITY PER ASTM D1557, ACCORDING TO THE PIPE BEDDING DETAILS. TRENCH BOTTOM SHALL BE STABLE IN HIGH GROUNDWATER AREAS. A PIPE FOUNDATION SHALL BE USED IN AREAS OF ROCK EXCAVATION.
8. ALL UTILITY CONSTRUCTION IS SUBJECT TO INSPECTION PRIOR TO APPROVAL FOR BACKFILL, IN ACCORDANCE WITH THE APPROPRIATE UTILITY COMPANY.
9. MANHOLE RIMS AND CATCH BASIN GRATES SHALL BE SET TO ELEVATIONS SHOWN. SET ALL EXISTING MANHOLE FRAMES AND COVERS, CATCH BASIN GRATES, VALVE BOXES, ETC., TO BE RAISED OR LOWERED, TO PROPOSED FINISHED GRADE, FLUSH WITH THE ADJACENT GRADE.
10. THE CONTRACTOR SHALL RESTORE ANY STRUCTURE, PIPE, UTILITY, PAVEMENT, CURBS, SIDEWALKS, LANDSCAPED AREAS, ETC. DISTURBED DURING CONSTRUCTION TO THE ORIGINAL CONDITION OR BETTER.
11. THE CONTRACTOR SHALL SUBMIT SHOP DRAWINGS OF MATERIALS AND STRUCTURES TO THE CONSTRUCTION MANAGER AND LOCAL GOVERNING AGENCIES FOR REVIEW AND APPROVAL PRIOR TO FABRICATION.
12. THE CONTRACTOR SHALL CONTACT THE BUTLER COUNTY HEALTH DEPARTMENT AND FILE AND OBTAIN A PLUMBING PERMIT FOR THE WORK INDICATED HEREON AND COMPLIANCE WITH BUTLER COUNTY REQUIREMENTS.
13. UNLESS OTHERWISE NOTED, ALL UTILITIES ARE TO BE EXTENDED TO WITHIN 5 FEET OF THE BUILDING FOR CONNECTION BY THE BUILDING CONTRACTOR.
14. ALL UTILITIES TO THE SITE ARE TO BE UNDERGROUND.

STORM SEWERS:

1. UNLESS OTHERWISE INDICATED ON THE DRAWINGS, STORM SEWER PIPING SHALL BE SMOOTH INTERIOR HIGH DENSITY POLYETHYLENE PIPE (H.D.P.E.).
2. HIGH DENSITY POLYETHYLENE (HDPE) STORM SEWER PIPE SHALL BE AS MANUFACTURED BY ADS, INC. HDPE PIPE SHALL HAVE A SMOOTH INTERIOR AND CORRUGATED EXTERIOR. 12" TO 42" PIPE SHALL MEET THE REQUIREMENTS OF AASHTO M294, TYPE S. PIPE SECTIONS SHALL BE JOINED WITH COUPLING BANDS OR EXTERNAL SNAP COUPLERS COVERING AT LEAST 2 FULL CORRUGATIONS ON EACH END OF THE PIPE. ALL HDPE PIPE SHALL BE PROVIDED WITH TYPE 3 (WATER-TIGHT) CONNECTIONS AND SHALL INCORPORATE AN ELASTOMERIC GASKET MEETING THE REQUIREMENTS OF ASTM F477. DIAMETERS 24" AND SMALLER SHALL MEET ASTM D3212. GASKETS SHALL BE INSTALLED ON THE CONNECTIONS BY THE PIPE MANUFACTURER.
3. REINFORCED CONCRETE PIPE (RCP) SHALL MEET THE REQUIREMENTS OF ASTM C76, CLASS III. RUBBER GASKETS SHALL CONFORM TO THE JOINT REQUIREMENTS OF ASTM C443 FOR O-RING GASKET FOR BELL AND SPIGOT PIPE.

SANITARY SEWERS:

1. UNLESS OTHERWISE INDICATED ON THE DRAWINGS, ALL SANITARY SEWER PIPING SHALL BE POLYVINYL CHLORIDE (PVC) PIPE AND FITTINGS A.S.T.M. D-3034, TYPE PSM WITH A SDR OF 35, WITH FLEXIBLE ELASTOMERIC SEAL JOINTS, A.S.T.M. D-3212.
2. ALL SANITARY SEWER PIPING SHALL HAVE A MINIMUM OF 6" OF PENN D.O.T. NO. 2A BEDDING MATERIAL AND A MINIMUM OF 1'-0" OF NO. 2A COARSE AGGREGATE ABOVE THE TOP OF PIPE. INSTALL DETECTABLE MYLAR MARKING TAPE AS SPECIFIED MAX. 2 FT. BELOW FINISHED GRADE. TAPE SHALL BEAR THE WORDS "CAUTION-SEWER LINE BURIED BELOW."
3. THE CONTRACTOR SHALL FURNISH TO THE ENGINEER A MARKED PRINT INDICATING "AS-BUILT" SANITARY SEWER WYE LOCATIONS AND THE LOCATION AND ELEVATION OF THE ENDS OF ALL 6" LATERALS.

WATER LINES:

1. MAINTAIN MINIMUM 18" VERTICAL SEPARATION AND 10' HORIZONTAL SEPARATION BETWEEN SANITARY SEWER AND WATERLINE (OR AS REQUIRED BY PA-AMERICAN WATER COMPANY).
2. THE DEPTH OF THE WATER LINE SHALL BE SUCH AS TO HAVE A MINIMUM OF 4 FEET OF COVER ABOVE THE TOP OF THE PIPE TO FINAL GRADE. WHERE POSSIBLE, THE MAXIMUM DEPTH OF WATER LINE SHALL BE 5 FEET. ANY DEPTHS OUTSIDE THIS RANGE SHOULD BE INDICATED ON THE CONSTRUCTION PLANS.
3. WATER LINE (6") SHALL BE DUCTILE IRON PIPE CONFORMING WITH THE ANSI A 21.50 AND A 21.51 SPECIFICATIONS-THICKNESS CLASS 52. FITTINGS SHALL ALSO BE FABRICATED OF DUCTILE IRON CONFORMING TO ANSI 21.10. WITH A MINIMUM 350 PSI PRESSURE CLASSIFICATION. JOINTS SHALL BE IN ACCORDANCE WITH THE ANSI SPECIFICATIONS A 21.11 FOR MECHANICAL JOINTS. LINING ON ALL DUCTILE IRON PIPE AND FITTINGS SHALL BE HALF-THICKNESS CEMENT MORTAR IN ACCORDANCE WITH ANSI A 21.4. DOMESTIC LINES SHALL BE 1" DIA. COPPER.
4. ALL WATER LINES SHALL BE DISINFECTED AND TESTED ACCORDING TO THE REQUIREMENTS OF THE PA-AMERICAN WATER CO.
5. ALL SERVICE LINES SHALL BE COORDINATED WITH THE SITE CONTRACTOR, LANDSCAPE ARCHITECT, AND THE OWNER'S REPRESENTATIVE PRIOR TO INSTALLATION.
6. INSTALL 4" OF SAND BEDDING AND 4" SAND BACKFILL OVER TOP OF DUCTILE IRON PIPE. INSTALL TRACER WIRE; TERMINATE IN GATE BOX AT EACH END. INSTALL DETECTABLE WARNING TAPE 18" BELOW GRADE.

SITE LIGHTING:

1. CONDUIT SHALL BE 1" PVC SCHEDULE 40, BURIED A MINIMUM OF 24" BELOW PAVING SUBGRADE. REFER TO SITE PLAN ENLARGEMENT (C-3) FOR POLE LOCATIONS. REFER TO SITE ELECTRIC PLAN FOR LIGHTING LAYOUT.

LEGEND

- PROPERTY LINE
- EXISTING STORM MANHOLE
- EXISTING INLET
- PROPOSED INLET
- EXISTING STORM SEWER
- PROPOSED STORM SEWER
- PROPOSED ROOF DRAIN
- EXISTING SIGN
- EXISTING UTILITY POLE
- EXISTING OVERHEAD LINE
- PROPOSED UNDERGROUND ELECTRIC
- PROPOSED UNDERGROUND COMMUNICATIONS
- PROPOSED SANITARY SEWER
- PROPOSED CLEANOUT
- PROPOSED LIGHTING
- EXISTING WATER LINE
- PROPOSED WATER LINE
- EXISTING FIRE HYDRANT
- EXISTING WATER VALVE
- EXISTING GAS LINE
- EXISTING GAS VALVE
- PAINTED ISLAND
- LIMIT OF WORK
- MEDIUM DUTY ASPHALT 4/C-17
- HEAVY DUTY ASPHALT 5/C-17
- CONCRETE PAVING
- PERVIOUS PAVERS 7/C-18
- GRAVEL

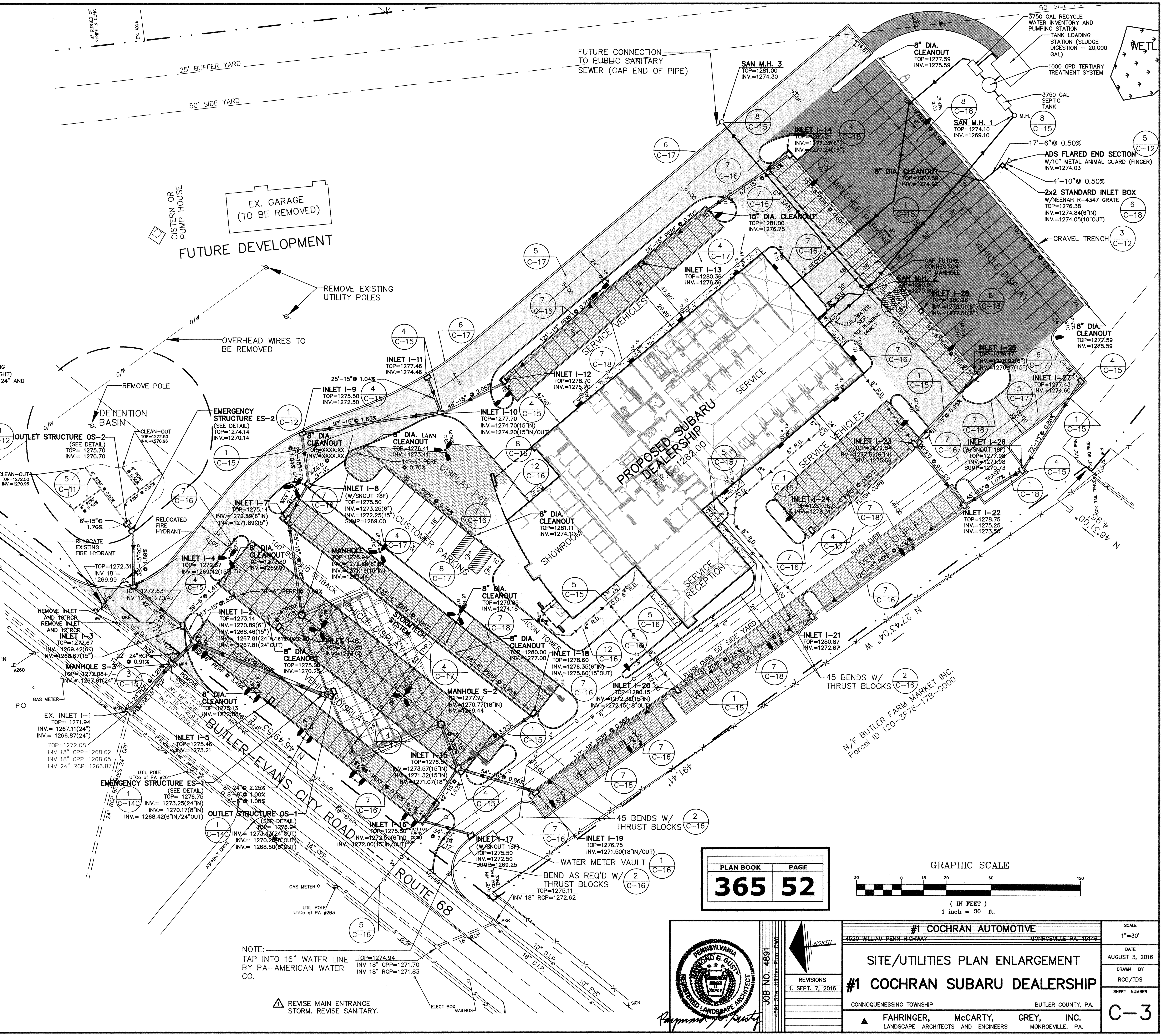

PLAN BOOK	PAGE
365	52

GRAPHIC SCALE

(IN FEET)
1 inch = 30 ft.

#1 COCHRAN AUTOMOTIVE
4520 WILLIAM PENN HIGHWAY — MONROEVILLE PA, 15146

SITE/UTILITIES PLAN ENLARGEMENT

#1 COCHRAN SUBARU DEALERSHIP

CONNOQUENESSING TOWNSHIP — BUTLER COUNTY, PA.

FAHRINGER, McCARTY, GREY, INC.
LANDSCAPE ARCHITECTS AND ENGINEERS — MONROEVILLE, PA.

JOB NO. 4891
4891 Site Utilities Plan .DWG

REVISIONS
1. SEPT. 7, 2016

SCALE 1"=30'
DATE AUGUST 3, 2016
DRAWN BY RGG/TDS
SHEET NUMBER C-3

PENNSYLVANIA RAYMOND G. GUSTY REGISTERED LANDSCAPE ARCHITECT

BUTTERCUP SCHOOL ROAD – 40' R.O.W.

N/F DANNY & KRYSTIN L. COLEMAN
Parcel ID 120-3F47-2AD-0000

N/F DONALD L. & DELORES L.
Parcel ID 120-3F47-2AE-0000

N/F SYLVIA L. & STACEY L. GEYER
Parcel ID 120-3F47-2AF-0000

N/F CLIFFORD F. & DEBORAH A. PICKERD
Parcel ID 120-3F47-2AG-0000

N/F LEONARD R. & LORI L. CAVANAUGH
Parcel ID 120-3F47-2AH-0000

N/F DAVID S. & LESLIE L. SPINNENWEBER
Parcel ID 120-3F47-2R-0000

N/F GEORGE L. ABBOTT, ET. AL
Parcel ID 120-3F18-20A-0000

N/F LEE R. & KATHRYN R. CHRISTMANN
Parcel ID 120-58-F5-0000

N/F DONALD J. SLATER & CYNTHIA L. SLATER
Parcel ID 120-58-F48-0000

N/F MKS PARTNERSHIP L.P.
Parcel ID 120-3F47-

N/F BUTLER FARM MARKET INC.
Parcel ID 120-5F76-178-0000

WETLAND

25' BUFFER YARD

FUTURE CONNECTION TO PUBLIC SANITARY SEWER (CAPPED)

3750 GAL RECYCLE WATER INVENTORY AND PUMPING STATION TANK LOADING STATION (SLUDGE DIGESTION - 20,000 GAL)
1,000-GPD TERTIARY TREATMENT SYSTEM

3750 GAL SEPTIC TANK

EXISTING BRICK GARAGE

CISTERN OR PUMP HOUSE

DETENTION BASIN

CAP FUTURE SANI. LINE

PROPOSED SUBARU DEALERSHIP
F.F.E. 1282.00

SERVICE

SERVICE RECEPTION

SHOWROOM

ICON TOWER

STORMWATER EASEMENT

BUTLER-EVANS CITY ROAD – ROUTE 68

S 86°00'00" E 150.91'

S 86°00'00" E 556.75'

S 03°00'00" W 100.77'

N 03°00'00" E 435.16'

N 45°30'00" E 434.31'

N 23°30'00" W 435.20'

NOTE:
CONTRACTOR SHALL STAKE PROPERTY LINE PRIOR TO ANY GRADING. NO GRADING SHALL OCCUR WITHIN 5 FT. OF ANY DEVELOPMENT PLAN BOUNDARY

LEGEND

- PROPERTY LINE
- EXISTING STORM MANHOLE
- EXISTING INLET
- PROPOSED INLET
- EXISTING STORM SEWER
- PROPOSED STORM SEWER
- PROPOSED ROOF DRAIN
- EXISTING SIGN
- EXISTING UTILITY POLE
- EXISTING OVERHEAD LINE
- PROPOSED SANITARY SEWER
- PROPOSED CLEANOUT
- PROPOSED LIGHTING
- EXISTING WATER LINE
- PROPOSED WATER LINE
- EXISTING FIRE HYDRANT
- EXISTING WATER VALVE
- EXISTING GAS LINE
- EXISTING GAS VALVE
- PAINTED ISLAND
- LIMIT OF WORK

NOTE: VERTICAL DATUM = NAVD 88 BENCH MARK: CAPPED IRON PIN 1274.425

GRADING NOTES:

1. GRADING SHALL BE IN CONFORMANCE WITH CONNOQUENESSING TOWNSHIP STANDARDS, AND ANY AMENDMENTS THERETO. GRADING SHALL ALSO COMPLY WITH PENN DOT 408 SPECIFICATIONS (LATEST EDITION) AS NOTED AND SOILS REPORT PREPARED BY GEO-MECHANICS, INC.
2. CONTOURS SHOWN ARE TO FINISHED GRADE. MAINTAIN POSITIVE DRAINAGE WITHIN THE SITE. SUBGRADE ELEVATIONS SHALL BE ADJUSTED ACCORDING TO PAVEMENT THICKNESS.
3. TOLERANCE OF ROUGH GRADING SHALL BE PLUS OR MINUS ONE-TENTH (0.1) FOOT. UPON COMPLETION OF ROUGH GRADING, THE CONTRACTOR SHALL VERIFY AND RECORD ACCURACY OF ROUGH GRADING. THESE RECORD DRAWINGS SHALL BE REVIEWED BY THE OWNER'S REPRESENTATIVE AND ANY VARIATION GREATER THAN SPECIFIED TOLERANCE SHALL BE CORRECTED BY THE GRADING CONTRACTOR.

GRAPHIC SCALE
40 0 20 40 80 160
(IN FEET)
1 inch = 40 ft.

CAUTION – NOTICE TO THE CONTRACTOR :

THE CONTRACTOR IS SPECIFICALLY CAUTIONED THAT THE LOCATION AND/OR ELEVATION OF EXISTING UTILITIES AS SHOWN ON THESE PLANS IS BASED ON RECORDS OF THE VARIOUS UTILITY COMPANIES AND, WHERE POSSIBLE, MEASUREMENTS TAKEN IN THE FIELD. THE INFORMATION IS NOT TO BE RELIED ON AS BEING EXACT OR COMPLETE. THE CONTRACTOR MUST CALL THE APPROPRIATE UTILITY COMPANY AT LEAST 3 DAYS BEFORE ANY EXCAVATION TO REQUEST EXACT FIELD LOCATION OF UTILITIES. IT SHALL BE THE RESPONSIBILITY OF THE CONTRACTOR TO RELOCATE ALL EXISTING UTILITIES WHICH CONFLICT WITH THE PROPOSED IMPROVEMENTS SHOWN ON THE PLANS.

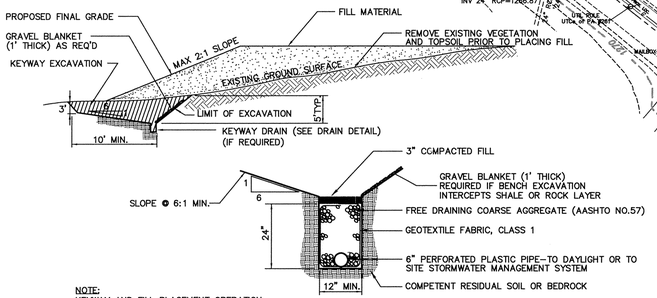

NOTE:
KEYWAY AND FILL PLACEMENT OPERATION TO BE FIELD MONITORED BY A GEOTECHNICAL ENGINEER

1 / C-4 TYPICAL BENCH & KEYWAY DETAIL
NO SCALE

⚠2 ADJUST GRADING ALONG BUTLER FARM MARKET PROPERTY LINE.

⚠1 REVISE MAIN ENTRANCE STORM SEWER. REVISE SANITARY. ADD WETLAND.

PLAN BOOK	PAGE
365	53

PENNSYLVANIA RAYMOND G. GUSTY REGISTERED LANDSCAPE ARCHITECT

JOB NO. 4891

NORTH

REVISIONS
1. SEPT. 7, 2016
2. SEPT. 26, 2016

#1 COCHRAN AUTOMOTIVE
4520 WILLIAM PENN HIGHWAY MONROEVILLE, PA. 15146

GRADING AND DRAINAGE PLAN
#1 COCHRAN SUBARU DEALERSHIP

CONNOQUENESSING TOWNSHIP BUTLER COUNTY, PA.

FAHRINGER, McCARTY, GREY, INC.
LANDSCAPE ARCHITECTS AND ENGINEERS MONROEVILLE, PA.

SCALE 1"=40'
DATE AUGUST 3, 2016
DRAWN BY RGG/TDS
SHEET NUMBER C-4

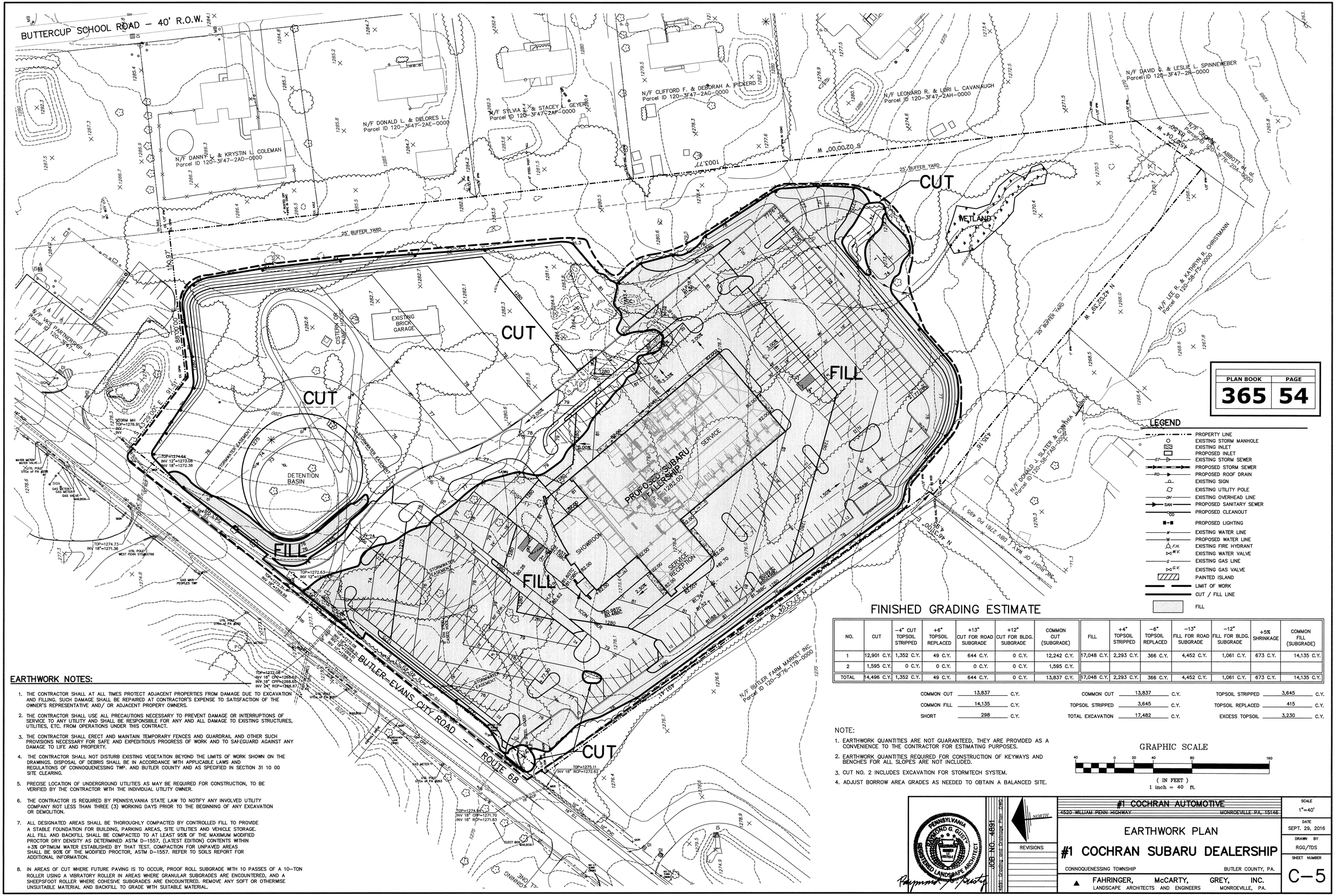

PLAN BOOK	PAGE
365	54

EARTHWORK NOTES:

1. THE CONTRACTOR SHALL AT ALL TIMES PROTECT ADJACENT PROPERTIES FROM DAMAGE DUE TO EXCAVATION AND FILLING. SUCH DAMAGE SHALL BE REPAIRED AT CONTRACTOR'S EXPENSE TO SATISFACTION OF THE OWNER'S REPRESENTATIVE AND/ OR ADJACENT PROPERY OWNERS.
2. THE CONTRACTOR SHALL USE ALL PRECAUTIONS NECESSARY TO PREVENT DAMAGE OR INTERRUPTIONS OF SERVICE TO ANY UTILITY AND SHALL BE RESPONSIBLE FOR ANY AND ALL DAMAGE TO EXISTING STRUCTURES, UTILITIES, ETC. FROM OPERATIONS UNDER THIS CONTRACT.
3. THE CONTRACTOR SHALL ERECT AND MAINTAIN TEMPORARY FENCES AND GUARDRAIL AND OTHER SUCH PROVISIONS NECESSARY FOR SAFE AND EXPEDITIOIUS PROGRESS OF WORK AND TO SAFEGUARD AGAINST ANY DAMAGE TO LIFE AND PROPERTY.
4. THE CONTRACTOR SHALL NOT DISTURB EXISTING VEGETATION BEYOND THE LIMITS OF WORK SHOWN ON THE DRAWINGS. DISPOSAL OF DEBRIS SHALL BE IN ACCORDANCE WITH APPLICABLE LAWS AND REGULATIONS OF CONNOQUENESSING TWP. AND BUTLER COUNTY AND AS SPECIFIED IN SECTION 31 10 00 SITE CLEARING.
5. PRECISE LOCATION OF UNDERGROUND UTILITIES AS MAY BE REQUIRED FOR CONSTRUCTION, TO BE VERIFIED BY THE CONTRACTOR WITH THE INDIVIDUAL UTILITY OWNER.
6. THE CONTRACTOR IS REQUIRED BY PENNSYLVANIA STATE LAW TO NOTIFY ANY INVOLVED UTILITY COMPANY NOT LESS THAN THREE (3) WORKING DAYS PRIOR TO THE BEGINNING OF ANY EXCAVATION OR DEMOLITION.
7. ALL DESIGNATED AREAS SHALL BE THOROUGHLY COMPACTED BY CONTROLLED FILL TO PROVIDE A STABLE FOUNDATION FOR BUILDING, PARKING AREAS, SITE UTILITIES AND VEHICLE STORAGE. ALL FILL AND BACKFILL SHALL BE COMPACTED TO AT LEAST 95% OF THE MAXIMUM MODIFIED PROCTOR DRY DENSITY AS DETERMINED ASTM D-1557, (LATEST EDITION) CONTENTS WITHIN +3% OPTIMUM WATER ESTABLISHED BY THAT TEST. COMPACTION FOR UNPAVED AREAS SHALL BE 90% OF THE MODIFIED PROCTOR, ASTM D-1557. REFER TO SOILS REPORT FOR ADDITIONAL INFORMATION.
8. IN AREAS OF CUT WHERE FUTURE PAVING IS TO OCCUR, PROOF ROLL SUBGRADE WITH 10 PASSES OF A 10-TON ROLLER USING A VIBRATORY ROLLER IN AREAS WHERE GRANULAR SUBGRADES ARE ENCOUNTERED, AND A SHEEPSFOOT ROLLER WHERE COHESIVE SUBGRADES ARE ENCOUNTERED. REMOVE ANY SOFT OR OTHERWISE UNSUITABLE MATERIAL AND BACKFILL TO GRADE WITH SUITABLE MATERIAL.

FINISHED GRADING ESTIMATE

NO.	CUT	-4" CUT TOPSOIL STRIPPED	+6" TOPSOIL REPLACED	+13" CUT FOR ROAD SUBGRADE	+12" CUT FOR BLDG. SUBGRADE	COMMON CUT (SUBGRADE)	FILL	+4" TOPSOIL STRIPPED	-6" TOPSOIL REPLACED	-13" FILL FOR ROAD SUBGRADE	-12" FILL FOR BLDG. SUBGRADE	+5% SHRINKAGE	COMMON FILL (SUBGRADE)
1	12,901 C.Y.	1,352 C.Y.	49 C.Y.	644 C.Y.	0 C.Y.	12,242 C.Y.	17,048 C.Y.	2,293 C.Y.	366 C.Y.	4,452 C.Y.	1,061 C.Y.	673 C.Y.	14,135 C.Y.
2	1,595 C.Y.	0 C.Y.	0 C.Y.	0 C.Y.	0 C.Y.	1,595 C.Y.							
TOTAL	14,496 C.Y.	1,352 C.Y.	49 C.Y.	644 C.Y.	0 C.Y.	13,837 C.Y.	17,048 C.Y.	2,293 C.Y.	366 C.Y.	4,452 C.Y.	1,061 C.Y.	673 C.Y.	14,135 C.Y.

COMMON CUT 13,837 C.Y.
COMMON FILL 14,135 C.Y.
SHORT 298 C.Y.

COMMON CUT 13,837 C.Y.
TOPSOIL STRIPPED 3,645 C.Y.
TOTAL EXCAVATION 17,482 C.Y.

TOPSOIL STRIPPED 3,645 C.Y.
TOPSOIL REPLACED 415 C.Y.
EXCESS TOPSOIL 3,230 C.Y.

NOTE:

1. EARTHWORK QUANTITIES ARE NOT GUARANTEED, THEY ARE PROVIDED AS A CONVENIENCE TO THE CONTRACTOR FOR ESTIMATING PURPOSES.
2. EARTHWORK QUANTITIES REQUIRED FOR CONSTRUCTION OF KEYWAYS AND BENCHES FOR ALL SLOPES ARE NOT INCLUDED.
3. CUT NO. 2 INCLUDES EXCAVATION FOR STORMTECH SYSTEM.
4. ADJUST BORROW AREA GRADES AS NEEDED TO OBTAIN A BALANCED SITE.

GRAPHIC SCALE

40 0 20 40 80 160

(IN FEET)
1 inch = 40 ft.

PENNSYLVANIA RAYMOND G. GUSTY REGISTERED LANDSCAPE ARCHITECT

JOB NO. 4891

4891 Grading and Drainage Plan.DWG

NORTH

REVISIONS

#1 COCHRAN AUTOMOTIVE
4520 WILLIAM PENN HIGHWAY MONROEVILLE PA, 15146

EARTHWORK PLAN
#1 COCHRAN SUBARU DEALERSHIP

CONNOQUENESSING TOWNSHIP BUTLER COUNTY, PA.

FAHRINGER, McCARTY, GREY, INC.
LANDSCAPE ARCHITECTS AND ENGINEERS MONROEVILLE, PA.

SCALE	DATE	DRAWN BY	SHEET NUMBER
1"=40'	SEPT. 29, 2016	RGG/TDS	C-5

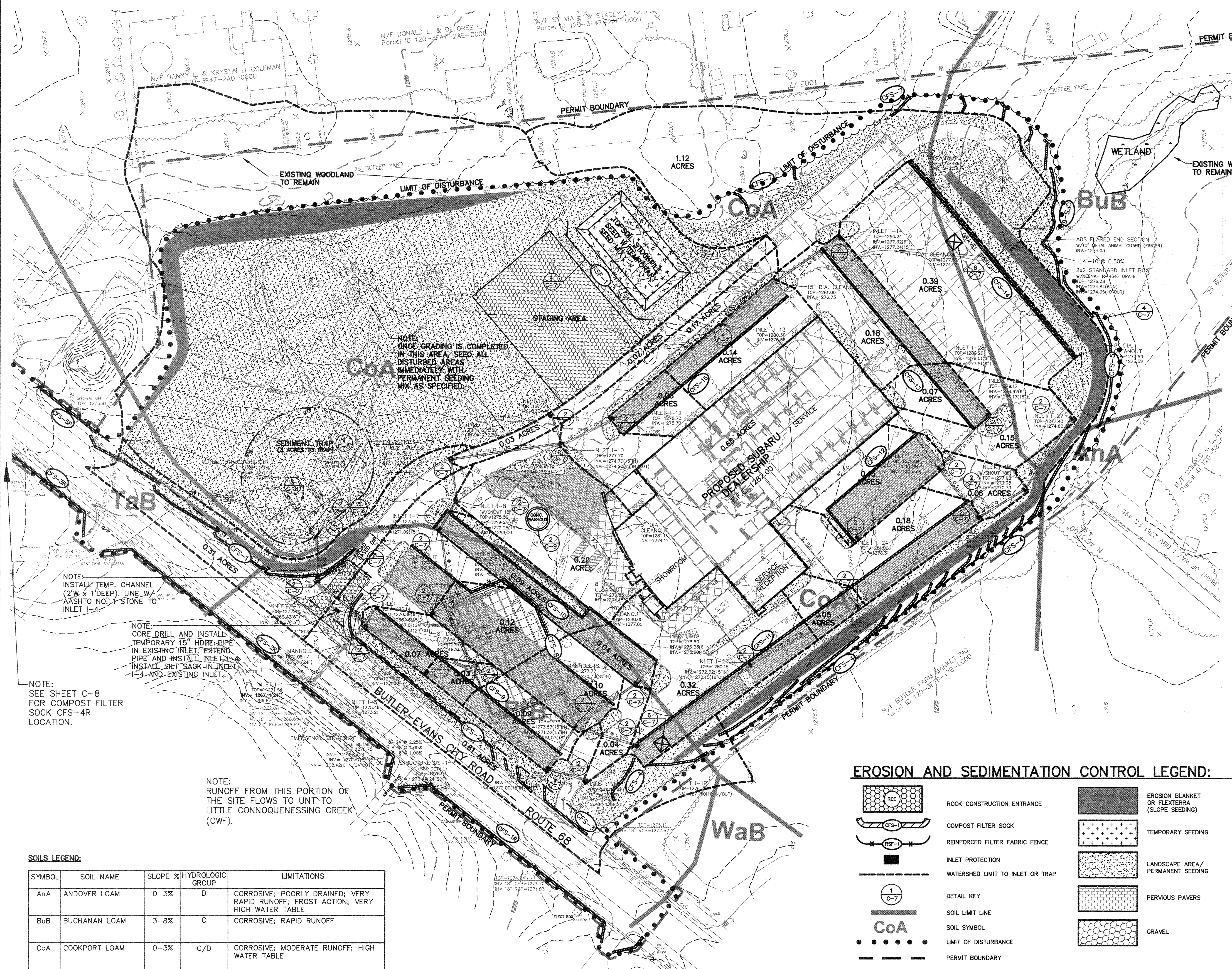

EROSION AND SEDIMENTATION CONTROL NOTES:

1. ALL SOIL EROSION AND SEDIMENTATION CONTROL PLANS AND DETAILS (DRAWINGS C-6, C-6A, C-7, C-8 C-9 AND C-10) MUST BE AVAILABLE ON-SITE AND CONTROLS IMPLEMENTED PRIOR TO GRADING ACTIVITIES.
2. ANY QUESTIONS REGARDING THIS PLAN MAY BE DIRECTED TO FAHRINGER, McCARTY, GREY, INC.
3. ANY POOR SOILS DISCOVERED ON SITE MUST BE TAKEN TO AN APPROVED DISPOSAL AREA.
4. CHAPTER 93 CLASSIFICATION:
THE PROPOSED STORM SYSTEM (POI 2)WILL ULTIMATELY BE CONVEYED TO CONNOQUENESSING CREEK, WHICH HAS A CLASSIFICATION OF WWF (WARM WATER FISHES.). RUNOFF FROM UNT (POI 1) FLOWS TO LITTLE CONNOQUENESSING CREEK, WHICH HAS A CLASSIFICATION OF CWF (COLD WATER FISHES).
5. DUE TO THE EXISTING SOIL LIMITATIONS (AS NOTED IN THE NARRATIVE) THE FOLLOWING REMEDIATIONS SHALL BE FOLLOWED PRIOR TO ANY EARTHWORK ACTIVITY: (1) ALL EROSION CONTROL MEASURES SHALL BE IN PLACE (2) FOR TRENCHING, LAY BACK SLOPES OR PROVIDE BRACING OR TRENCH BOX (3) INSTALL SUBDRAINS IN ANY WET AREAS. (4) FOLLOW RECOMMENDATIONS IN THE SOILS REPORT.

FILL MATERIAL NOTES:

1. IT IS ANTICIPATED THAT NO FILL MATERIAL WILL BE REQUIRED FOR THIS PROJECT.
2. ANY POOR SOILS DISCOVERED ON SITE SHALL BE HAULED TO AN APPROVED DISPOSAL SITE.
3. NO FILL MATERIAL IS ANTICIPATED FOR THIS PROJECT, HOWEVER IF FILL MATERIAL NEEDS TO BE IMPORTED FROM AN OFFSITE LOCATION, THE CONTRACTOR IS RESPONSIBLE FOR PERFORMING ENVIRONMENTAL DUE DILIGENCE AND DETERMINING IF IMPORTED MATERIAL IS DEFINED AS CLEAN FILL. (REFER TO NOTES 4 AND 5).
4. CLEAN FILL IS DEFINED AS: UNCONTAMINATED, NO-WATER SOLUBLE, NON-DECOMPOSABLE, INERT, SOLID MATERIAL. THE TERM INCLUDES SOIL, ROCK, STONE, DREDGED MATERIAL, USED ASPHALT, AND BRICK, BLOCK OR CONCRETE FROM CONSTRUCTION AND DEMOLITION ACTIVITIES THAT IS SEPARATE FROM OTHER WASTE AND IS RECOGNIZABLE AS SUCH. THE TERM DOES NOT INCLUDE MATERIALS PLACED IN OR ON THE WATERS OF THE COMMONWEALTH UNLESS OTHERWISE AUTHORIZED. (THE TERM "USED ASPHALT" DOES NOT INCLUDE MILLED ASPHALT OR ASPHALT THAT HAS BEEN PROCESSED FOR RE-USE.) CLEAN FILL AFFECTED BY A SPILL OR RELEASE OF A REGULATED SUBSTANCE: FILL MATERIALS AFFECTED BY A SPILL OR RELEASE OF A REGULATED SUBSTANCE STILL QUALIFIES AS CLEAN FILL PROVIDED THE TESTING REVEALS THAT THE FILL MATERIAL CONTAINS CONCENTRATIONS OF REGULATED SUBSTANCES THAT ARE BELOW THE RESIDENTIAL LIMITS IN TABLES FP-1A AND FP-1B FOUND IN THE DEPARTMENT'S POLICY "MANAGEMENT OF FILL".ANY PERSON PLACING CLEAN FILL THAT HAS BEEN AFFECTED BY A SPILL OR RELEASE OF A REGULATED SUBSTANCE MUST USE FORM FP-001 TO CERTIFY THE ORIGIN OF THE FILL MATERIAL AND THE RESULTS OF THE ANALYTICAL TESTING TO QUALIFY THE MATERIAL AS CLEAN FILL. FORM FP-001 MUST BE RETAINED BY THE OWNER OF THE PROPERTY RECEIVING THE FILL.
5. ENVIRONMENTAL DUE DILIGENCE: INVESTIGATIVE TECHNIQUES, INCLUDING, BUT NOT LIMITED TO, VISUAL PROPERTY INSPECTIONS, ELECTRONIC DATA BASE SEARCHES, REVIEW OF PROPERTY OWNERSHIP, REVIEW OF PROPERTY USE HISTORY, SANBORN MAPS, ENVIRONMENTAL QUESTIONNAIRES, TRANSACTION SCREENS, ANALYTICAL TESTING, ENVIRONMENTAL ASSESSMENTS OR AUDITS. ANALYTICAL TESTING IS NOT A REQUIRED PART OF DUE DILIGENCE UNLESS VISUAL INSPECTION AND/OR REVIEW OF THE PAST LAND USE OF THE PROPERTY INDICATES THAT THE FILL MAY HAVE BEEN SUBJECTED TO A SPILL OR RELEASE OF REGULATED SUBSTANCE. IF THE FILL MAY HAVE BEEN AFFECTED BY A SPILL OR RELEASE OF A REGULATED SUBSTANCE, IT MUST BE TESTED TO DETERMINE IF IT QUALIFIES AS CLEAN FILL. TESTING SHOULD BE PERFORMED IN ACCORDANCE WITH APPENDIX A OF THE DEPARTMENT'S POLICY.

PROCEDURES WHICH ENSURE THAT THE PROPER MEASURES FOR THE RECYCLING OR DISPOSAL OF MATERIALS ASSOCIATED WITH OR FROM THE PROJECT SITE WILL BE UNDERTAKEN IN ACCORDANCE WITH DEPARTMENT REGULATIONS.

1. ALL CONSTRUCTION WASTES INCLUDE, BUT ARE NOT LIMITED TO, BUILDING MATERIAL (IE BRICK, CONCRETE BLOCK, WOOD FRAMING ETC) EXCESS SOIL MATERIAL, CONCRETE WASH WATER, MISCELLANEOUS UTILITY LINES AS WELL AS OTHER MATERIAL ASSOCIATED WITH BUILDING CONSTRUCTION. RECYCLE CONSTRUCTION WASTES WHEN POSSIBLE. ALL OTHER MATERIAL MUST BE TAKEN TO AN APPROVED LAND FILL.
2. ALL DEMOLITION WASTES INCLUDE, BUT ARE NOT LIMITED TO BUILDING MATERIAL SUCH AS BRICK, CONCRETE BLOCK, WOOD FRAMING, ETC. WASTES WOULD ALSO INCLUDE ASPHALT PAVING REMOVED OR MILLED. RECYCLE DEMOLITION WASTES WHEN POSSIBLE. ALL OTHER MATERIAL MUST BE TAKEN TO AN APPROVED LANDFILL.
3. BORROW AREAS AND SOIL OR ROCK DISPOSAL AREAS LOCATED OUTSIDE OF THE PROJECT LIMITS SHALL BE APPROVED SITES OR SHALL OBTAIN APPROVAL PRIOR TO EARTHWORK OPERATIONS BY THE BUTLER COUNTY CONSERVATION DISTRICT.

NOTE: AT THE END OF EACH CONSTRUCTION DAY, ALL SEDIMENT DEPOSITED ON ROADWAYS OR DRIVEWAYS SHALL BE SWEPT AND NOT WASHED. SEDIMENT SHALL BE REMOVED AND RETURNED TO THE CONSTRUCTION SITE.

EROSION AND SEDIMENTATION CONTROL LEGEND:

- RCE — ROCK CONSTRUCTION ENTRANCE
- CFS-1 — COMPOST FILTER SOCK
- RSF-1 — REINFORCED FILTER FABRIC FENCE
- INLET PROTECTION
- WATERSHED LIMIT TO INLET OR TRAP
- 1/C-7 — DETAIL KEY
- SOIL LIMIT LINE
- CoA — SOIL SYMBOL
- LIMIT OF DISTURBANCE
- PERMIT BOUNDARY
- CONSTRUCTION FENCE (INSTALL AROUND PERIMETER OF ALL PERVIOUS PAVEMENT AREAS AND STORMTECH FOOTPRINT)
- EROSION BLANKET OR FLEXTERRA (SLOPE SEEDING)
- TEMPORARY SEEDING
- LANDSCAPE AREA/ PERMANENT SEEDING
- PERVIOUS PAVERS
- GRAVEL

GRAPHIC SCALE

40 0 20 40 80 160

(IN FEET)
1 inch = 40 ft.

SOILS LEGEND:

SYMBOL	SOIL NAME	SLOPE %	HYDROLOGIC GROUP	LIMITATIONS
AnA	ANDOVER LOAM	0-3%	D	CORROSIVE; POORLY DRAINED; VERY RAPID RUNOFF; FROST ACTION; VERY HIGH WATER TABLE
BuB	BUCHANAN LOAM	3-8%	C	CORROSIVE; RAPID RUNOFF
CoA	COOKPORT LOAM	0-3%	C/D	CORROSIVE; MODERATE RUNOFF; HIGH WATER TABLE
ErB	ERNEST SILT LOAM	3-8%	C/D	CORROSIVE; MODERATE RUNOFF; HIGH WATER TABLE
TaB	TILSIT SILT LOAM	3-8%	C/D	CORROSIVE; RAPID RUNOFF; FROST ACTION; HIGH WATER TABLE
WaB	WHARTON SILT LOAM	3-8%	C/D	CORROSIVE; HIGH WATER TABLE; VERY SLOW PERMEABILITY

PLAN BOOK	PAGE
365	55

4 REVISE COMPOST FILTER SOCK LOCATIONS; ADD STAGING AREA; REVISE TEMP. SEEDING; DELETE INLET PROTECTION WITHIN RT. 68 R.O.W.

3 REVISIONS AS PER BCCD COMPLETENESS REVIEW.

2 REVISE PERMIT BOUNDARY AND LIMIT OF DISTURBANCE.

1 ADD WETLAND. REVISE MAIN ENTRANCE STORM. REVISE SANITARY.

PENNSYLVANIA RAYMOND G. GUSTY REGISTERED LANDSCAPE ARCHITECT NUMBER LA 000769-E

JOB NO. 4891

4891 Erosion Control Plan .DWG

NORTH

REVISIONS
1. SEPT. 7, 2016
2. OCT. 24, 2016
3. DEC. 9, 2016
4. FEB. 6, 2017

~~#1 COCHRAN AUTOMOTIVE~~
~~4520 WILLIAM PENN HIGHWAY MONROEVILLE PA, 15146~~

SOIL EROSION AND SEDIMENTATION CONTROL PLAN
#1 COCHRAN SUBARU DEALERSHIP

CONNOQUENESSING TOWNSHIP BUTLER COUNTY, PA.

FAHRINGER, McCARTY, GREY, INC.
LANDSCAPE ARCHITECTS AND ENGINEERS MONROEVILLE, PA.

SCALE 1"=40'

DATE AUGUST 3, 2016

DRAWN BY RGG/TDS

SHEET NUMBER C-6

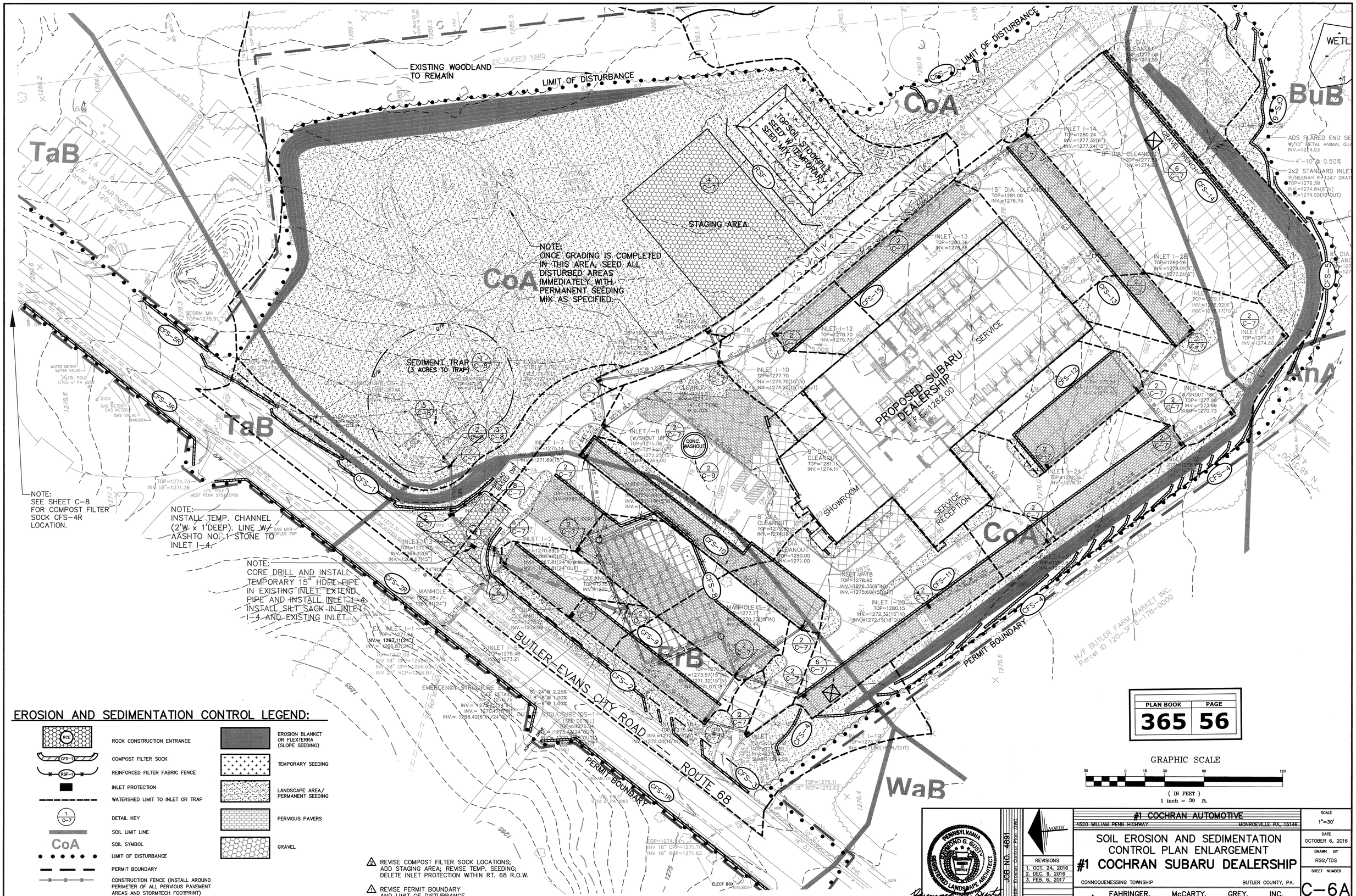

EROSION AND SEDIMENTATION CONTROL LEGEND:

- ROCK CONSTRUCTION ENTRANCE
- COMPOST FILTER SOCK
- REINFORCED FILTER FABRIC FENCE
- INLET PROTECTION
- WATERSHED LIMIT TO INLET OR TRAP
- DETAIL KEY
- SOIL LIMIT LINE
- SOIL SYMBOL
- LIMIT OF DISTURBANCE
- PERMIT BOUNDARY
- CONSTRUCTION FENCE (INSTALL AROUND PERIMETER OF ALL PERVIOUS PAVEMENT AREAS AND STORMTECH FOOTPRINT)
- EROSION BLANKET OR FLEXTERRA (SLOPE SEEDING)
- TEMPORARY SEEDING
- LANDSCAPE AREA/ PERMANENT SEEDING
- PERVIOUS PAVERS
- GRAVEL

2 REVISE COMPOST FILTER SOCK LOCATIONS; ADD STAGING AREA; REVISE TEMP. SEEDING; DELETE INLET PROTECTION WITHIN RT. 68 R.O.W.

1 REVISE PERMIT BOUNDARY AND LIMIT OF DISTURBANCE.

PLAN BOOK	PAGE
365	56

GRAPHIC SCALE

30 0 15 30 60 120

(IN FEET)
1 inch = 30 ft.

PENNSYLVANIA RAYMOND G. GUSTY REGISTERED LANDSCAPE ARCHITECT

JOB NO. 4891

4891 Erosion Control Plan DWG

NORTH

REVISIONS
1. OCT. 24, 2016
2. DEC. 9, 2016
3. FEB. 6, 2017

#1 COCHRAN AUTOMOTIVE
4520 WILLIAM PENN HIGHWAY MONROEVILLE PA, 15146

SOIL EROSION AND SEDIMENTATION CONTROL PLAN ENLARGEMENT
#1 COCHRAN SUBARU DEALERSHIP

CONNOQUENESSING TOWNSHIP BUTLER COUNTY, PA.

FAHRINGER, McCARTY, GREY, INC.
LANDSCAPE ARCHITECTS AND ENGINEERS MONROEVILLE, PA.

SCALE 1"=30'
DATE OCTOBER 6, 2016
DRAWN BY RGG/TDS
SHEET NUMBER C-6A

STORMWATER BMP MAINTENANCE GUIDELINES

THE MAINTENANCE PLAN IS TO BE IMPLEMENTED PER THE STANDARDS AND SPECIFICATIONS SET FORTH BY THE TOWNSHIP OF CONNOQUENESSING ORDINANCE CHAPTER 230, ARTICLE VIII AND AS FOLLOWS:

THE STORMWATER MANAGEMENT FACILITIES WILL BE OWNED AND MAINTAINED BY:

#1 COCHRAN AUTOMOTIVE
4520 WILLIAM PENN HIGHWAY
MONROEVILLE, PA 15146

THE FOLLOWING CRITERION SHOULD BE FOLLOWED DURING ROUTINE INSPECTIONS:

1. ALL STORM STRUCTURES INCLUDING INLETS, MANHOLES, SUMPS, AND STORM SEWER PIPES WILL BE INSPECTED FOUR (4) TIMES PER YEAR AT THE CHANGE OF EACH SEASON AND AFTER EVERY MAJOR STORM EVENT (>1 INCH RAINFALL DEPTH). THESE INSPECTIONS WILL INVOLVE VIEWING ALL STRUCTURES FOR DEBRIS, A VISUAL INSPECTION OF ALL PIPES FOR DEPOSITION AND RUNNING A CAMERA THROUGH ANY PIPE THAT IS SUSPECT AND CANNOT BE VISUALLY INSPECTED. **MAINTENANCE, AS NEEDED, WILL BE COMPLETED WITHIN THIRTY (30) DAYS OF THE INSPECTION DATE.**
2. THE INSPECTION WILL CONSIST OF REMOVING ALL MANHOLE LIDS AND ACCESSING THE CONVEYANCE SYSTEMS. ALL STORM INLETS SHALL HAVE GRATES REMOVED AND INSPECTED AND CLEANED. PROPER SAFETY PROCEDURES, INCLUDING ALL APPLICABLE LOCAL, STATE AND FEDERAL REGULATIONS WILL BE FOLLOWED WHEN CLEANING AND INSPECTING THE CONVEYANCE SYSTEMS.
3. TRASH AND DEBRIS REMOVED FROM THE SITE SHOULD BE DEPOSITED ONLY AT SUITABLE DISPOSAL/RECYCLING SITES AND MUST COMPLY WITH APPLICABLE LOCAL, STATE, AND FEDERAL WASTE REGULATIONS.
4. A PHOTOGRAPHIC LOG WILL BE MAINTAINED SHOWING THE CONDITIONS OF THE DETENTION SYSTEMS AND ASSOCIATED INFRASTRUCTURE AT THE TIME OF INSPECTION. A MAINTENANCE LOG IS TO BE KEPT FOR ALL MAINTENANCE AND REPAIRS INCLUDING INSTALLATION OF THE STORMWATER FACILITIES.
5. THE TOWNSHIP WILL HAVE THE RIGHT TO ENTER ONTO THE PREMISES FOR THE PURPOSE OF INSPECTION OF THE STORMWATER DETENTION FACILITIES. IF THE OWNER IS NOTIFIED OF MAINTENANCE REQUIREMENTS BY THE TOWNSHIP AND FAILS TO PERFORM SAID MAINTENANCE, THE TOWNSHIP MAY PERFORM THE NECESSARY MAINTENANCE WORK OR CORRECTIVE WORK AND THE OWNER SHALL REIMBURSE THE TOWNSHIP FOR ALL COSTS.

RE-VEGETATION:

ALL UNDISTURBED OPEN SPACE, NATURAL DRAINAGE WAYS, AND WOODED AREAS WILL BE INSPECTED DURING THE ANNUAL INSPECTION TO INSURE THAT THE VEGETATION IS IN GOOD HEALTH. NEW TREES/SEEDING WILL BE PLANTED TO REPLACE TREES/SEEDING THAT ARE DEAD OR IN POOR HEALTH.
PER DEP'S PENNSYLVANIA STORMWATER BEST MANAGEMENT PRACTICES MANUAL, MEADOW MANAGEMENT INVOLVES A SEASONAL MOWING, ALTHOUGH CARE MUST BE TAKEN TO MAKE SURE THAT ANY MANAGEMENT IS COORDINATED WITH ESSENTIAL RESEEDING AND OTHER IMPORTANT ASPECTS OF MEADOW REESTABLISHMENT.

1. IN THE FIRST YEAR WEEDS MUST BE CAREFULLY CONTROLLED AND CONSISTENTLY MOWED BACK TO 4–6 INCHES TALL WHEN THEY REACH 12 INCHES IN HEIGHT.
2. IN THE SECOND YEAR, WEEDS SHOULD CONTINUE TO BE MONITORED AND MOWED AND RHIZOMATOUS WEEDS SHOULD BE HAND TREATED WITH HERBICIDE. WEEDS SHOULD NOT BE SPRAYED WITH HERBICIDE AS THE DRIFT FROM THE SPRAY MAY KILL LARGE PATCHES OF DESIRABLE PLANTS, ALLOWING WEEDS TO MOVE IN TO THESE NEW OPEN AREAS.
3. IN THE BEGINNING OF THE THIRD SEASON, THE YOUNG MEADOW SHOULD BE BURNED OFF IN MID–SPRING. IF BURNING IS NOT POSSIBLE, THE MEADOW SHOULD BE MOWED VERY CLOSELY TO THE GROUND INSTEAD. THE MOWED MATERIAL SHOULD BE REMOVED FROM THE SITE TO EXPOSE THE SOIL TO THE SUN. THIS HELPS TO ENCOURAGE RAPID SOIL WARMING WHICH FAVORS THE ESTABLISHMENT OF "WARM SEASON" PLANTS OVER "COOL SEASON" WEEDS.

INFILTRATION TRENCH

AN INFILTRATION TRENCH IS A "LEAKY" PIPE IN A STONE FILLED TRENCH WITH A LEVEL BOTTOM. THE STORMWATER BEING TREATED BY THESE TRENCHES IS USUALLY FROM DOWNSPOUTS FROM BUILDINGS. THE TRENCHES PROVIDE WATER QUALITY TREATMENT, GROUNDWATER RECHARGE, AND UNDERGROUND TEMPORARY STORAGE.
MAINTENANCE FOR AN INFILTRATION TRENCH SHOULD FOCUS ON THE SEDIMENT TRAPPING BEFORE THE STORMWATER REACHES THE TRENCH. IF THE TRENCH BECOMES CLOGGED WITH SEDIMENTS, THEN THE POTENTIAL FOR FAILURE IS VERY HIGH.

SPECIAL MAINTENANCE CONSIDERATIONS:

1. CATCH BASINS AND INLETS SHOULD BE INSPECTED AND CLEANED **AT LEAST 2 TIMES PER YEAR.**
2. THE VEGETATION ALONG THE SURFACE OF THE INFILTRATION TRENCH SHOULD BE MAINTAINED IN GOOD CONDITION, AND ANY BARE SPOTS REVEGETATED AS SOON AS POSSIBLE.
3. VEHICLES SHOULD NOT BE PARKED OR DRIVEN ON A VEGETATED INFILTRATION TRENCH, AND CARE SHOULD BE TAKEN TO AVOID EXCESSIVE COMPACTION BY MOWERS
4. INSPECT THE TRENCH FOR SEDIMENT BUILD–UP AND STRUCTURAL DAMAGE
   - REMOVE DEBRIS FROM OVERFLOW STRUCTURE
5. CHECK THE SURROUNDING AREA FOR EROSION AND ADEQUATE MULCH COVER

PERVIOUS PAVEMENT

PERVIOUS PAVEMENT ALLOWS STORMWATER TO PERCOLATE THROUGH THE SURFACE AND ARE UNDERLAIN BY A UNIFORMLY–GRADED STONE BED, WHICH PROVIDES TEMPORARY STORAGE FOR PEAK RATE CONTROL AND PROMOTES INFILTRATION. PERVIOUS PAVEMENT MAY CONSIST OF PERVIOUS ASPHALT, PERVIOUS CONCRETE, OR PERVIOUS PAVEMENT UNITS.
IF A PERVIOUS PAVEMENT SYSTEM IS NOT PERIODICALLY CLEANED, OVER TIME, THE VOID STRUCTURE SYSTEM WILL BECOME CLOGGED WITH DEBRIS AND SEDIMENT. TO KEEP THE SYSTEM CLEAN THROUGHOUT ITS LIFESPAN, **THE PAVEMENT SURFACE SHOULD BE VACUUMED BIANNUALLY** WITH A COMMERCIAL CLEANING UNIT. PAVEMENT WASHING SYSTEMS OR COMPRESSED AIR UNITS ARE NOT RECOMMENDED. **ALL INLET STRUCTURES WITHIN OR DRAINING TO THE INFILTRATION BEDS SHOULD BE CLEANED BIANNUALLY.**
PLANTED AREAS ADJACENT TO THE PERVIOUS PAVEMENT SHOULD BE WELL MAINTAINED TO PREVENT SOIL WASHOUT ONTO THE PAVEMENT. IF ANY WASHOUT DOES OCCUR, IT SHOULD BE CLEANED OFF THE PAVEMENT IMMEDIATELY TO PREVENT FURTHER CLOGGING OF THE PORES. FURTHERMORE, IF ANY BARE SPOTS OR ERODED AREAS ARE OBSERVED WITHIN THE PLANTED AREAS, THEY SHOULD BE REPLANTED AND/OR STABILIZED AT ONCE. **PLANTED AREAS SHOULD BE INSPECTED ON A SEMIANNUAL BASIS.** ALL TRASH AND OTHER LITTER THAT IS OBSERVED DURING THESE INSPECTIONS SHOULD BE REMOVED.

SPECIAL MAINTENANCE CONSIDERATIONS:
PREVENT CLOGGING OF PAVEMENT SURFACE WITH SEDIMENT

- VACUUM PAVEMENT 2–3 TIMES PER YEAR
- MAINTAIN PLANTED AREAS ADJACENT TO PAVEMENT
- IMMEDIATELY CLEAN ANY SOIL DEPOSITED ON PAVEMENT
- CLEAN INLETS DRAINING TO THE SUBSURFACE BED TWICE PER YEAR
- DO NOT STORE SOIL/MULCH ON THE UNPROTECTED PAVEMENT SURFACE

WINTER MAINTENANCE
WINTER MAINTENANCE FOR A PERVIOUS PARKING LOT MAY BE NECESSARY BUT IS USUALLY LESS INTENSIVE THAN THAT REQUIRED FOR A STANDARD IMPERVIOUS SURFACE. ICE AND LIGHT SNOW ACCUMULATION ARE NOT AS PROBLEMATIC AS FOR STANDARD IMPERVIOUS SURFACES, AS THE UNDERLYING STONE BED TENDS TO ABSORB AND RETAIN HEAT SO THAT FREEZING RAIN AND SNOW MELT FAR FASTER. HOWEVER, SNOW WILL ACCUMULATE DURING HEAVIER STORMS. IN SUCH INSTANCES, THE FOLLOWING RECOMMENDATIONS SHOULD BE FOLLOWED:

1. AVOID USING ABRASIVES SUCH AS SAND OR CINDERS ON OR ADJACENT TO THE PERVIOUS PAVEMENT (THEY WILL CLOG THE SYSTEM)
2. SNOW PLOWING IS FINE, PROVIDED IT IS DONE CAREFULLY
   - USE A RUBBER CUTTING EDGE
   - SET THE BLADE SLIGHTLY HIGHER THAN USUAL, ABOUT AN INCH
3. SALT IS AN ACCEPTABLE DEICER FOR USE ON THE PERVIOUS PAVEMENT, THOUGH NONTOXIC, ORGANIC DEICERS, APPLIED EITHER AS BLENDED, MAGNESIUM–BASED LIQUID PRODUCTS, OR AS PRETREATED SALT, ARE PREFERABLE
4. WITHIN THE 1ST YEAR OF INSTALLATION, NO SALT SHOULD BE USED ON THE PERVIOUS PAVEMENT

REPAIRS
SOME SETTLING MAY OCCUR, WHICH MAY CAUSE THE PERVIOUS PAVEMENT SYSTEM TO CRACK. REPAIRS WILL VARY BASED ON THE TYPE OF SYSTEM USED, BUT THE FOLLOWING GENERAL PROCEDURES MAY BE USED:
PERVIOUS ASPHALT OR CONCRETE

- CRACKS AND POTHOLES SHOULD BE PATCHED WITH A PERVIOUS MIX
- FOR AREAS GREATER THAN 50 SQUARE FEET, APPROVAL OF PATCH TYPE SHOULD BE SOUGHT FROM EITHER THE ENGINEER OR OWNER

PAVER UNITS

- REPAIR OR REPLACE SECTION TO THE NEAREST JOINT

UNDER NO CIRCUMSTANCES SHOULD THE PAVEMENT SURFACE EVER BE SEAL COATED.

WATER QUALITY FILTERS & HYDRODYNAMIC DEVICES

WATER QUALITY FILTERS AT THIS SITE INCLUDE FLEXSTORM PURE PERMANENT INLET FILTERS WITH STAINLESS STEEL FRAMING AND SNOUTS. SUPPLEMENTAL MANUFACTURER'S INFORMATION FOR THESE BMP'S IS INCLUDED IN THE PCSM NARRATIVE.

REGULAR MAINTENANCE IS IMPERATIVE TO REMOVE THE SEDIMENT FROM THE WATER QUALITY INLET AND ANY FLOATING DEBRIS AND PRODUCTS FOR THE CONTINUITY OF THE EFFECTIVENESS OF THE STRUCTURE.

WATER QUALITY INLETS WILL BE INSPECTED THREE TO FOUR TIMES ANNUALLY, DEPENDING ON THEIR PERFORMANCE.

WATER QUALITY INLETS WILL BE INSPECTED AFTER EACH MAJOR RUNOFF EVENT.

OWNER WILL CREATE A LOG OF SEDIMENT AMOUNT AND DATE REMOVED IN ORDER TO PLAN AN ANNUAL MAINTENANCE SCHEDULE.

WATER QUALITY INLETS WILL BE INSPECTED WEEKLY DURING CONSTRUCTION. POST–CONSTRUCTION, THEY WILL BE EMPTIED PER THE MANUFACTURER'S GUIDELINES, BUT NOT LESS THAN TWICE A YEAR.
WATER QUALITY INLETS WITH SNOUTS ARE TO BE EMPTIED WHEN ACCUMULATION OF SEDIMENT AND DEBRIS IS WITHIN 6–INCHES OF THE BOTTOM OF THE HOOD.

WATER QUALITY STRUCTURES WITH FLEXSTORM FILTERS ARE TO BE CLEANED IF MORE THAN HALF FILLED WITH SEDIMENT AND DEBRIS. PER ADVANCED DRAINAGE SYSTEMS, INC. "POST CONSTRUCTION INSPECTIONS SHOULD OCCUR THREE TIMES PER YEAR (EVERY FOUR MONTHS) IN AREAS WITH MILD YEAR ROUND RAINFALL AND FOUR TIMES PER YEAR (EVERY THREE MONTHS FEBRUARY THROUGH NOVEMBER) IN AREAS WITH SUMMER RAINS BEFORE AND AFTER THE WINTER SNOWFALL SEASON".

DISPOSAL OF REMOVED MATERIAL WILL DEPEND ON THE NATURE OF THE DRAINAGE AREA AND THE INTENT AND FUNCTION OF THE WATER QUALITY INLET. MATERIAL REMOVED FROM WATER QUALITY INLETS THAT SERVE "HOT SPOTS" SUCH AS FUELING STATIONS OR THOSE THAT RECEIVE A LARGE AMOUNT OF DEBRIS SHOULD BE HANDLED ACCORDING TO DEP REGULATIONS FOR THAT TYPE OF SOLID WASTE. SUCH AS A LANDFILL THAT IS APPROVED BY DEP TO ACCEPT SOLID WASTE. WATER QUALITY INLETS THAT PRIMARILY CATCH SEDIMENT AND DETRITUS FROM AREAS SUCH AS LAWNS MAY REUSE THE WASTE ON SITE.

VACTOR TRUCKS SHALL BE CONSIDERED FOR USE AS A CLEANING MECHANISM.

SALT AND SAND ARE SIGNIFICANTLY INCREASED IN THE WINTER, AND MAY WARRANT MORE FREQUENT MAINTENANCE.

REFERENCES ARE ACKNOWLEDGED FROM:
PA STORMWATER BEST MANAGEMENT PRACTICES MANUAL
BEST MANAGEMENT PRODUCTS, INC.

DRY EXTENDED DETENTION BASIN:

THE STORMWATER MANAGEMENT DRY EXTENDED DETENTION BASIN WILL BE INSPECTED DURING THE ANNUAL INSPECTION AND EACH TIME THE LAWN AREAS ARE MOWED. THIS INSPECTION WILL INCLUDE VIEWING THE OUTLET STRUCTURE TO INSURE THAT IT IS CLEAN AND FREE OF DEBRIS. THE SYSTEM WILL BE INSPECTED TO INSURE THAT IT IS CLEAN AND FREE OF DEBRIS. THE SYSTEM WILL BE INSPECTED TO INSURE THAT NO EROSION IS OCCURRING AND ALL DEBRIS, INCLUDING PAPER, LEAVES, TWIGS, OR ANY OTHER MATERIAL WHICH COULD CAUSE A BLOCKAGE OF THE CONTROL ORIFICES, WILL BE REMOVED AND DISPOSED OF IN APPROVED TRASH CONTAINERS. THE DETENTION BASIN WILL BE PLANTED WITH PERMANENT VEGETATIVE COVER. SLOPES FLATTER THAN 3:1 SHALL BE MOWED TO A MAXIMUM HEIGHT OF FIVE INCHES. MOWING WILL BE PERFORMED THROUGHOUT THE GROWING SEASON TO MAINTAIN ALL LAWN AREAS WITH A NEW UNIFORMED APPEARANCE.

STORMTECH MC–3500 UNDERGROUND DETENTION SYSTEM:

MAINTENANCE IS PER THE MANUFACTURER'S STANDARDS AND SPECIFICATIONS, PLEASE SEE SECTION 102.8(F)(6) OF THE PCSM NARRATIVE FOR ADDITIONAL INFORMATION.

STEP 1) INSPECT ISOLATOR ROW FOR SEDIMENT
- A. INSPECTION PORTS (IF PRESENT)
  - A.1. REMOVE/OPEN LID ON NYLOPLAST INLINE DRAIN
  - A.2. REMOVE AND CLEAN FLEXSTORM FILTER IF INSTALLED
  - A.3. USING A FLASHLIGHT AND STADIA ROD, MEASURE DEPTH OF SEDIMENT AND RECORD ON MAINTENANCE LOG.
  - A.4. LOWER A CAMERA INTO ISOLATOR ROW FOR VISUAL INSPECTION OF SEDIMENT LEVELS (OPTIONAL)
  - A.5. IF SEDIMENT IS AT, OR ABOVE, 3" (80 mm) PROCEED TO STEP 2. IF NOT, PROCEED TO STEP 3.
- B. ALL ISOLATOR ROWS
  - B.1. REMOVE COVER FROM STRUCTURE AT UPSTREAM END OF ISOLATOR ROW
  - B.2. USING A FLASHLIGHT, INSPECT DOWN THE ISOLATOR ROW THROUGH OUTLET PIPE
    - I) MIRRORS ON POLES OR CAMERAS MAY BE USED TO AVOID A CONFINED SPACE ENTRY
    - II) FOLLOW OSHA REGULATIONS FOR CONFINED SPACE ENTRY IF ENTERING MANHOLE
  - B.3. IF SEDIMENT IS AT, OR ABOVE, 3" (80 mm) PROCEED TO STEP 2. IF NOT, PROCEED TO STEP 3.

STEP 2) CLEAN OUT ISOLATOR ROW USING THE JETVAC PROCESS
- A. A FIXED CULVERT CLEANING NOZZLE WITH REAR FACING SPREAD OF 45° (1.1 m) OR MORE IS PREFERRED
- B. APPLY MULTIPLE PASSES OF JETVAC UNTIL BACKFLUSH WATER IS CLEAN
- C. VACUUM STRUCTURE SUMP AS REQUIRED

STEP 3) REPLACE ALL COVERS, GRATES, FILTERS, AND LIDS; RECORD OBSERVATIONS AND ACTIONS.
STEP 4) INSPECT AND CLEAN BASINS AND MANHOLES UPSTREAM OF THE STORMTECH SYSTEM.

ADDITIONAL NOTES:
1. INSPECT EVERY 6 MONTHS DURING THE FIRST YEAR OF OPERATION. ADJUST THE INSPECTION INTERVAL BASED ON PREVIOUS OBSERVATIONS OF SEDIMENT ACCUMULATION AND HIGH WATER ELEVATIONS.
2. CONDUCT JETTING AND VACTORING ANNUALLY OR WHEN INSPECTION SHOWS THAT MAINTENANCE IS NECESSARY.

RECYCLING OR DISPOSAL OF MATERIALS:

OFF–SITE SPOIL AREAS FOR THIS PROJECT ARE TO BE DETERMINED BY THE CONTRACTOR. THE SPOIL AREAS MUST BE APPROVED SITES OR MUST OBTAIN APPROVAL PRIOR TO EARTHWORK OPERATIONS.

CONSTRUCTION WASTES INCLUDE, BUT ARE NOT LIMITED TO EXCESS SOIL MATERIALS, BUILDING MATERIALS, CONCRETE WASH WATER, SANITARY WASTES, ETC. THAT COULD ADVERSELY IMPACT WATER QUALITY. DIRECTIONS FOR DISPOSING OF CONSTRUCTION WASTE MATERIALS HAVE BEEN PROVIDED ON THE PLAN. WHERE POSSIBLE, EXCESS CONSTRUCTION MATERIALS SHALL BE RECYCLED.

SOIL OR ROCK DISPOSAL AREAS LOCATED OUTSIDE OF THE PROJECT LIMITS WILL BE APPROVED SITES OR MUST OBTAIN APPROVAL PRIOR TO EARTHWORK OPERATIONS.

ALL BUILDING MATERIALS AND WASTES MUST BE REMOVED FROM THE SITE AND RECYCLED OR DISPOSED OF IN ACCORDANCE WITH THE DEPARTMENT'S SOLID WASTE MANAGEMENT REGULATIONS AT 25 PA. CODE CHAPTER 260, §§260.1 ET SEQ., 271.1, AND 287.1 ET. SEQ. NO BUILDING MATERIALS OR WASTES OR UNUSED BUILDING MATERIALS WILL BE BURNED, BURIED, DUMPED, OR DISCHARGED AT THE SITE.

ALL OFF–SITE WASTE AND BORROW AREAS MUST HAVE AN E&S PLAN APPROVED BY THE COUNTY CONSERVATION DISTRICT OR DEP FULLY IMPLEMENTED PRIOR TO BEING ACTIVATED. THE CONTRACTOR WILL BE RESPONSIBLE FOR THE REMOVAL OF ANY EXCESS MATERIAL AND TO DEVELOP A PLAN THAT MEETS THE CONDITIONS OF CHAPTER 102, NPDES PERMIT CONDITIONS, AND/OR OTHER STATE AND FEDERAL REGULATIONS.

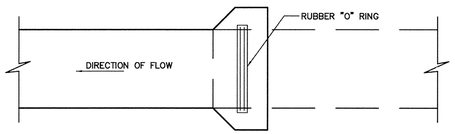

3 C–11 **REINFORCED CONCRETE PIPE**
NO SCALE — EXTENDED DETENTION BASIN

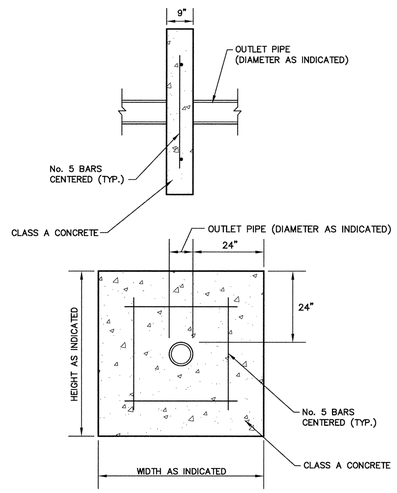

4 C–11 **CONCRETE ANTI–SEEP COLLAR**
NO SCALE

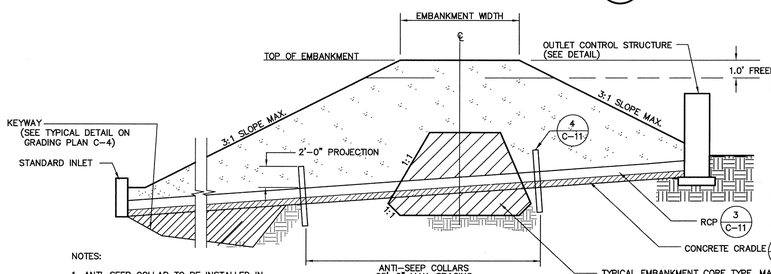

NOTES:
1. ANTI–SEEP COLLAR TO BE INSTALLED IN ACCORDANCE WITH PENN DOT R.C. 70. INSTALL GASKET BETWEEN BAND AND PIPE CORRUGATION.
2. KEYWAY AND FILL PLACEMENT OPERATION TO BE FIELD MONITORED BY A GEOTECHNICAL ENGINEER.
3. KEYWAY LIMITS TO BE DETERMINED BY SOIL TYPE AND FIELD CONDITIONS.

EMBANKMENT CONSTRUCTION:
1. ALL FILL SHALL BE FREE OF TRASH, RUBBLE, DEBRIS, ROOTS, ORGANIC, FROZEN OR OTHER FOREIGN MATERIAL. FILL SHALL NOT BE PLACED ON SUBGRADE THAT IS ORGANIC, UNDERWATER, MUDDY, FROZEN, CONTAINS FROST OR OBJECTIONABLE MATERIAL.
2. FILL SHALL BE PLACED IN MAXIMUM 8" LIFTS AND COMPACTED TO AT LEAST 95% OF THE MAXIMUM DRY DENSITY AS DETERMINED BY THE MODIFIED PROCTOR MOISTURE–DENSITY TEST (ASTM D 1557).
3. REFER TO THE SITE EARTHWORK SPECIFICATIONS FOR ADDITIONAL INFORMATION.
4. STABILIZE EMBANKMENT IMMEDIATELY WITH SEEDING AND EROSION BLANKET AS SPECIFIED.

1 C–11 **TYPICAL BASIN EMBANKMENT**
NO SCALE

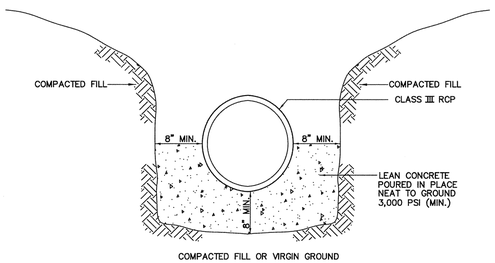

2 C–11 **CONCRETE CRADLE DETAIL**
NO SCALE — EXTENDED DETENTION BASIN

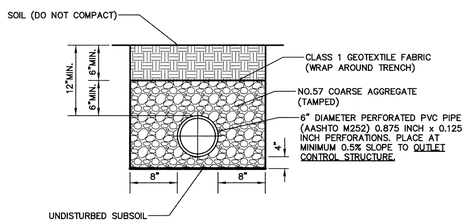

NOTES:
1. PROTECT INFILTRATION AREA FROM COMPACTION DURING INSTALLATION.
2. DO NOT COMPACT SUBGRADE.
3. GEOTEXTILE SHALL MEET REQUIREMENTS OF PENN DOT SPECIFICATIONS, PUBLICATION 408, SECTION 735.
4. REFERENCE PENN DOT RC–30.
5. KEEP AREA CLEAN OF ALL SEDIMENT DURING CONSTRUCTION.

5 C–11 **BASIN UNDERDRAIN**
NO SCALE

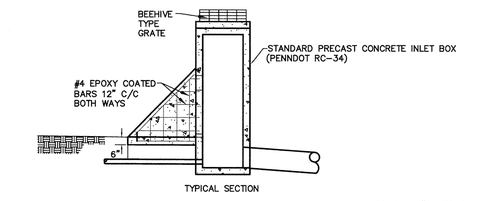

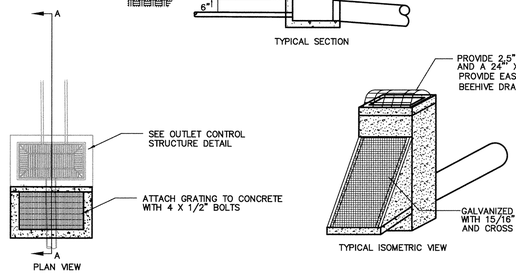

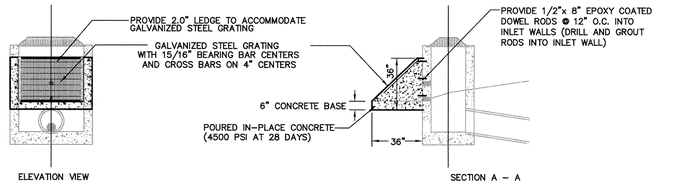

6 C–11 **TYPICAL TRASH GRILLE DETAIL**
NO SCALE

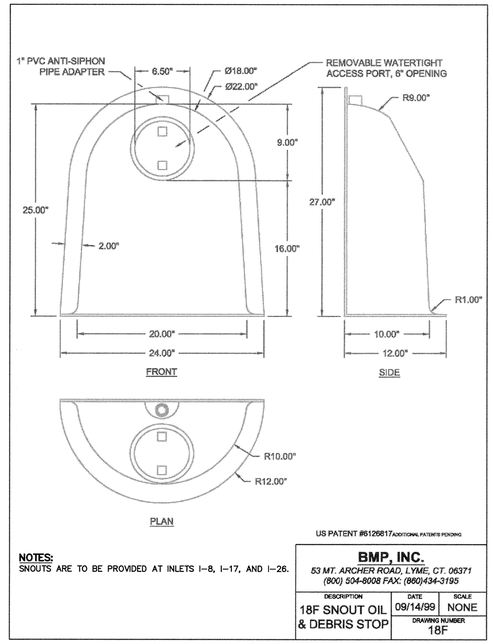

PLAN BOOK	PAGE
365	57

NOTES:
SNOUTS ARE TO BE PROVIDED AT INLETS I–8, I–17, AND I–26.

US PATENT #6126817 ADDITIONAL PATENTS PENDING

BMP, INC.
53 MT. ARCHER ROAD, LYME, CT. 06371
(800) 504–6008 FAX: (860)434–3195

DESCRIPTION	DATE	SCALE
18F SNOUT OIL & DEBRIS STOP	09/14/99	NONE
	DRAWING NUMBER 18F	

7 C–11 **18F SNOUT OIL & DEBRIS STOP DETAIL**
NO SCALE — BMP, INC. DETAIL

COMMONWEALTH OF PENNSYLVANIA — REGISTERED PROFESSIONAL ENGINEER — MEGAN HEDEEN SHERINGER — No. PE057467

REVISIONS
SEPTEMBER 7, 2016
DECEMBER 9, 2016

JOB NO. 4891
DWG FILE – 4891 SITE DETAILS.DWG

#1 COCHRAN AUTOMOTIVE
4520 WILLIAM PENN HIGHWAY — MONROEVILLE, PA, 15146

PCSM DETAILS AND NOTES

#1 COCHRAN SUBARU DEALERSHIP

TOWNSHIP OF CONNOQUENESSING — BUTLER COUNTY, PA.

FAHRINGER, McCARTY, GREY, INC.
LANDSCAPE ARCHITECTS AND ENGINEERS — MONROEVILLE, PA.

SCALE	AS NOTED
DATE	AUGUST 3, 2016
DRAWN BY	RGG/MHS
SHEET NUMBER	C–11

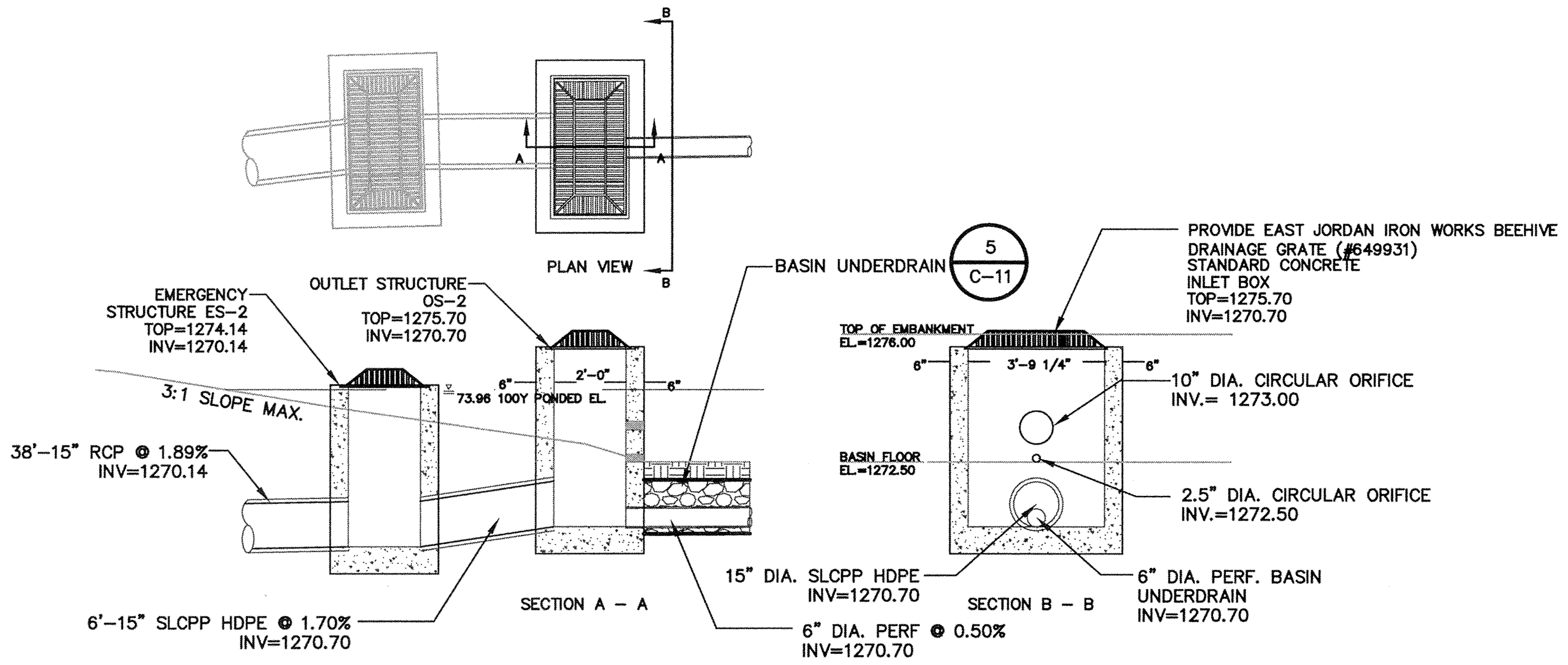

1/C-12 DETENTION BASIN OUTLET CONTROL STRUCTURE OS-2
NO SCALE

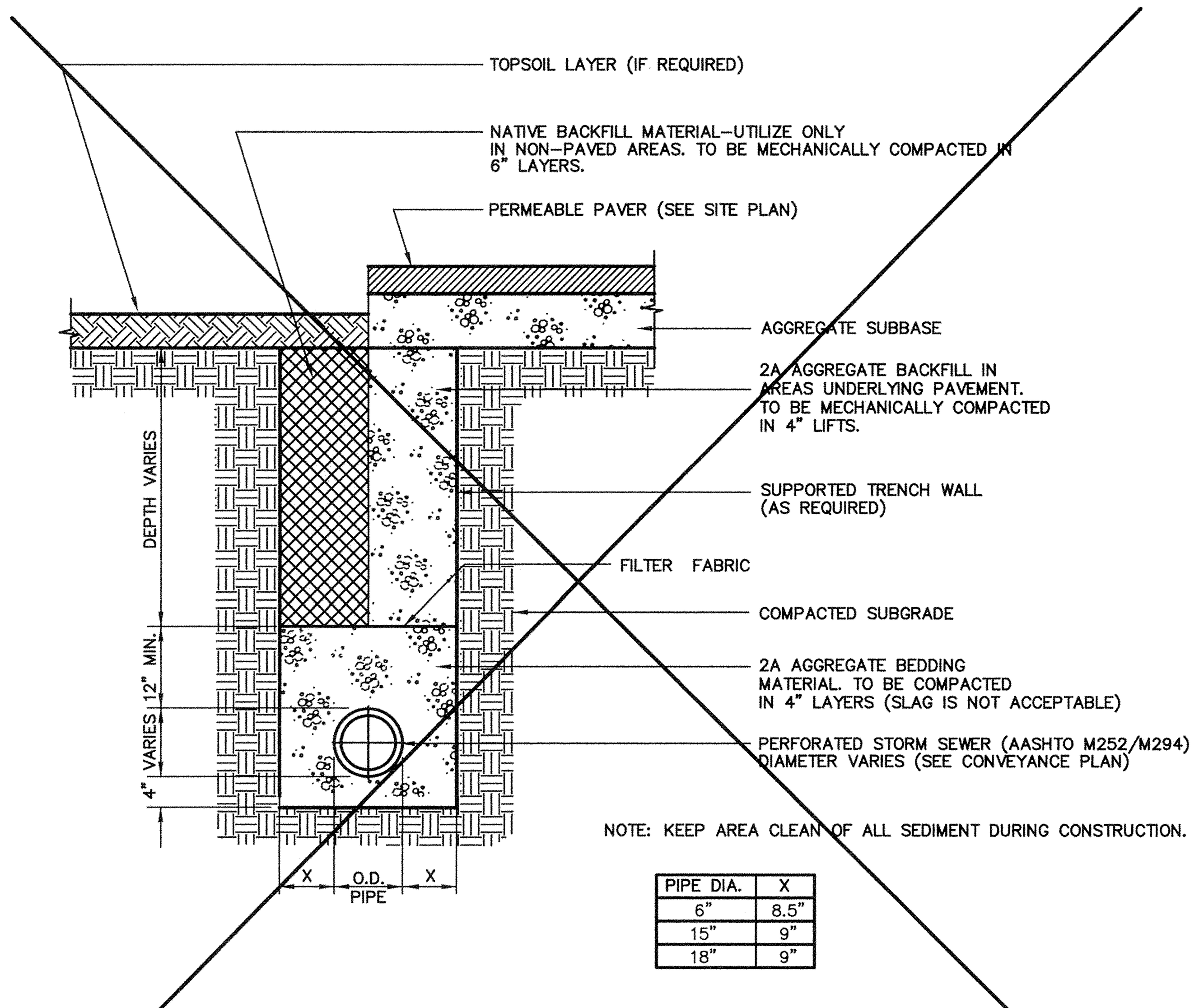

NOTE: KEEP AREA CLEAN OF ALL SEDIMENT DURING CONSTRUCTION.

PIPE DIA.	X
6"	8.5"
15"	9"
18"	9"

2/C-12 INFILTRATION TRENCH BACKFILL DETAIL
NO SCALE

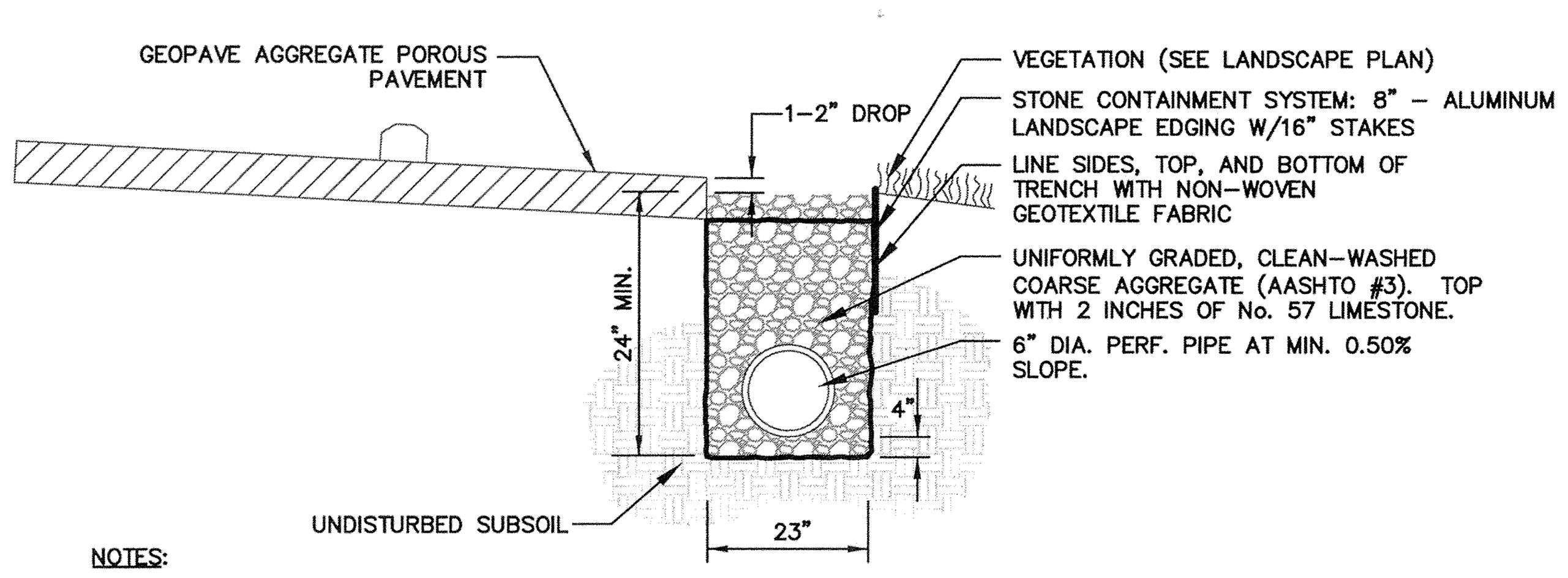

NOTES:

1. PROTECT INFILTRATION AREA FROM COMPACTION DURING INSTALLATION.
2. DO NOT COMPACT SUBGRADE.
3. GEOTEXTILE SHALL MEET REQUIREMENTS OF PENN DOT SPECIFICATIONS, PUBLICATION 408, SECTION 735.
4. KEEP AREA CLEAN OF ALL SEDIMENT DURING CONSTRUCTION.

3/C-12 GRAVEL FILLED TRENCH DETAIL
NO SCALE

CONSTRUCTION SEQUENCE:

1. STAKEOUT THE FOLLOWING ITEMS (ALL TEMPORARY SEDIMENT AND EROSION CONTROL BMP'S ARE TO BE INSTALLED AS PER THE PENNSYLVANIA EROSION AND SEDIMENT POLLUTION CONTROL PROGRAM MANUAL):
   A. ROCK CONSTRUCTION ENTRANCE RCE-1
   B. REINFORCED FILTER FENCE/COMPOST SOCKS.
   C. LIMIT OF CLEARING LINE.
   D. TOPSOIL STOCKPILE
   E. SEDIMENT TRAP
   F. STAGING AREA
2. INSTALL TEMPORARY 15" HDPE PIPE FROM EXISTING INLET AT PROPOSED ENTRANCE TO INLET I-4 AS NOTED ON THE E&S PLAN. INSTALL SILT SACK IN EXISTING INLET AT ENTRANCE. INSTALL SILT SACK IN INLET I-4. ONCE PIPE IS EXTENDED TO I-4, INSTALL ROCK CONSTRUCTION ENTRANCE (RCE-1). SEE PLAN FOR LOCATION. NO EQUIPMENT SHALL BE PERMITTED TO LEAVE THE SITE WITHOUT BEING THOROUGHLY CLEANED OF ALL EXCESSIVE MUD AND DEBRIS.
   A. GRADE ENTRANCE AS PER THE GRADING PLAN.
   B. INSTALL GEOTEXTILE BLANKET (AS DETAILED)
   C. INSTALL AASHTO NO. 1 STONE (AS DETAILED)
   D. INSTALL BROAD BASED DIP AND ROCK LINED CHANNEL.
3. INSTALL ALL COMPOST FILTER SOCKS AS DETAILED. (CFS-1 TO 7). SEE PLAN FOR LOCATIONS. INSTALL SAFETY FENCE AROUND EXISTING WETLAND.
4. INSTALL STAGING AREA AND MOBILIZE EQUIPMENT AND TRAILERS.
   A. CLEARING AND GRUBBING.
   B. STRIP TOPSOIL AND HAUL TO TOPSOIL STOCKPILE. INSTALL RSF-1 AT TOPSOIL STOCKPILE.
   C. GRADE STAGING AREA AS PER GRADING PLAN. STOCKPILE CUT MATERIAL NEAR TOPSOIL STOCKPILE FOR FILL AREAS. EXTEND RSF-1 AS NECESSARY.
   D. INSTALL GEOTEXTILE BLANKET.
   E. INSTALL GRAVEL BASE (MIN. 4").
5. INSTALL PROPOSED SEDIMENT TRAP. (ALL OF THE FOLLOWING ITEMS MUST BE COMPLETED FOR THE TRAP TO FUNCTION PROPERLY):
   A. CLEAR AND GRUB AREA OF SEDIMENT TRAP.
   B. STRIP TOPSOIL FROM THE AREA OF THE SEDIMENT TRAP AND HAUL TO TOPSOIL STOCKPILE.
   C. COMPLETE EARTHWORK ON TRAP. WHEN EARTHWORK IS COMPLETE INSTALL EROSION CONTROL BLANKET AS SHOWN ON THE PLAN.
   D. INSTALL OUTFALL PIPE AND EMERGENCY STRUCTURE ES-2; CONNECT TO INLET I-4.
   E. INSTALL TEMPORARY RISER PIPE WITH TRASH RACK AND ANTI-VORTEX DEVICE (SEE DETAIL). INSTALL CLEAN OUT STAKE.
   F. SEED SEDIMENT TRAP WITH PERMANENT SEEDING MIXTURE.

   NOTE: THE CONTRACTOR SHALL NOTIFY THE LICENSED PROFESSIONAL AT LEAST THREE (3) WORKING DAYS IN ADVANCE IN ORDER TO OBSERVE AND INSPECT THE INSTALLATION OF THE RCP OUTLET PIPE AND CRADLE AND THE CONSTRUCTION OF THE EARTH EMBANKMENT (FUTURE DETENTION BASIN).
6. ONCE ALL SPECIFIED EROSION CONTROL FACILITIES ARE IN PLACE, FUNCTIONING AND APPROVED BY THE CONSERVATION DISTRICT, BEGIN CLEARING AND GRUBBING THE REMAINING SITE FOR EARTHWORK.
7. STRIP AND STOCKPILE TOPSOIL TO DEPTHS INDICATED FROM CONSTRUCTION AREA. TOPSOIL SHALL BE STOCKPILED AT LOCATION SHOWN. MAXIMUM SIDE SLOPES SHALL BE 2:1. MAXIMUM HEIGHTS MUST NOT EXCEED 25 FEET. SEED TOPSOIL STOCKPILE WITH TEMPORARY SEED MIX AS SPECIFIED. INSTALL RSF-1 ALONG DOWNSLOPE PERIMETER OF STOCKPILE.
8. BEGIN EARTHWORK AT THE CONTRACTOR'S DISCRETION. THE CONTRACTOR SHALL PERFORM THE FOLLOWING ITEMS DURING EARTHWORK OPERATIONS:
   A. PROOF ROLL GRADED AREAS AT THE END OF EACH WORK DAY.
   B. MAINTAIN DAILY AND REBUILD CHANNELS AS NEEDED THROUGHOUT THE EARTHWORK OPERATIONS.
   C. WHEN EARTHWORK NEEDS TO BE COMPLETED AROUND AND ON THE STAGING AREA, REMOVE AND RELOCATE IT (IF NECESSARY).
   D. ALL EXCESS CUT IS TO BE PLACED IN THE FILL AREAS.
   E. ALL SLOPES 3:1 OR GREATER BROUGHT TO FINAL GRADE SHALL BE SEEDED WITH THE CONSERVATION SLOPE SEEDING MIXTURE AND/OR COVERED WITH FLEXIBLE GROWTH MEDIUM AS SHOWN ON THE PLAN WITHIN FOUR (4) DAYS.
   F. CESSATION OF EARTH DISTURBANCE ACTIVITY FOR AT LEAST 4 DAYS REQUIRES TEMPORARY STABILIZATION (SEE TEMPORARY SEEDING SPECIFICATIONS).
   G. ONCE SITE GRADING IS COMPLETE, INSTALL CONSTRUCTION FENCE AROUND ALL PERVIOUS PAVER AREAS (PROTECT FROM ANY DISTURBANCE).
9. ANY TIME WATER MUST BE PUMPED FROM THE WORK AREA, IT MUST BE TREATED FOR SEDIMENT REMOVAL PRIOR TO DISCHARGING TO THE EXISTING STORM SEWER SYSTEM. REFER TO PUMPED WATER FILTER BAG DETAIL FOR INSTALLATION. SEE PLAN FOR SUGGESTED LOCATIONS. IF PUMPED WATER FILTER BAG CANNOT BE LOCATED IN GRASSY AREAS, FOLLOW NOTES 3 & 4 IN THE STANDARD DETAIL.
10. AS GRADING PROGRESSES ON SITE, REMOVE EXISTING 18" RCP WITHIN RT. 68 R.O.W. AND INSTALL 24" RCP AS NOTED. REMOVE EXISTING INLET AND REPLACE WITH MANHOLE. INSTALL INLETS I-2 AND I-3. CONNECT TO INLET I-4. INSTALL SILT SACK IN EACH INLET AS EACH PIPE SEDIMENT IS COMPLETED. REPLACE STONE FOR ROCK CONSTRUCTION ENTRANCE AFTER PIPE CONNECTION TO I-4. (THIS WILL REROUTE PIPING FROM SEDIMENT TRAP).
11. INSTALL STORMTECH SYSTEM AS DETAILED. INCLUDING MANHOLES S-1 AND 2. INSTALL OUTLET STRUCTURE OS-1 AND EMERGENCY STRUCTURE AS DETAILED. INSTALL SILT SACK IN OUTLET STRUCTURE OS-1 INSTALL INLETS I-6,7,8,9 AND ROUTE TO DETENTION SYSTEM. INSTALL SILT SACK IN EACH INLET AS EACH PIPE SEGMENT IS COMPLETED. INSTALL INLETS I-5,15,16,17,18 AND CONNECT TO THE STORMTECH SYSTEM. INSTALL SILT SACK IN EACH INLET AS EACH PIPE SEGMENT IS COMPLETED. KEEP TRENCH AGGREGATE CLEAN OF ALL SEDIMENT. NOTE: INSTALL 12" DIA. COMPOST SOCK (CFS-8) AROUND PERIMETER OF EXCAVATION FOR THE STORMTECH SYSTEM TO PREVENT SEDIMENT FROM ENTERING THE EXCAVATION. CAP END OF STORM PIPE FROM OS-1 UNTIL FINAL CONNECTION IS MADE (TO KEEP SEDIMENT OUT OF THE STORM SEWER SYSTEM). THE STORMTECH EXCAVATION/INSTALLATION SHOULD BE DONE DURING DRY WEATHER.

    NOTE: THE CONTRACTOR SHALL NOTIFY THE LICENSED PROFESSIONAL AT LEAST THREE (3) WORKING DAYS IN ADVANCE IN ORDER TO OBSERVE AND INSPECT THE INSTALLATION OF THE DETENTION SYSTEM AND INFILTRATION TRENCHES.
12. BEGIN CONSTRUCTION OF THE SUBARU DEALERSHIP CONCURRENT WITH REMAINING GRADING.
13. INSTALL CONCRETE WASHOUT FACILITY AS DETAILED FOR CONCRETE WORK.
14. AS GRADING PROGRESSES, INSTALL INLETS I-10,11,12,13,14,19,20,21,22,23,24,25,26,27,28 AND UNDERDRAIN SYSTEM. INSTALL SILT SACK IN EACH INLET AS EACH PIPE SEGMENT IS COMPLETED. KEEP TRENCH AGGREGATE CLEAN OF ALL SEDIMENT.
15. WHEN STORM DRAINAGE SYSTEM IS COMPLETE, INSTALL SANITARY SEWER. INSTALL SANITARY TREATMENT SYSTEM, MANHOLES 1,2,3 AND OIL SEPARATOR.
16. INSTALL REMAINING UTILITIES (WATER, GAS, ELECTRIC AND COMMUNICATIONS) TO THE SUBARU DEALERSHIP.
17. INSTALL ROOF DRAINS FOR FUTURE BUILDING CONNECTION.
18. ONCE ALL UTILITY INSTALLATION IS COMPLETE, BEGIN FINAL GRADING IN AREAS OUTSIDE THE BUILDING FOOTPRINT. AS SOON AS SLOPES, AND OTHER DISTURBED AREAS REACH FINAL GRADE, THEY MUST BE STABILIZED AS NOTED ON THE PLAN DRAWINGS.
19. AS DISTURBED AREAS WITHIN THE PROJECT APPROACH FINAL GRADE, THE CONTRACTOR SHALL MAKE PREPARATIONS FOR SEEDING AND MULCHING OF THESE AREAS. IN NO CASE SHOULD AN AREA EXCEEDING 15,000 S.F., WHICH IS TO BE STABILIZED BY VEGETATION, REACH FINAL GRADE WITHOUT BEING SEEDED OR MULCHED. WAITING UNTIL EARTHMOVING IS COMPLETED BEFORE MAKING PREPARATIONS FOR SEEDING AND MULCHING IS NOT ACCEPTABLE (E&S POLLUTION CONTROL PROGRAM MANUAL, MARCH 2012)
20. ESTABLISH A GRAVEL SUBBASE (AS REQUIRED) AND INSTALL THE NEW ASPHALT AND CURBS FOR THE PARKING AREAS AND VEHICLE STORAGE AREAS.
21. INSTALL SIDEWALKS, DISPLAY AREAS AND SITE LIGHTING.
22. INSTALL PERVIOUS PAVERS/AGGREGATE POROUS PAVEMENT AS DETAILED AT LOCATIONS SHOWN. KEEP AREA CLEAN OF ALL SEDIMENT. INSTALL CFS-9,10,11,12,13,15 UPSLOPE OF PERVIOUS PAVEMENT AREAS PRIOR TO STONE INSTALLATION.
    NOTE: THE CONTRACTOR SHALL NOTIFY THE LICENSED PROFESSIONAL AT LEAST THREE (3) WORKING DAYS IN ADVANCE IN ORDER TO OBSERVE AND INSPECT THE INSTALLATION OF THE PERVIOUS PAVERS AND AGGREGATE POROUS PAVEMENT.
23. INSTALL ROCK TRENCH AS DETAILED, INCLUDING 6" PERFORATED PIPE, FLARED END SECTION AND INLET BOX. KEEP AREA CLEAN OF ALL SEDIMENT. INSTALL CFS-14 UPSLOPE OF TRENCH PRIOR TO TRENCH EXCAVATION. INSTALL TRENCH DURING DRY WEATHER.
    NOTE: THE CONTRACTOR SHALL NOTIFY THE LICENSED PROFESSIONAL AT LEAST THREE (3) WORKING DAYS IN ADVANCE IN ORDER TO OBSERVE AND INSPECT THE INSTALLATION OF THE ROCK TRENCH.
24. INSTALL ALL LANDSCAPING; (USE TOPSOIL FROM STOCKPILE ONSITE).
25. CONVERT SEDIMENT TRAP INTO STORMWATER DETENTION BASIN.
    A. INSTALL THE SEDIMENT TRAP DEWATERING FACILITY AND DEWATER TRAP.
    B. DEMUCK TRAP. HAUL MUCK TO AREA NEXT TO TOPSOIL STOCKPILE AND ALLOW TO DRY.
    C. REMOVE TEMPORARY RISER PIPE AND INSTALL THE PERMANENT OUTLET STRUCTURE OS-2. REMOVE THE CLEANOUT STAKE.
    D. INSTALL BASIN UNDERDRAINS AS DETAILED.
    E. SEED DISTURBED TRAP AREAS WITH PERMANENT SEEDING MIXTURE AND RAIN GARDEN MIX. APPLY SEED TO ALL AREAS THAT DO NOT HAVE SEEDING ESTABLISHED TO THE REQUIRED UNIFORM 70% PERENNIAL VEGETATIVE COVER.
    F. SEE STORMWATER MANAGEMENT PLANS AND DETAIL SHEETS FOR PROPER INSTALLATION OF THE STORMWATER BASIN AND PERMANENT STORMWATER TREATMENT FACILITIES.

    NOTE: THE CONTRACTOR SHALL NOTIFY THE LICENCED PROFESSIONAL AT LEAST THREE (3) WORKING DAYS IN ADVANCE IN ORDER TO OBSERVE AND INSPECT THE CONVERSION OF THE SEDIMENT TRAP TO THE PERMANENT DETENTION BASIN (AS PER ITEMS A TO F ABOVE).

STATEMENT OF CONDITIONS:
PRIOR TO CONVERTING THE SEDIMENT TRAP INTO THE DETENTION BASIN THE FOLLOWING ITEMS SHALL BE STABILIZED.

1. THE ENTIRE DISTURBED AREA OF THE SITE CONTRIBUTING RUNOFF TO THE TRAP SHALL BE STABILIZED TO THE REQUIRED UNIFORM 70% PERENNIAL VEGETATION COVER OR HAVE ALTERNATE BMPS IN PLACE.
2. THE SLOPES WITHIN THE SEDIMENT TRAP LOCATED ABOVE THE CLEANOUT ELEVATION OF THE TRAP AND THE CONTRIBUTING AREA SHALL HAVE VEGETATION ESTABLISHED TO THE REQUIRED UNIFORM 70% PERENNIAL VEGETATIVE COVER.
3. THE OUTSIDE SLOPES SHALL HAVE VEGETATION ESTABLISHED TO THE REQUIRED UNIFORM 70% PERENNIAL VEGETATIVE COVER.
UNTIL THESE CONDITIONS ARE MET THE CONTRACTOR SHALL NOT PROCEED WITH THE SEDIMENT BASIN CONVERSION.

26. ONCE PERMANENT VEGETATION HAS BEEN ESTABLISHED AT A UNIFORM 70% (MINIMUM) PERENNIAL VEGETATIVE COVER OVER THE ENTIRE SITE, AND ALL PAVING IS COMPLETE, ALL REMAINING EROSION CONTROL MEASURES SHALL BE REMOVED. ALL AREAS DISTURBED BY THE REMOVAL OF THESE FACILITIES SHALL BE SEEDED WITH THE PERMANENT SEED MIXTURE. AT INLETS I-2,5,6,7,12,13,14,15,16,18,19,20,21,22,23,24,25,28 AND OUTLET STRUCTURE OS-1, REPLACE SILT SACKS WITH PERMANENT FLEXSTORM PURE INLET FILTERS. REMOVE SILT SACKS FROM INLETS I-8,17 AND 26. APPROPRIATELY REMOVE ANY SEDIMENT IN SUMPS AND INSTALL SNOUTS IN INLETS I-8,17 AND 26.
27. INSTALL ALL SITE SIGNAGE AND COMPLETE PAVEMENT STRIPPING.
28. SITE CLEAN-UP. CHECK AND CLEANOUT UNDERGROUND DETENTION SYSTEM IF NECESSARY.

△3 REVISE CONSTRUCTION SEQUENCE (#4).

FLEXSTORM PURE FILTERS FOR PERMANENT INLET PROTECTION
PRODUCT SELECTION AND SPECIFICATION DRAWING

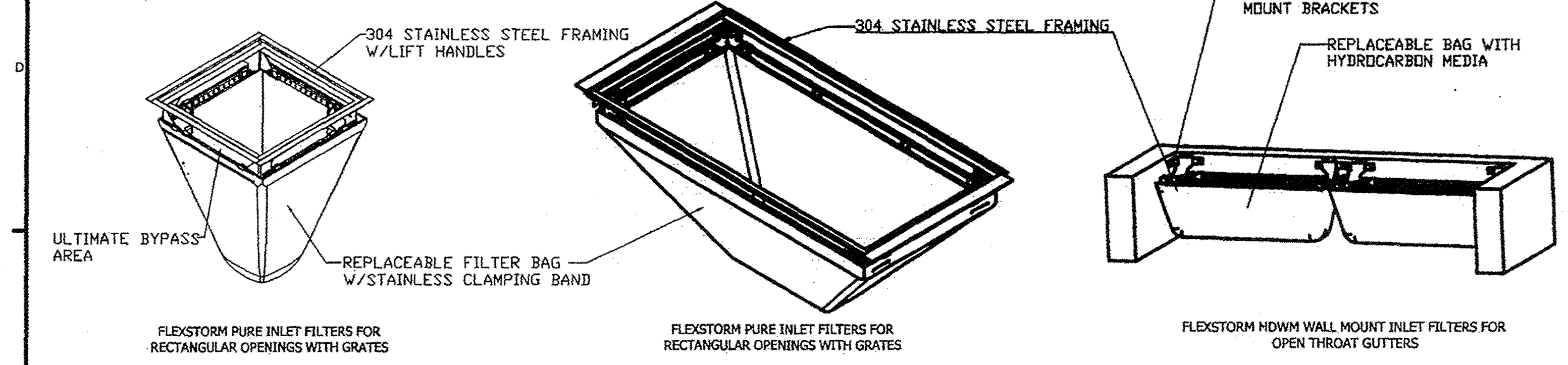

Product selection for FLEXSTORM PURE Filters (Permanent Inlet Protection)

Descrip	Inlet Type	Grate Size	Opening Size	Bag Cap (ft^3)	Flow Ratings (CFS) FX/FX+	PC/PC+	Bypass	FX	FX+	PC	PC+
2' x 2' Frame and Grate	Square/Rect (SQ)	24 x 24	22 x 22	3.3	1.8	1.6	4.8	62MHD22FX	62MHD22FXP	62MHD22PC	62MHD22PCP
2' x 4' Penndot Type M & C	Square/Rect (SQ)	26.5 x 48	24 x 44.5	6.3	3.1	2.2	9.5	62PENNMHDFX	62PENNMHDFXP	62PENNMHDPC	62PENNMHDPCP
2' x 6' Frame and Grate	Concrete Box (HD4)	26.5 x 75	24 x 72	10.0	4.8	4.1	13.0	62PENNHD2x6FX	62PENNHD2x6FXP	62PENNHD2x6PC	62PENNHF2x6PCP
3 x 3 Frame and Grate	Square/Rect (SQ)	37.5 x 37.5	36 x 36	7.2	4.4	3.2	9.6	62HDXLFX	62HDXLFXP	62HDXLPC	62HDXLPCP
48" Open Throat Curb Inlet	Wall Mount (WM)	N/A	48	3.3	2.5	4.2	N/A*	62HDWM48FX	62HDWM48FXP	62HDWM48PC	62HDWM48PCP

NOTES:
FLEXSTORM PURE FILTERS ARE TO BE PROVIDED AT INLETS I-2, 5, 6, 7, 12, 13, 14, 15, 16, 18, 19, 20, 21, 22, 23, 24, 25, AND OUTLET STRUCTURE OS-1.

*FLOW RATINGS SHOWN ARE 50% MAXIMUM

NOTES:

1. ALL FRAMING IS CONSTRUCTED OF 304 STAINLESS STEEL FOR 25 YEAR SERVICE LIFE RATING
2. TOTAL BYPASS CAPACITY WILL VARY WITH EACH SIZED DRAINAGE STRUCTURE. FLEXSTORM DESIGNS FRAMING BYPASS TO MEET OR EXCEED THE DESIGN FLOW OF THE PARTICULAR DRAINAGE STRUCTURE.
3. UPON ORDERING ADS P/N CONFIRMATION OF THE DOT CALLOUT, FLEXSTORM ITEM CODE, CASTING MAKE AND MODEL, OR DETAILED DIMENSIONAL FORMS MUST BE PROVIDED.
4. FOR WRITTEN SPECIFICATIONS AND MAINTENANCE GUIDELINES VISIT WWW.INLETFILTERS.COM

INSTALLATION:

1. REMOVE GRATE
2. DROP FLEXSTORM INLET FILTER ONTO LOAD BEARING LIP OF CASTING OR CONCRETE STRUCTURE
3. REPLACE GRATE

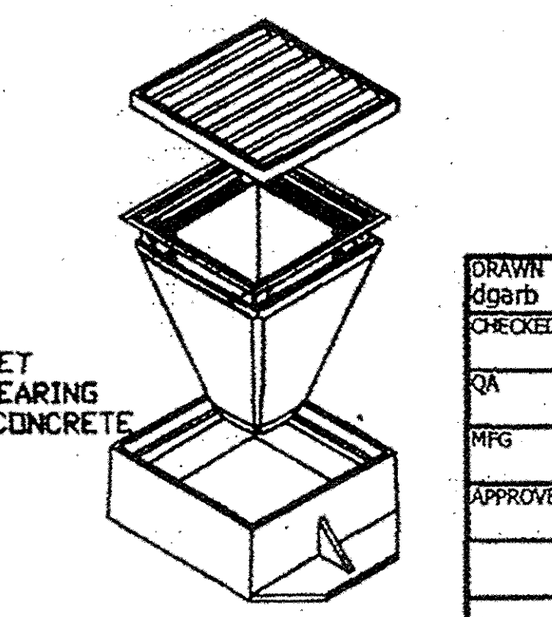

DRAWN dgarb 1/12/2016 · CHECKED · QA · MFG · APPROVED · TITLE · SIZE C · DWG NO Penndot pure for submittal · REV · SCALE · SHEET 1 OF 1

4/C-12 FLEXSTORM PURE INLET FILTER
NO SCALE — ADS DETAIL

FLARED END SECTIONS

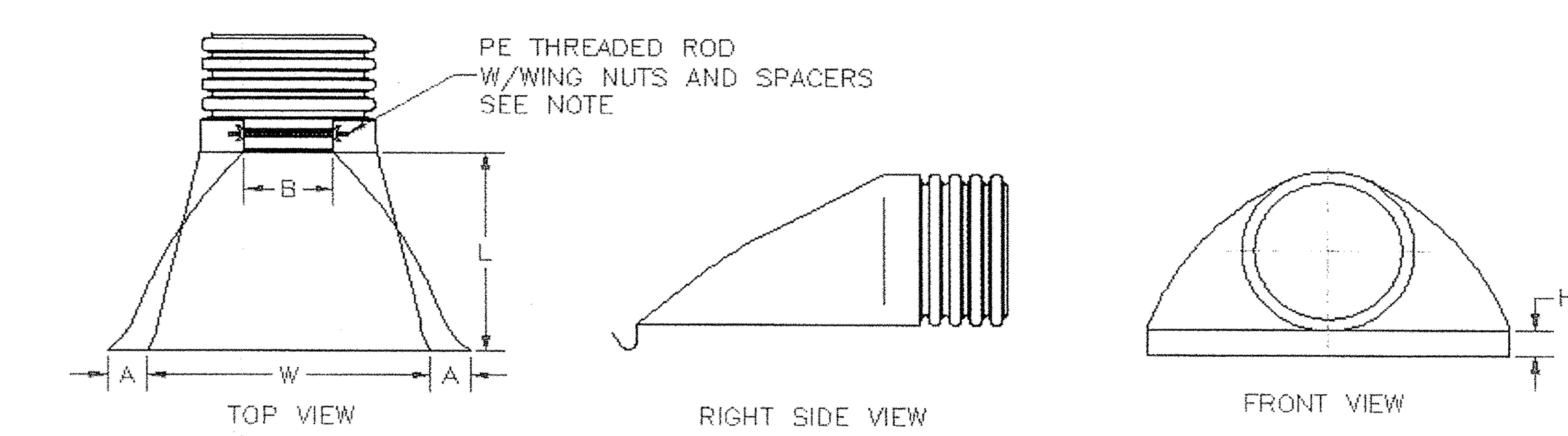

PART #	PIPE SIZE	A	B(MAX)	H	L	W
1210NP	12 in (300 mm)	6.5 in (165 mm)	10.0 in (254 mm)	6.5 in (165 mm)	25.0 in (635 mm)	29.0 in (737 mm)
1510NP	15 in (375 mm)	6.5 in (165 mm)	10.0 in (254 mm)	6.5 in (165 mm)	25.0 in (635 mm)	29.0 in (737 mm)
1810NP	18 in (450 mm)	7.5 in (191 mm)	15.0 in (381 mm)	6.5 in (165 mm)	32.0 in (813 mm)	35.0 in (889 mm)
2410NP	24 in (600 mm)	7.5 in (191 mm)	18.0 in (457 mm)	6.5 in (165 mm)	36.0 in (914 mm)	45.0 in (1143 mm)
3015NP	30 in (750 mm)	7.5 in (191 mm)	12.0 in (305 mm)	8.6 in (218 mm)	58.0 in (1473 mm)	63.0 in (1600 mm)
3615NP	36 in (900 mm)	7.5 in (191 mm)	25.0 in (635 mm)	8.6 in (218 mm)	58.0 in (1473 mm)	63.0 in (1600 mm)

NOTE: ALL DIMENSIONS ARE NOMINAL

ADS ADVANCED DRAINAGE SYSTEMS, INC.

DRAWING #:	6070	
DRAWN BY:	JCB	01.17.07
APPROVED BY:	JCB	06.28.07
REVISIONS:	NJP	06.20.07

5/C-12 FLARED END SECTION
NO SCALE — ADS DETAIL

PLAN BOOK	PAGE
365	58

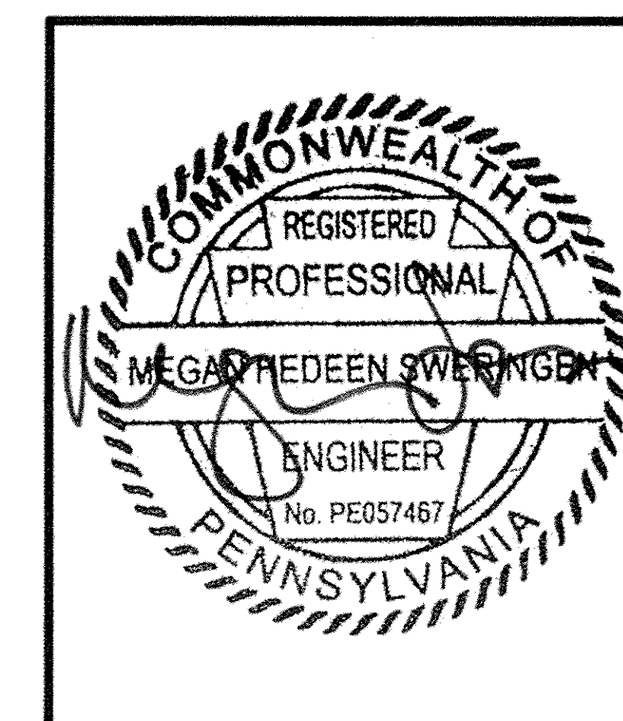

JOB NO. 4891
DWG FILE: 4891 SITE DETAILS.DWG

REVISIONS
SEPTEMBER 7, 2016
DECEMBER 9, 2016
3. FEB. 6, 2017

#1 COCHRAN AUTOMOTIVE
4520 WILLIAM PENN HIGHWAY — MONROEVILLE PA, 15146

PCSM DETAILS AND NOTES
#1 COCHRAN SUBARU DEALERSHIP
TOWNSHIP OF CONNOQUENESSING — BUTLER COUNTY, PA.

FAHRINGER, McCARTY, GREY, INC.
LANDSCAPE ARCHITECTS AND ENGINEERS — MONROEVILLE, PA.

SCALE: AS NOTED
DATE: AUGUST 3, 2016
DRAWN BY: RGG/MHS
SHEET NUMBER: C-12

PROJECT INFORMATION	
ENGINEERED PRODUCT MANAGER:	TRAVIS KNISS 814-915-0394 TRAVIS.KNISS@ADS-PIPE.COM
ADS SALES REP:	TOM FOGELSONGER 724-349-9295 TOM.FOGELSONGER@ADS-PIPE.COM
PROJECT NO:	151357

ADVANCED DRAINAGE SYSTEMS, INC.

CONNOQUENESSING SWM

CONNOQUENESSING, PA

STORMWATER CHAMBER SPECIFICATIONS

1. CHAMBERS SHALL BE STORMTECH MC-3500 OR APPROVED EQUAL.
2. CHAMBERS SHALL BE MADE FROM VIRGIN, IMPACT-MODIFIED POLYPROPYLENE COPOLYMERS.
3. CHAMBER ROWS SHALL PROVIDE CONTINUOUS, UNOBSTRUCTED INTERNAL SPACE WITH NO INTERNAL SUPPORT PANELS THAT WOULD IMPEDE FLOW OR LIMIT ACCESS FOR INSPECTION.
4. THE STRUCTURAL DESIGN OF THE CHAMBERS, THE STRUCTURAL BACKFILL, AND THE INSTALLATION REQUIREMENTS SHALL ENSURE THAT THE LOAD FACTORS SPECIFIED IN THE AASHTO LRFD BRIDGE DESIGN SPECIFICATIONS, SECTION 12.12, ARE MET FOR: 1) LONG-DURATION DEAD LOADS AND 2) SHORT-DURATION LIVE LOADS, BASED ON THE AASHTO DESIGN TRUCK WITH CONSIDERATION FOR IMPACT AND MULTIPLE VEHICLE PRESENCES.
5. CHAMBERS SHALL MEET THE REQUIREMENTS OF ASTM F2418, "STANDARD SPECIFICATION FOR POLYPROPYLENE (PP) CORRUGATED WALL STORMWATER COLLECTION CHAMBERS".
6. CHAMBERS SHALL BE DESIGNED AND ALLOWABLE LOADS DETERMINED IN ACCORDANCE WITH ASTM F2787, "STANDARD PRACTICE FOR STRUCTURAL DESIGN OF THERMOPLASTIC CORRUGATED WALL STORMWATER COLLECTION CHAMBERS".
7. ONLY CHAMBERS THAT ARE APPROVED BY THE SITE DESIGN ENGINEER WILL BE ALLOWED. THE CHAMBER MANUFACTURER SHALL SUBMIT THE FOLLOWING UPON REQUEST TO THE SITE DESIGN ENGINEER FOR APPROVAL BEFORE DELIVERING CHAMBERS TO THE PROJECT SITE:
   a. A STRUCTURAL EVALUATION SEALED BY A REGISTERED PROFESSIONAL ENGINEER THAT DEMONSTRATES THAT THE SAFETY FACTORS ARE GREATER THAN OR EQUAL TO 1.95 FOR DEAD LOAD AND 1.75 FOR LIVE LOAD, THE MINIMUM REQUIRED BY ASTM F2787 AND BY AASHTO FOR THERMOPLASTIC PIPE.
   b. A STRUCTURAL EVALUATION SEALED BY A REGISTERED PROFESSIONAL ENGINEER THAT DEMONSTRATES THAT THE LOAD FACTORS SPECIFIED IN THE AASHTO LRFD BRIDGE DESIGN SPECIFICATIONS, SECTION 12.12, ARE MET. THE 50 YEAR CREEP MODULUS DATA SPECIFIED IN ASTM F2418 MUST BE USED AS PART OF THE AASHTO STRUCTURAL EVALUATION TO VERIFY LONG-TERM PERFORMANCE.
   c. STRUCTURAL CROSS SECTION DETAIL ON WHICH THE STRUCTURAL EVALUATION IS BASED.
8. CHAMBERS AND END CAPS SHALL BE PRODUCED AT AN ISO 9001 CERTIFIED MANUFACTURING FACILITY.

IMPORTANT - NOTES FOR THE BIDDING AND INSTALLATION OF MC-3500 CHAMBER SYSTEM

1. STORMTECH MC-3500 CHAMBERS SHALL NOT BE INSTALLED UNTIL THE MANUFACTURER'S REPRESENTATIVE HAS COMPLETED A PRE-CONSTRUCTION MEETING WITH THE INSTALLERS.
2. STORMTECH MC-3500 CHAMBERS SHALL BE INSTALLED IN ACCORDANCE WITH THE "STORMTECH MC-3500/MC-4500 CONSTRUCTION GUIDE".
3. CHAMBERS ARE NOT TO BE BACKFILLED WITH A DOZER OR AN EXCAVATOR SITUATED OVER THE CHAMBERS. STORMTECH RECOMMENDS 3 BACKFILL METHODS:
   - STONESHOOTER LOCATED OFF THE CHAMBER BED.
   - BACKFILL AS ROWS ARE BUILT USING AN EXCAVATOR ON THE FOUNDATION STONE OR SUBGRADE.
   - BACKFILL FROM OUTSIDE THE EXCAVATION USING A LONG BOOM HOE OR EXCAVATOR.
4. THE FOUNDATION STONE SHALL BE LEVELED AND COMPACTED PRIOR TO PLACING CHAMBERS.
5. JOINTS BETWEEN CHAMBERS SHALL BE PROPERLY SEATED PRIOR TO PLACING STONE.
6. MAINTAIN MINIMUM - 9" (230 mm) SPACING BETWEEN THE CHAMBER ROWS.
7. INLET AND OUTLET MANIFOLDS MUST BE INSERTED A MINIMUM OF 12" (300 mm) INTO CHAMBER END CAPS.
8. EMBEDMENT STONE SURROUNDING CHAMBERS MUST BE A CLEAN, CRUSHED, ANGULAR STONE 3/4-2" (20-50 mm) MEETING THE AASHTO M43 DESIGNATION OF #3 OR #4.
9. STONE MUST BE PLACED ON THE TOP CENTER OF THE CHAMBER TO ANCHOR THE CHAMBERS IN PLACE AND PRESERVE ROW SPACING.
10. THE CONTRACTOR MUST REPORT ANY DISCREPANCIES WITH CHAMBER FOUNDATION MATERIALS BEARING CAPACITIES TO THE SITE DESIGN ENGINEER.
11. ADS RECOMMENDS THE USE OF "FLEXSTORM CATCH IT" INSERTS DURING CONSTRUCTION FOR ALL INLETS TO PROTECT THE SUBSURFACE STORMWATER MANAGEMENT SYSTEM FROM CONSTRUCTION SITE RUNOFF.

NOTES FOR CONSTRUCTION EQUIPMENT

1. STORMTECH MC-3500 CHAMBERS SHALL BE INSTALLED IN ACCORDANCE WITH THE "STORMTECH MC-3500/MC-4500 CONSTRUCTION GUIDE".
2. THE USE OF EQUIPMENT OVER MC-3500 CHAMBERS IS LIMITED:
   - NO EQUIPMENT IS ALLOWED ON BARE CHAMBERS.
   - NO RUBBER TIRED LOADER, DUMP TRUCK, OR EXCAVATORS ARE ALLOWED UNTIL PROPER FILL DEPTHS ARE REACHED IN ACCORDANCE WITH THE "STORMTECH MC-3500/MC-4500 CONSTRUCTION GUIDE".
   - WEIGHT LIMITS FOR CONSTRUCTION EQUIPMENT CAN BE FOUND IN THE "STORMTECH MC-3500/MC-4500 CONSTRUCTION GUIDE".
3. FULL 36" (900 mm) OF STABILIZED COVER MATERIALS OVER THE CHAMBERS IS REQUIRED FOR DUMP TRUCK TRAVEL OR DUMPING.

USE OF A DOZER TO PUSH EMBEDMENT STONE BETWEEN THE ROWS OF CHAMBERS MAY CAUSE DAMAGE TO CHAMBERS AND IS NOT AN ACCEPTABLE BACKFILL METHOD. ANY CHAMBERS DAMAGED BY USING THE "DUMP AND PUSH" METHOD ARE NOT COVERED UNDER THE STORMTECH STANDARD WARRANTY.

CONTACT STORMTECH AT 1-888-892-2694 WITH ANY QUESTIONS ON INSTALLATION REQUIREMENTS OR WEIGHT LIMITS FOR CONSTRUCTION EQUIPMENT.

©2013 ADS, INC.

PLAN BOOK	PAGE
365	59

JOB NO. 4891
DWG FILE - 4891-SITE DETAILS.DWG

REVISIONS
SEPTEMBER 7, 2016

#1 COCHRAN AUTOMOTIVE
4520 WILLIAM PENN HIGHWAY MONROEVILLE PA, 15146

PCSM DETAILS AND NOTES

#1 COCHRAN SUBARU DEALERSHIP

TOWNSHIP OF CONNOQUENESSING BUTLER COUNTY, PA.

FAHRINGER, McCARTY, GREY, INC.
LANDSCAPE ARCHITECTS AND ENGINEERS MONROEVILLE, PA.

SCALE: AS NOTED
DATE: AUGUST 3, 2016
DRAWN BY: RGG/MHS
SHEET NUMBER: C-13a

PROPOSED LAYOUT

(105) STORMTECH MC-3500 CHAMBERS
(22) STORMTECH MC-3500 END CAPS
INSTALLED WITH 12" COVER STONE, 9" BASE STONE, 40% STONE VOID
INSTALLED SYSTEM VOLUME: 21,767 CF (PERIMETER STONE INCLUDED)
AREA OF SYSTEM: 6,656 FT²
PERIMETER OF SYSTEM: 284 FT

PROPOSED ELEVATIONS

MAXIMUM ALLOWABLE GRADE (TOP OF PAVEMENT/UNPAVED):	1281.00
MINIMUM ALLOWABLE GRADE (UNPAVED WITH TRAFFIC):	1275.50
MINIMUM ALLOWABLE GRADE (UNPAVED NO TRAFFIC):	1275.00
MINIMUM ALLOWABLE GRADE (BASE OF FLEXIBLE PAVEMENT):	1275.00
MINIMUM ALLOWABLE GRADE (TOP OF RIGID CONCRETE PAVEMENT):	1275.00
TOP OF STONE:	1274.00
TOP OF CHAMBER:	1273.00
18" TOP MANIFOLD INVERT:	1270.92
18" BOTTOM CONNECTION INVERT:	1269.40
BOTTOM OF CHAMBER:	1269.25
UNDERDRAIN INVERT:	1268.50
BOTTOM OF STONE:	1268.50

NOTES

- MANIFOLD SIZE TO BE DETERMINED BY SITE DESIGN ENGINEER. SEE TECH SHEET #7 FOR MANIFOLD SIZING GUIDANCE.
- DUE TO THE ADAPTATION OF THIS CHAMBER SYSTEM TO SPECIFIC SITE AND DESIGN CONSTRAINTS, IT MAY BE NECESSARY TO CUT AND COUPLE ADDITIONAL PIPE TO STANDARD MANIFOLD COMPONENTS IN THE FIELD.

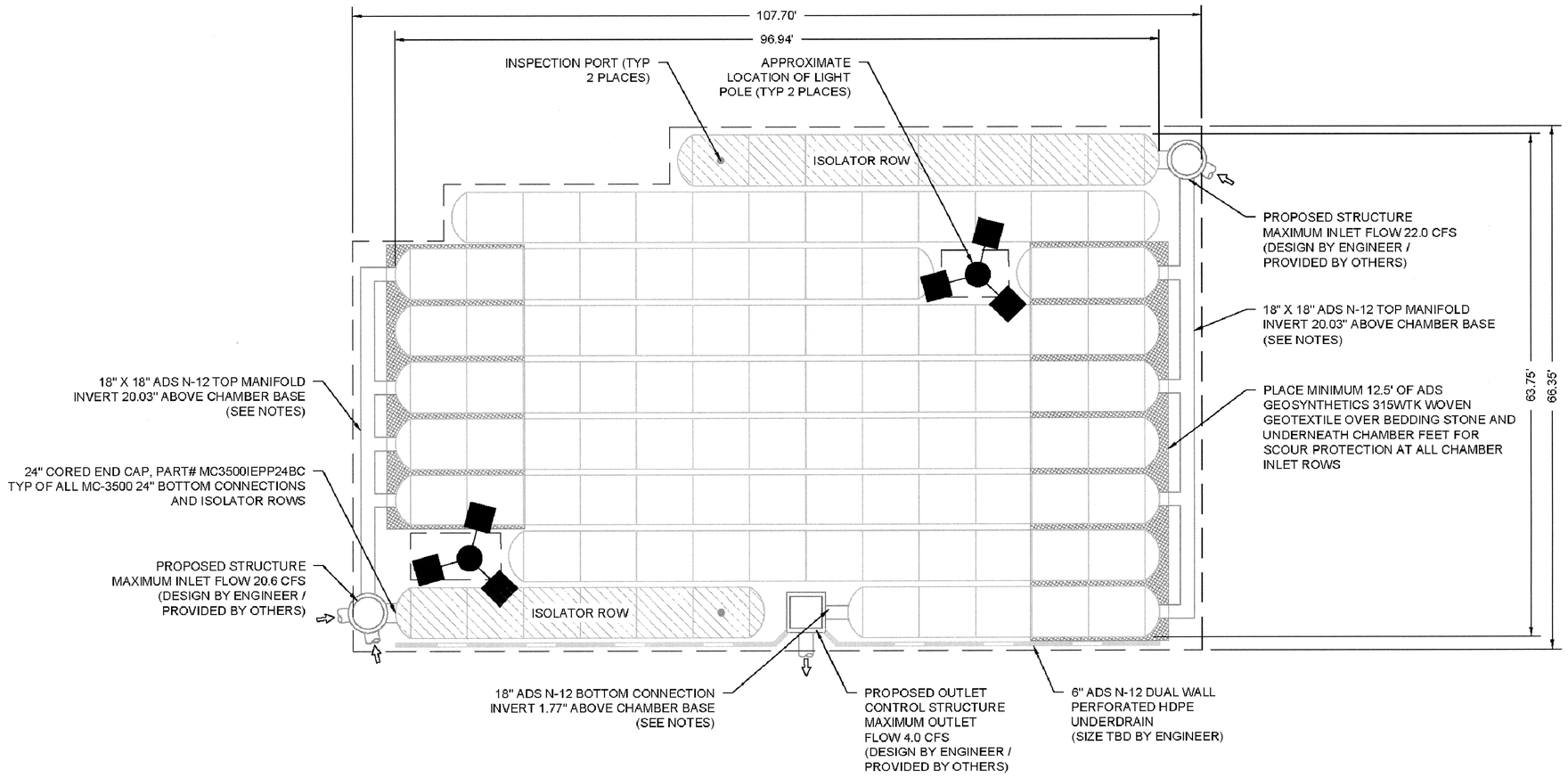

CONNOQUENESSING SWM
CONNOQUENESSING, PA

DATE: 7-19-16 | DRAWN: BEH | PROJECT #: 151357 | CHECKED: GFI

REV	DRW	CHK	DESCRIPTION
7-20-16	BEH	GFI	MC-3500 OPTION.
8-3-16	SMAC	KMS	REVISED PER ENGINEER

StormTech
Detention • Retention • Water Quality
70 INWOOD ROAD, SUITE 3 | ROCKY HILL | CT | 06067
860-529-8188 | 888-892-2694 | WWW.STORMTECH.COM

ADS
ADVANCED DRAINAGE SYSTEMS, INC.
4640 TRUEMAN BLVD
HILLIARD, OH 43026
1-800-733-7473

30'
15'
0

THIS DRAWING HAS BEEN PREPARED BASED ON INFORMATION PROVIDED TO ADS UNDER THE DIRECTION OF THE SITE DESIGN ENGINEER. THE SITE DESIGN ENGINEER SHALL REVIEW THIS DRAWING PRIOR TO CONSTRUCTION. IT IS THE ULTIMATE RESPONSIBILITY OF THE SITE DESIGN ENGINEER TO ENSURE THAT THE PRODUCT(S) DEPICTED AND ALL ASSOCIATED DETAILS MEET ALL APPLICABLE LAWS, REGULATIONS, AND PROJECT REQUIREMENTS

SHEET
2 OF 5

PLAN BOOK	PAGE
365	60

JOB NO. 4891
DWG FILE: 4891-SITE DETAILS.DWG

REVISIONS
SEPTEMBER 7, 2016

#1 COCHRAN AUTOMOTIVE
4520 WILLIAM PENN HIGHWAY MONROEVILLE PA, 15146

PCSM DETAILS AND NOTES
#1 COCHRAN SUBARU DEALERSHIP
TOWNSHIP OF CONNOQUENESSING BUTLER COUNTY, PA.

FAHRINGER, McCARTY, GREY, INC.
LANDSCAPE ARCHITECTS AND ENGINEERS MONROEVILLE, PA.

SCALE: AS NOTED
DATE: AUGUST 3, 2016
DRAWN BY: RGG/MHS
SHEET NUMBER: C-13b

ACCEPTABLE FILL MATERIALS: STORMTECH MC-3500 CHAMBER SYSTEMS

MATERIAL LOCATION		DESCRIPTION	AASHTO MATERIAL CLASSIFICATIONS	COMPACTION / DENSITY REQUIREMENT
D	**FINAL FILL:** FILL MATERIAL FOR LAYER 'D' STARTS FROM THE TOP OF THE 'C' LAYER TO THE BOTTOM OF FLEXIBLE PAVEMENT OR UNPAVED FINISHED GRADE ABOVE. NOTE THAT PAVEMENT SUBBASE MAY BE PART OF THE 'D' LAYER	ANY SOIL/ROCK MATERIALS, NATIVE SOILS, OR PER ENGINEER'S PLANS. CHECK PLANS FOR PAVEMENT SUBGRADE REQUIREMENTS.	N/A	PREPARE PER SITE DESIGN ENGINEER'S PLANS. PAVED INSTALLATIONS MAY HAVE STRINGENT MATERIAL AND PREPARATION REQUIREMENTS.
C	**INITIAL FILL:** FILL MATERIAL FOR LAYER 'C' STARTS FROM THE TOP OF THE EMBEDMENT STONE ('B' LAYER) TO 24" (600 mm) ABOVE THE TOP OF THE CHAMBER. NOTE THAT PAVEMENT SUBBASE MAY BE A PART OF THE 'C' LAYER.	GRANULAR WELL-GRADED SOIL/AGGREGATE MIXTURES, <35% FINES OR PROCESSED AGGREGATE. MOST PAVEMENT SUBBASE MATERIALS CAN BE USED IN LIEU OF THIS LAYER.	AASHTO M145[1] A-1, A-2-4, A-3 OR AASHTO M43[1] 3, 357, 4, 467, 5, 56, 57, 6, 67, 68, 7, 78, 8, 89, 9, 10	BEGIN COMPACTIONS AFTER 24" (600 mm) OF MATERIAL OVER THE CHAMBERS IS REACHED. COMPACT ADDITIONAL LAYERS IN 12" (300 mm) MAX LIFTS TO A MIN. 95% PROCTOR DENSITY FOR WELL GRADED MATERIAL AND 95% RELATIVE DENSITY FOR PROCESSED AGGREGATE MATERIALS.
B	**EMBEDMENT STONE:** FILL SURROUNDING THE CHAMBERS FROM THE FOUNDATION STONE ('A' LAYER) TO THE 'C' LAYER ABOVE.	CLEAN, CRUSHED, ANGULAR STONE	AASHTO M43[1] 3, 4	NO COMPACTION REQUIRED.
A	**FOUNDATION STONE:** FILL BELOW CHAMBERS FROM THE SUBGRADE UP TO THE FOOT (BOTTOM) OF THE CHAMBER.	CLEAN, CRUSHED, ANGULAR STONE	AASHTO M43[1] 3, 4	PLATE COMPACT OR ROLL TO ACHIEVE A FLAT SURFACE.[2 3]

PLEASE NOTE:
1. THE LISTED AASHTO DESIGNATIONS ARE FOR GRADATIONS ONLY. THE STONE MUST ALSO BE CLEAN, CRUSHED, ANGULAR. FOR EXAMPLE, A SPECIFICATION FOR #4 STONE WOULD STATE: "CLEAN, CRUSHED, ANGULAR NO. 4 (AASHTO M43) STONE".
2. STORMTECH COMPACTION REQUIREMENTS ARE MET FOR 'A' LOCATION MATERIALS WHEN PLACED AND COMPACTED IN 9" (230 mm) (MAX) LIFTS USING TWO FULL COVERAGES WITH A VIBRATORY COMPACTOR.
3. WHERE INFILTRATION SURFACES MAY BE COMPROMISED BY COMPACTION, FOR STANDARD DESIGN LOAD CONDITIONS, A FLAT SURFACE MAY BE ACHIEVED BY RAKING OR DRAGGING WITHOUT COMPACTION EQUIPMENT. FOR SPECIAL LOAD DESIGNS, CONTACT STORMTECH FOR COMPACTION REQUIREMENTS.

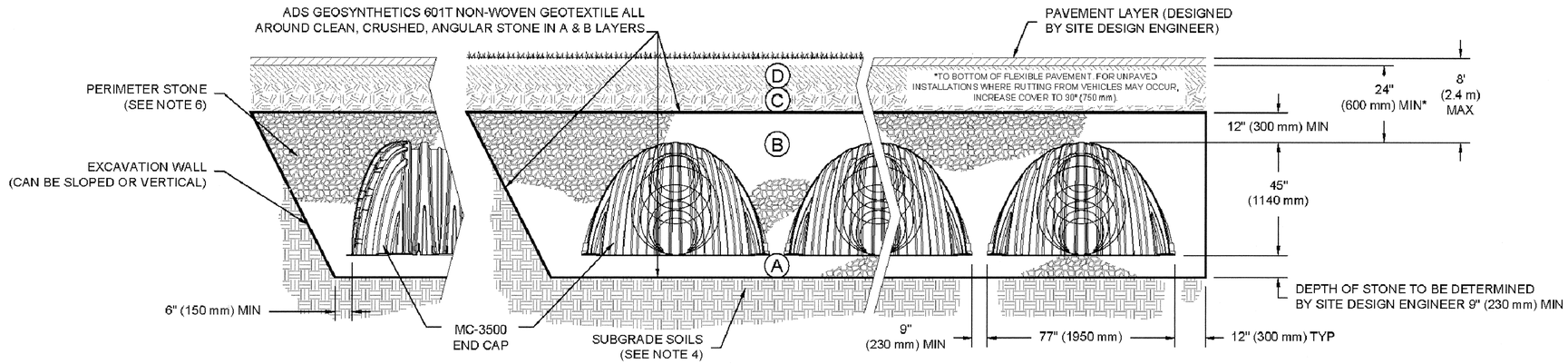

NOTES:

1. MC-3500 CHAMBERS SHALL CONFORM TO THE REQUIREMENTS OF ASTM F2418 "STANDARD SPECIFICATION FOR POLYPROPYLENE (PP) CORRUGATED WALL STORMWATER COLLECTION CHAMBERS".
2. MC-3500 CHAMBERS SHALL BE DESIGNED IN ACCORDANCE WITH ASTM F2787 "STANDARD PRACTICE FOR STRUCTURAL DESIGN OF THERMOPLASTIC CORRUGATED WALL STORMWATER COLLECTION CHAMBERS".
3. "ACCEPTABLE FILL MATERIALS" TABLE ABOVE PROVIDES MATERIAL LOCATIONS, DESCRIPTIONS, GRADATIONS, AND COMPACTION REQUIREMENTS FOR FOUNDATION, EMBEDMENT, AND FILL MATERIALS.
4. THE SITE DESIGN ENGINEER IS RESPONSIBLE FOR ASSESSING THE BEARING RESISTANCE (ALLOWABLE BEARING CAPACITY) OF THE SUBGRADE SOILS AND THE DEPTH OF FOUNDATION STONE WITH CONSIDERATION FOR THE RANGE OF EXPECTED SOIL MOISTURE CONDITIONS.
5. ONCE LAYER 'C' IS PLACED, ANY SOIL/MATERIAL CAN BE PLACED IN LAYER 'D' UP TO THE FINISHED GRADE. MOST PAVEMENT SUBBASE SOILS CAN BE USED TO REPLACE THE MATERIAL REQUIREMENTS OF LAYER 'C' OR 'D' AT THE SITE DESIGN ENGINEER'S DISCRETION.
6. PERIMETER STONE MUST BE EXTENDED HORIZONTALLY TO THE EXCAVATION WALL FOR BOTH VERTICAL AND SLOPED EXCAVATION WALLS.

CONNOQUENESSING SWM
CONNOQUENESSING, PA

DATE: 7-19-16 | DRAWN: BEH | PROJECT #: 151357 | CHECKED: GFI

REV	DRWN	CHK	DESCRIPTION
7-20-16	BEH	GFI	MC-3500 OPTION
8-3-16	SMAC	KMS	REVISED PER ENGINEER

StormTech
Detention • Retention • Water Quality
70 INWOOD ROAD, SUITE 3 | ROCKY HILL | CT | 06067
860-529-8188 | 888-892-2694 | WWW.STORMTECH.COM

ADS
ADVANCED DRAINAGE SYSTEMS, INC.
4640 TRUEMAN BLVD
HILLIARD, OH 43026
1-800-733-7473

THIS DRAWING HAS BEEN PREPARED BASED ON INFORMATION PROVIDED TO ADS UNDER THE DIRECTION OF THE SITE DESIGN ENGINEER OR OTHER PROJECT REPRESENTATIVE. THE SITE DESIGN ENGINEER SHALL REVIEW THIS DRAWING PRIOR TO CONSTRUCTION. IT IS THE ULTIMATE RESPONSIBILITY OF THE SITE DESIGN ENGINEER TO ENSURE THAT THE PRODUCT(S) DEPICTED AND ALL ASSOCIATED DETAILS MEET ALL APPLICABLE LAWS, REGULATIONS, AND PROJECT REQUIREMENTS

SHEET
3 OF 5

PLAN BOOK	PAGE
365	61

JOB NO. 4891
DWG FILE: 4891 SITE DETAILS.DWG

REVISIONS
SEPTEMBER 7, 2016

#1 COCHRAN AUTOMOTIVE
4520 WILLIAM PENN HIGHWAY MONROEVILLE PA, 15146

PCSM DETAILS AND NOTES
#1 COCHRAN SUBARU DEALERSHIP
TOWNSHIP OF CONNOQUENESSING BUTLER COUNTY, PA.

FAHRINGER, McCARTY, GREY, INC.
LANDSCAPE ARCHITECTS AND ENGINEERS MONROEVILLE, PA.

SCALE: AS NOTED
DATE: AUGUST 3, 2016
DRAWN BY: RGG/MHS
SHEET NUMBER: C-14a

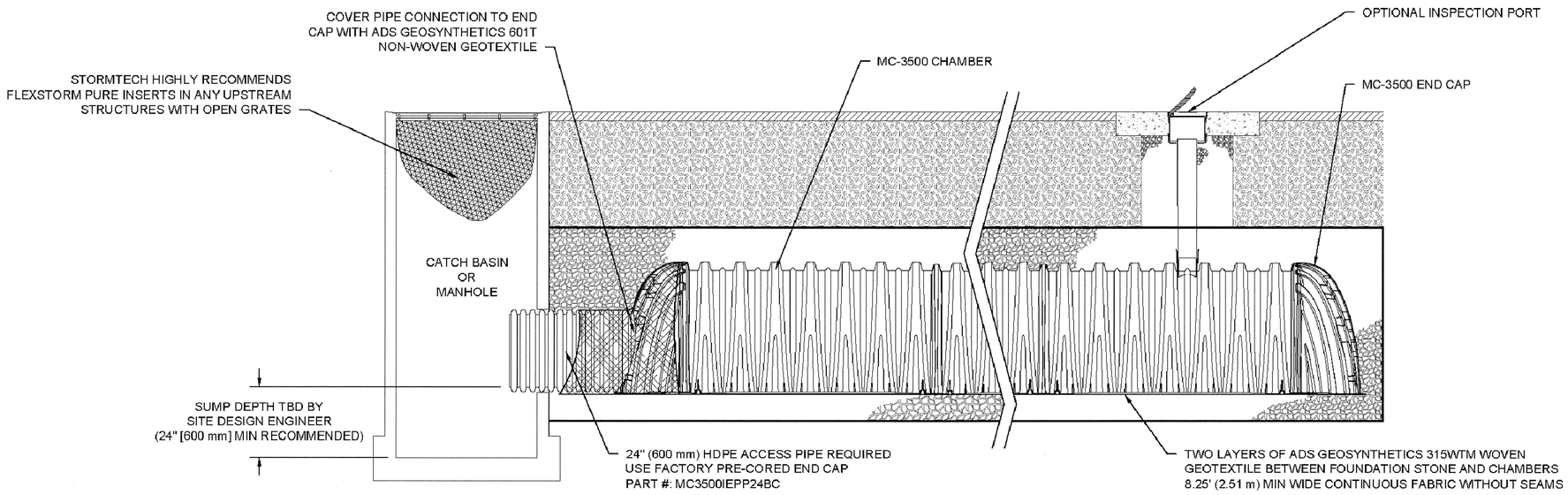

MC-3500 ISOLATOR ROW DETAIL
NTS

INSPECTION & MAINTENANCE

STEP 1) INSPECT ISOLATOR ROW FOR SEDIMENT
- A. INSPECTION PORTS (IF PRESENT)
  - A.1. REMOVE/OPEN LID ON NYLOPLAST INLINE DRAIN
  - A.2. REMOVE AND CLEAN FLEXSTORM FILTER IF INSTALLED
  - A.3. USING A FLASHLIGHT AND STADIA ROD, MEASURE DEPTH OF SEDIMENT AND RECORD ON MAINTENANCE LOG
  - A.4. LOWER A CAMERA INTO ISOLATOR ROW FOR VISUAL INSPECTION OF SEDIMENT LEVELS (OPTIONAL)
  - A.5. IF SEDIMENT IS AT, OR ABOVE, 3" (80 mm) PROCEED TO STEP 2. IF NOT, PROCEED TO STEP 3.
- B. ALL ISOLATOR ROWS
  - B.1. REMOVE COVER FROM STRUCTURE AT UPSTREAM END OF ISOLATOR ROW
  - B.2. USING A FLASHLIGHT, INSPECT DOWN THE ISOLATOR ROW THROUGH OUTLET PIPE
    - i) MIRRORS ON POLES OR CAMERAS MAY BE USED TO AVOID A CONFINED SPACE ENTRY
    - ii) FOLLOW OSHA REGULATIONS FOR CONFINED SPACE ENTRY IF ENTERING MANHOLE
  - B.3. IF SEDIMENT IS AT, OR ABOVE, 3" (80 mm) PROCEED TO STEP 2. IF NOT, PROCEED TO STEP 3.

STEP 2) CLEAN OUT ISOLATOR ROW USING THE JETVAC PROCESS
- A. A FIXED CULVERT CLEANING NOZZLE WITH REAR FACING SPREAD OF 45° (1.1 m) OR MORE IS PREFERRED
- B. APPLY MULTIPLE PASSES OF JETVAC UNTIL BACKFLUSH WATER IS CLEAN
- C. VACUUM STRUCTURE SUMP AS REQUIRED

STEP 3) REPLACE ALL COVERS, GRATES, FILTERS, AND LIDS; RECORD OBSERVATIONS AND ACTIONS.

STEP 4) INSPECT AND CLEAN BASINS AND MANHOLES UPSTREAM OF THE STORMTECH SYSTEM.

NOTES

1. INSPECT EVERY 6 MONTHS DURING THE FIRST YEAR OF OPERATION. ADJUST THE INSPECTION INTERVAL BASED ON PREVIOUS OBSERVATIONS OF SEDIMENT ACCUMULATION AND HIGH WATER ELEVATIONS.
2. CONDUCT JETTING AND VACTORING ANNUALLY OR WHEN INSPECTION SHOWS THAT MAINTENANCE IS NECESSARY.

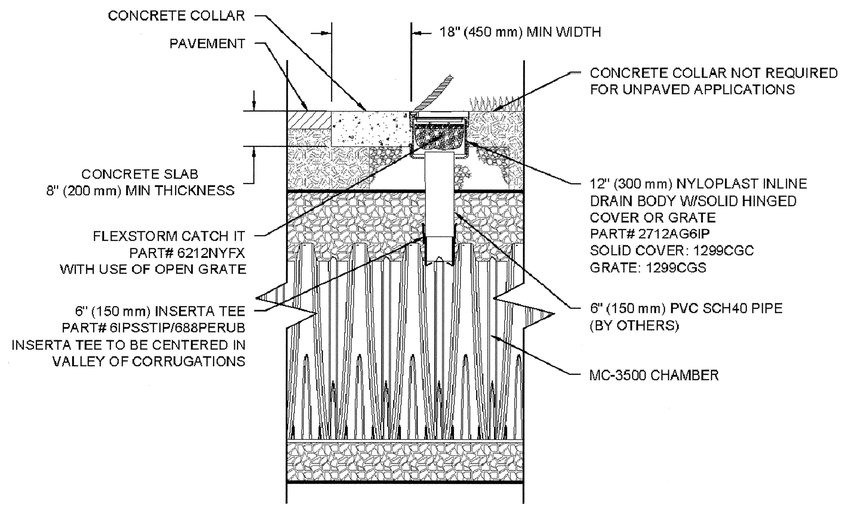

MC-3500 6" INSPECTION PORT DETAIL
NTS

PLAN BOOK	PAGE
365	62

JOB NO. 4691
SWG FILE: 4691 SITE DETAILS.DWG

REVISIONS
SEPTEMBER 7, 2016

#1 COCHRAN AUTOMOTIVE
4520 WILLIAM PENN HIGHWAY — MONROEVILLE PA, 15146

PCSM DETAILS AND NOTES
#1 COCHRAN SUBARU DEALERSHIP
TOWNSHIP OF CONNOQUENESSING — BUTLER COUNTY, PA.

FAHRINGER, McCARTY, GREY, INC.
LANDSCAPE ARCHITECTS AND ENGINEERS — MONROEVILLE, PA.

SCALE: AS NOTED
DATE: AUGUST 3, 2016
DRAWN BY: RGG/MHS
SHEET NUMBER: C–14b

CONNOQUENESSING SWM
CONNOQUENESSING, PA

DATE: 7-19-16 | DRAWN: BEH
PROJECT #: 151357 | CHECKED: GFI

REV	DRW	CHK	DESCRIPTION
7-20-16	BEH	GFI	MC-3500 OPTION
8-3-16	SMAC	KMS	REVISED PER ENGINEER

StormTech®
Detention • Retention • Water Quality
70 INWOOD ROAD, SUITE 3 | ROCKY HILL | CT | 06067
860-529-8188 | 888-892-2694 | WWW.STORMTECH.COM

ADS®
ADVANCED DRAINAGE SYSTEMS, INC.
4640 TRUEMAN BLVD
HILLIARD, OH 43026
1-800-733-7473

THIS DRAWING HAS BEEN PREPARED BASED ON INFORMATION PROVIDED TO ADS / UNDER THE DIRECTION OF THE SITE DESIGN ENGINEER OR OTHER PROJECT REPRESENTATIVE. THE SITE DESIGN ENGINEER SHALL REVIEW THIS DRAWING PRIOR TO CONSTRUCTION. IT IS THE ULTIMATE RESPONSIBILITY OF THE SITE DESIGN ENGINEER TO ENSURE THAT THE PRODUCT(S) DEPICTED AND ALL ASSOCIATED DETAILS MEET ALL APPLICABLE LAWS, REGULATIONS, AND PROJECT REQUIREMENTS.

SHEET 4 OF 5

UNDERDRAIN DETAIL

NTS

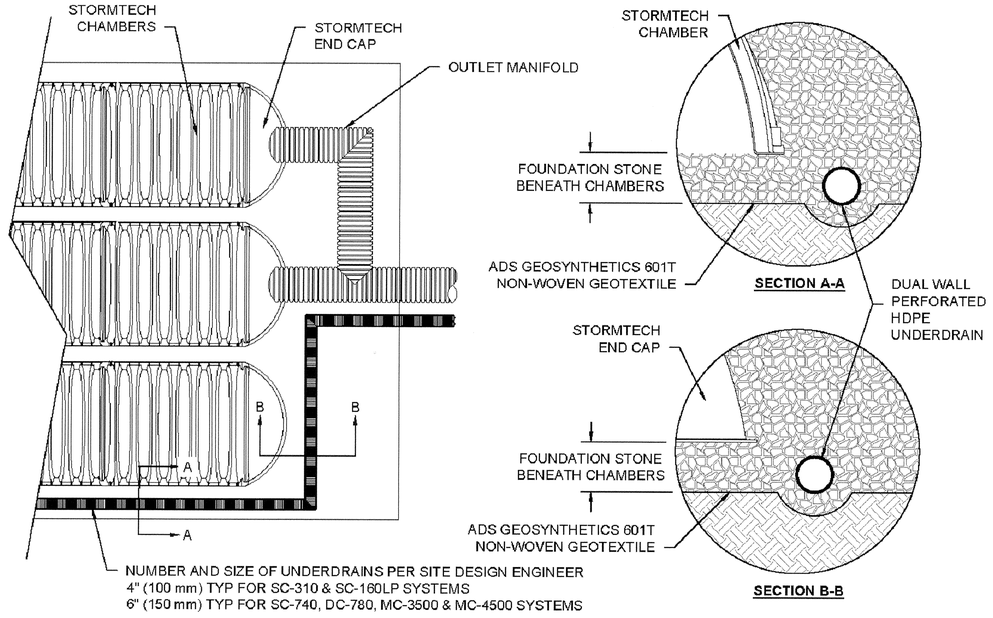

MC-3500 TECHNICAL SPECIFICATION

NTS

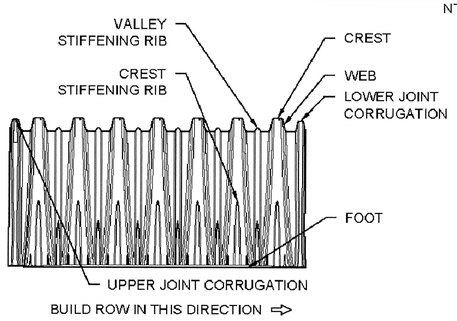

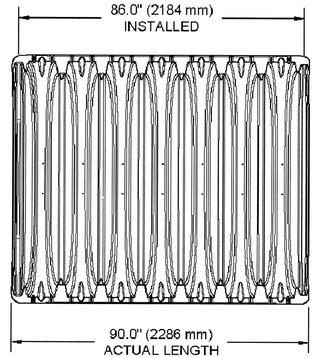

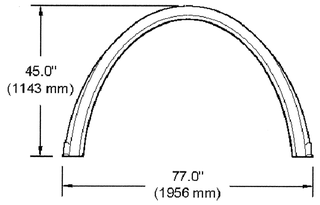

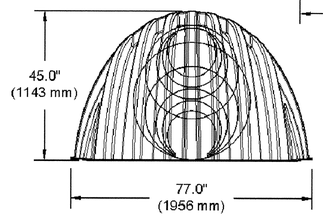

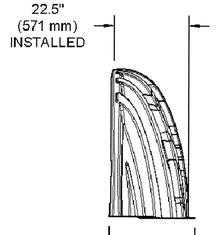

NOMINAL CHAMBER SPECIFICATIONS

SIZE (W X H X INSTALLED LENGTH)	77.0" X 45.0" X 86.0"	(1956 mm X 1143 mm X 2184 mm)
CHAMBER STORAGE	109.9 CUBIC FEET	(3.11 m³)
MINIMUM INSTALLED STORAGE*	178.9 CUBIC FEET	(5.06 m³)
WEIGHT	135.0 lbs.	(61.2 kg)

NOMINAL END CAP SPECIFICATIONS

SIZE (W X H X INSTALLED LENGTH)	77.0" X 45.0" X 22.5"	(1956 mm X 1143 mm X 571 mm)
END CAP STORAGE	14.9 CUBIC FEET	(0.42 m³)
MINIMUM INSTALLED STORAGE*	46.0 CUBIC FEET	(1.30 m³)
WEIGHT	50.0 lbs.	(22.7 kg)

*ASSUMES 12" (305 mm) STONE ABOVE, 9" (229 mm) STONE FOUNDATION AND BETWEEN CHAMBERS, 12" (305 mm) STONE PERIMETER IN FRONT OF END CAPS AND 40% STONE POROSITY

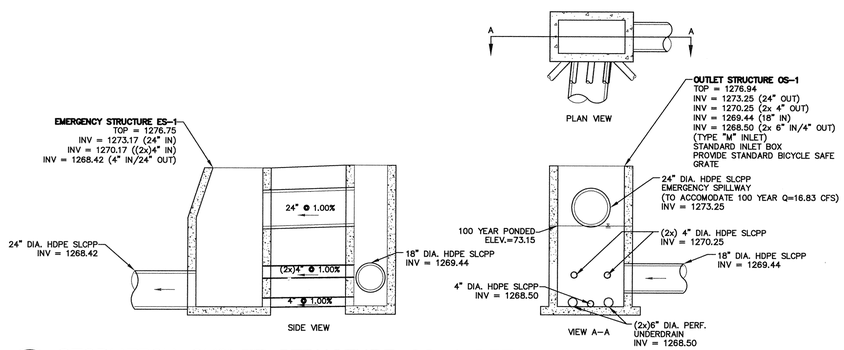

1 / C-14c STORMTECH OUTLET STRUCTURE OS-1 DETAIL

NO SCALE

STUBS AT BOTTOM OF END CAP FOR PART NUMBERS ENDING WITH "B"
STUBS AT TOP OF END CAP FOR PART NUMBERS ENDING WITH "T"

PART #	STUB	B	C
MC3500IEPP06T	6" (150 mm)	33.21" (844 mm)	---
MC3500IEPP06B		---	0.66" (17 mm)
MC3500IEPP08T	8" (200 mm)	31.16" (791 mm)	---
MC3500IEPP08B		---	0.81" (21 mm)
MC3500IEPP10T	10" (250 mm)	29.04" (738 mm)	---
MC3500IEPP10B		---	0.93" (24 mm)
MC3500IEPP12T	12" (300 mm)	26.36" (670 mm)	---
MC3500IEPP12B		---	1.35" (34 mm)
MC3500IEPP15T	15" (375 mm)	23.39" (594 mm)	---
MC3500IEPP15B		---	1.50" (38 mm)
MC3500IEPP18TC	18" (450 mm)	20.03" (509 mm)	---
MC3500IEPP18BC		---	1.77" (45 mm)
MC3500IEPP24TC	24" (600 mm)	14.48" (368 mm)	---
MC3500IEPP24BC		---	2.06" (52 mm)
MC3500IEPP30BC	30" (750 mm)	---	

NOTE: ALL DIMENSIONS ARE NOMINAL

CUSTOM PRECORED INVERTS ARE AVAILABLE UPON REQUEST. INVENTORIED MANIFOLDS INCLUDE 12-24" (300-600 mm) SIZE ON SIZE AND 15-48" (375-1200 mm) ECCENTRIC MANIFOLDS.
CUSTOM INVERT LOCATIONS ON THE MC-3500 END CAP CUT IN THE FIELD ARE NOT RECOMMENDED FOR PIPE SIZES GREATER THAN 10" (250 mm)
THE INVERT LOCATION IN COLUMN 'B' ARE THE HIGHEST POSSIBLE FOR THE PIPE SIZE.

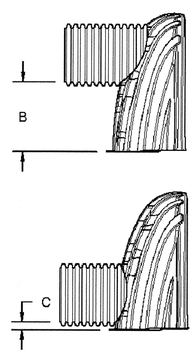

CONNOQUENESSING SWM
CONNOQUENESSING, PA

DATE: 7-19-16 | DRAWN: BEH | CHECKED: GFI | PROJECT #: 151357

REV	DRW	CHK	DESCRIPTION
7-20-16	BEH	GFI	MC-3500 OPTION
8-3-18	SMAC	KMS	REVISED PER ENGINEER

StormTech
Detention • Retention • Water Quality
70 INWOOD ROAD, SUITE 3 | ROCKY HILL, CT | 06067
860-529-8188 | 888-892-2694 | WWW.STORMTECH.COM

ADS
ADVANCED DRAINAGE SYSTEMS, INC.
4640 TRUEMAN BLVD
HILLIARD, OH 43026
1-800-733-7473

THIS DRAWING HAS BEEN PREPARED BASED ON INFORMATION PROVIDED TO ADS UNDER THE DIRECTION OF THE SITE DESIGN ENGINEER OR OTHER PROJECT REPRESENTATIVE. THE SITE DESIGN ENGINEER SHALL REVIEW THIS DRAWING PRIOR TO CONSTRUCTION. IT IS THE ULTIMATE RESPONSIBILITY OF THE SITE DESIGN ENGINEER TO ENSURE THAT THE PRODUCT(S) DEPICTED AND ALL ASSOCIATED DETAILS MEET ALL APPLICABLE LAWS, REGULATIONS, AND PROJECT REQUIREMENTS

SHEET 5 OF 5

PLAN BOOK	PAGE
365	63

JOB NO. 4891
DWG FILE: 4891-SITE DETAILS.DWG

REVISIONS
SEPTEMBER 7, 2016

#1 COCHRAN AUTOMOTIVE
4520 WILLIAM PENN HIGHWAY MONROEVILLE, PA, 15146

PCSM DETAILS AND NOTES
#1 COCHRAN SUBARU DEALERSHIP
TOWNSHIP OF CONNOQUENESSING BUTLER COUNTY, PA.

FAHRINGER, McCARTY, GREY, INC.
LANDSCAPE ARCHITECTS AND ENGINEERS MONROEVILLE, PA.

SCALE: AS NOTED
DATE: AUGUST 3, 2016
DRAWN BY: RGG/MHS
SHEET NUMBER: C-14c

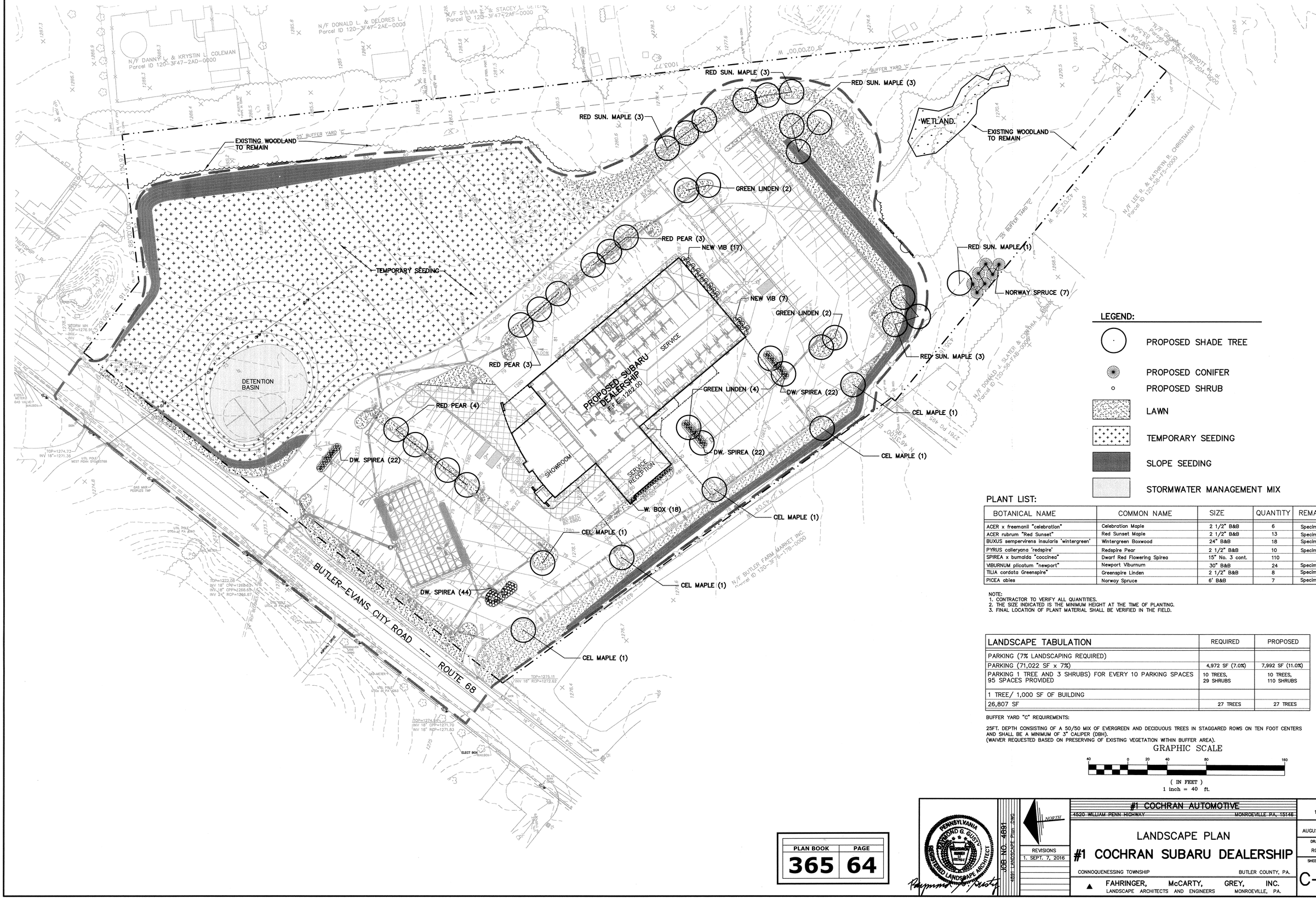

LEGEND:

- PROPOSED SHADE TREE
- PROPOSED CONIFER
- PROPOSED SHRUB
- LAWN
- TEMPORARY SEEDING
- SLOPE SEEDING
- STORMWATER MANAGEMENT MIX

PLANT LIST:

BOTANICAL NAME	COMMON NAME	SIZE	QUANTITY	REMARKS
ACER x freemanii "celebration"	Celebration Maple	2 1/2" B&B	6	Specimen
ACER rubrum "Red Sunset"	Red Sunset Maple	2 1/2" B&B	13	Specimen
BUXUS sempervirens insularis 'wintergreen'	Wintergreen Boxwood	24" B&B	18	Specimen
PYRUS calleryana 'redspire'	Redspire Pear	2 1/2" B&B	10	Specimen
SPIREA x bumalda "coccinea"	Dwarf Red Flowering Spirea	15" No. 3 cont.	110	
VIBURNUM plicatum "newport"	Newport Viburnum	30" B&B	24	Specimen
TILIA cordata Greenspire"	Greenspire Linden	2 1/2" B&B	8	Specimen
PICEA abies	Norway Spruce	6' B&B	7	Specimen

NOTE:
1. CONTRACTOR TO VERIFY ALL QUANTITIES.
2. THE SIZE INDICATED IS THE MINIMUM HEIGHT AT THE TIME OF PLANTING.
3. FINAL LOCATION OF PLANT MATERIAL SHALL BE VERIFIED IN THE FIELD.

LANDSCAPE TABULATION	REQUIRED	PROPOSED
PARKING (7% LANDSCAPING REQUIRED)		
PARKING (71,022 SF x 7%)	4,972 SF (7.0%)	7,992 SF (11.0%)
PARKING 1 TREE AND 3 SHRUBS) FOR EVERY 10 PARKING SPACES 95 SPACES PROVIDED	10 TREES, 29 SHRUBS	10 TREES, 110 SHRUBS
1 TREE/ 1,000 SF OF BUILDING		
26,807 SF	27 TREES	27 TREES

BUFFER YARD "C" REQUIREMENTS:

25FT. DEPTH CONSISTING OF A 50/50 MIX OF EVERGREEN AND DECIDUOUS TREES IN STAGGARED ROWS ON TEN FOOT CENTERS AND SHALL BE A MINIMUM OF 3" CALIPER (DBH).
(WAIVER REQUESTED BASED ON PRESERVING OF EXISTING VEGETATION WITHIN BUFFER AREA).

GRAPHIC SCALE

40 0 20 40 80 160

(IN FEET)
1 inch = 40 ft.

PLAN BOOK	PAGE
365	64

PENNSYLVANIA — RAYMOND G. RUSTY — REGISTERED LANDSCAPE ARCHITECT

JOB NO 4591
4591 LANDSCAPE Plan.DWG

NORTH

REVISIONS
1. SEPT. 7, 2016

#1 COCHRAN AUTOMOTIVE
4520 WILLIAM PENN HIGHWAY MONROEVILLE, PA. 15146

LANDSCAPE PLAN
#1 COCHRAN SUBARU DEALERSHIP
CONNOQUENESSING TOWNSHIP BUTLER COUNTY, PA.

FAHRINGER, McCARTY, GREY, INC.
LANDSCAPE ARCHITECTS AND ENGINEERS MONROEVILLE, PA.

SCALE 1"=40'
DATE AUGUST 3, 2016
DRAWN BY RGG/TDS
SHEET NUMBER C-19

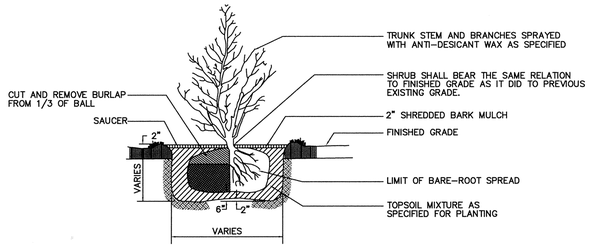

1 C-20 **SHRUB PLANTING DETAIL**
NO SCALE

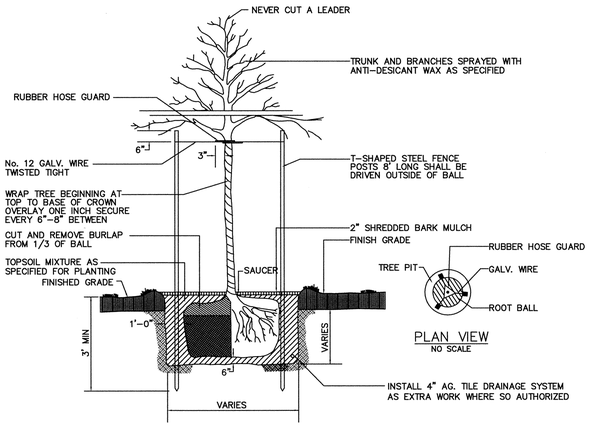

2 C-20 **DECIDUOUS TREE PLANTING DETAIL**
NO SCALE

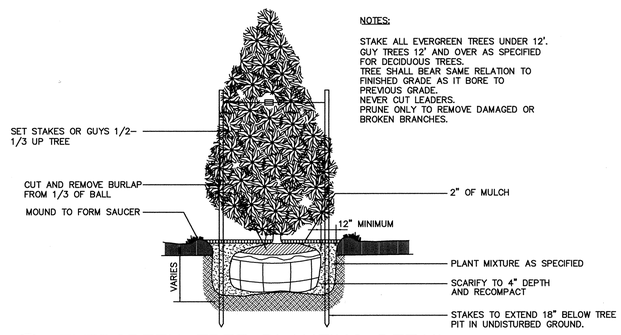

3 C-20 **EVERGREEN TREE PLANTING DETAIL**
NO SCALE

LANDSCAPING NOTES:

PLANTS:
PLANTS SHALL CONFORM TO VARIETIES SPECIFIED IN THE PLANT LIST. PLANTS SHALL BE TRUE TO BOTANICAL NAMES, STANDARDS OF SIZE, CULTURE, QUALITY FOR HIGHEST GRADES AND STANDARDS AS ADOPTED IN AMERICAN STANDARD FOR NURSERY STOCK. PLANTS SHALL HAVE NORMAL GROWTH, BE FRESHLY DUG, NURSERY-GROWN, SOUND, HEALTHY AND FREE OF DISEASE, INSECTS AND LARVA. DELIVER WITH FEDERAL AND STATE CERTIFICATES OF INSPECTION ATTACHED. SHRUBS SHALL MEET REQUIREMENTS FOR SPREAD OR HEIGHT AS STATED IN THE PLANT LIST. MEASUREMENT FOR HEIGHT SHALL BE TAKEN FROM GROUND LEVEL TO AVERAGE HEIGHT OF TOP OF SHRUB, NOT LONGEST BRANCH. SIDE BRANCHES SHALL BE GENEROUS AND WELL-TWIGGED. THE PLANT AS A WHOLE SHALL BE WELL-BUSHED TO THE GROUND.

TOPSOIL MIX:
FOR BACKFILLING DECIDUOUS PLANT PITS, MIX 4 PARTS BY VOLUME OF TOPSOIL AND 1 PART OF DECOMPOSED MUSHROOM, CATTLE OR STABLE MANURE. FOR BACKFILLING EVERGREEN PLANT PITS, MIX 4 PARTS BY VOLUME OF TOPSOIL AND 1 PART PEAT HUMUS. TOPSOIL SHALL NOT CONTAIN ADMIXTURES OF SUBSOIL AND SHALL BE CLEAN AND REASONABLY FREE FROM CLAY LUMPS WHICH MIGHT BE HINDRANCES TO PLANTING OPERATION. TOPSOIL MUST BE BROUGHT IN FROM AN OFF-SITE SOURCE.

FERTILIZERS:
FOR TREES AND SHRUBS, INCORPORATE FIVE (5) LBS. OF 6-10-4 FOR EACH CUBIC YARD OF BACKFILL. COMMERCIAL FERTILIZER SHALL BE STANDARD PRODUCTS COMPLYING WITH APPLICABLE LAWS.

GUARANTEE:
THE LIFE AND SATISFACTORY CONDITION OF ALL TREES, SHRUBS AND GROUNDCOVER EXCEPT THOSE AFFECTED BY VANDALISM, DESTRUCTION BY WILDLIFE OR NATURAL ELEMENTS, SHALL BE GUARANTEED BY THE CONTRACTOR FOR A PERIOD OF NOT LESS THAN ONE (1) YEAR FROM THE DATE OF FINAL ACCEPTANCE OR SUBSTANTIAL COMPLETION. ALL BEDS ARE TO BE KEPT WEED FREE AND MAINTAINED BY THE CONTRACTOR UNTIL FINAL ACCEPTANCE OF LANDSCAPING IS RECEIVED FROM THE OWNER'S REPRESENTATIVE.

PLANTED AREAS:
ALL PLANTED AREAS SHALL RECEIVE A 2" LAYER OF SHREDDED BARK MULCH. MULCH SHALL BE CLEAN SHREDDED BARK, FREE OF SAWDUST, STONES, WEEDS, DEBRIS AND HARMFUL CHEMICALS, AND BE AGED FOR AT LEAST 2 YEARS. PRIOR TO INSTALLING MULCH, INSTALL WEED BARRIER AS PER MANUFACTURER'S DIRECTIONS (DeWITT WEED BARRIER PRO-NON WOOVEN PERMEABLE LANDSCAPE FABRIC, TYPAR LANDSCAPE FABRIC OR APPROVED EQUAL).

MISCELLANEOUS:
1. PRIOR TO PLANTING, IT SHALL BE THE RESPONSIBILITY OF THE LANDSCAPE CONTRACTOR TO DETERMINE THE LOCATIONS OF ALL UTILITIES. REFER TO THE SITE/UTILITIES PLAN (C-3).
2. PRIOR TO SPREADING TOPSOIL, THE LANDSCAPE CONTRACTOR SHALL REMOVE ALL DEBRIS, ROCK, MORTAR, ETC. FROM ISLANDS AND LAWN AREAS.
3. ALL PLANTING ISLANDS TO RECEIVE A MINIMUM OF 12" OF TOPSOIL (AFTER SETTLEMENT). ALL LAWN AREAS AND DISTURBED AREAS SHALL RECEIVE A MINIMUM OF 6" OF TOPSOIL (AFTER SETTLEMENT).
4. ALL TREE PITS ARE TO BE EXCAVATED A MINIMUM OF 3' DEEP AND BACKFILLED WITH SPECIFIED TOPSOIL MIX. EXCAVATION FOR SHRUBS SHALL BE A MINIMUM OF 2' DEEP AND BACKFILLED WITH THE SPECIFIED TOPSOIL MIX.
5. PROJECT AREA SHALL BE CLEANED OF ALL FOREIGN MATTER AND PLACED IN A FIRST-CLASS CONDITION IMMEDIATELY BEFORE FINAL ACCEPTANCE OF WORK.

PERMANENT SEEDING SPECIFICATIONS:
MATERIALS:

TOPSOIL: THE TOPSOIL DEPTH FOR ALL PERMANENT LAWN SEEDING SHALL BE A MINIMUM OF SIX (6) INCHES DEEP AFTER SETTLEMENT. SEE LANDSCAPING NOTES FOR ADDITIONAL REQUIREMENTS.

LIMESTONE: RAW, GROUND AGRICULTURAL LIMESTONE CONTAINING MORE THAN 90 PERCENT CALCIUM CARBONATES (ADJUST PH LEVELS TO 6.5 TO 7.0). APPLY AT RATE OF 300 LBS. PER 1000 SQ. FT. IN ABSENCE OF A SOILS TEST. IF A SOILS TEST IS PERFORMED, APPLY AT A RATE SUGGESTED BY THAT TEST.

COMMERCIAL FERTILIZER: USE 23 POUNDS PER 1,000 SQ. FT. OF 10-20-20 IF A SOILS TEST IS NOT PERFORMED. IF A SOILS TEST IS PERFORMED, APPLY AT A RATE SUGGESTED BY THAT TEST. MIX FERTILIZER INTO SEEDBED PRIOR TO SEEDING, OR IN A TANK WITH SEED, WHEN HYDRO SEEDING.

MULCH: CLEAN OAT OR WHEAT STRAW SHALL BE FREE FROM MATURE SEED-BEARING STALKS OR ROOTS OF PROHIBITED OR NOXIOUS WEEDS AS DEFINED BY THE PENNSYLVANIA SEED ACT. APPLY AT A RATE OF 3 BALES PER 1,000 SQUARE FEET (3 TONS PER ACRE). PRECAUTIONS SHALL BE TAKEN TO STABILIZE MULCH UNTIL THE VEGETATIVE COVER IS ESTABLISHED.

SEED MIXTURE: SHALL BEAR A GUARANTEED STATEMENT OF ANALYSIS AND SHALL BE COMPOSED OF THE FOLLOWING VARIETIES AND MIXED IN PROPORTIONS SPECIFIED.

PERMANENT SEED MIXTURE	PROPORTION BY WEIGHT	MINIMUM PURITY	MINIMUM GERMINATION
LIBERATOR KENTUCKY BLUEGRASS	16.45%	85%	85%
EVERGLADE KENTUCKY BLUEGRASS	16.45%	85%	85%
MIDNIGHT KENTUCKY BLUEGRASS	16.45%	85%	85%
REVENGE GLX PERENNIAL RYEGRASS	16.45%	98%	90%
ACCENT PERENNIAL RYEGRASS	16.45%	98%	90%
GRANDSLAM PERENNIAL RYEGRASS	16.45%	98%	90%

PERMANENT SEED MIXTURE IS DISTRIBUTED BY E.H. GRIFFITH, INC., 2250 PALMER STREET, PITTSBURGH, PA 15218-2676 (PHONE 412-271-3365) AND IS DESIGNATED AS TYPE "E" - PLUS SEED MIX (GS-E5).

PERMANENT SEEDING: SHALL BE APPLIED AT A RATE OF FIVE (5) POUNDS PER ONE THOUSAND (1,000) SQUARE FEET.

PREPARATION OF SEEDING: GRADE AS NECESSARY TO BRING SUBGRADE TO A TRUE, SMOOTH SLOPE PARALLEL TO AND SIX INCHES BELOW FINISH GRADE. PLACE TOPSOIL OVER SPECIFIED AREAS TO A DEPTH SUFFICIENTLY GREATER SIX (6) INCHES SO THAT AFTER SETTLEMENT AND LIGHT ROLLING THE COMPLETE WORK WILL CONFORM TO LINES, GRADES AND ELEVATIONS SHOWN.

FERTILIZER AND AGRICULTURAL LIMESTONE SHALL BE THOROUGHLY INCORPORATED INTO THE SOIL BY ROTOTILLING OR OTHER METHOD TO A MINIMUM DEPTH OF FOUR (4) INCHES. THE ENTIRE SURFACE SHALL THEN BE RAKED AND ROLLED. AREAS TO BE SEEDED SHALL THEN BE LOOSENED TO A DEPTH OF TWO (2) INCHES. SEEDING SHALL BE DONE IN TWO SEPARATE OPERATIONS. THE SECOND SEEDING SHALL BE DONE IMMEDIATELY AFTER THE FIRST AND AT RIGHT ANGLES TO THE FIRST SEEDING AND LIGHTLY RAKED INTO THE SOIL. MULCH SEEDED AREAS IMMEDIATELY AFTER SEEDING.

SLOPE SEEDING SPECIFICATION

MATERIALS:
TOPSOIL NO TOPSOIL SHALL BE REQUIRED ON SLOPES OF 2:1 OR STEEPER

LIMESTONE. RAW, GROUND AGRICULTURAL LIMESTONE CONTAINING MORE THAN 90% CALCIUM CARBONATES (ADJUST PH LEVELS TO 6.5 TO 7.0). APPLY AT A RATE OF 300 POUNDS PER 1,000 SQUARE FEET (MINIMUM 6 TONS PER ACRE) IN ABSENCE OF A SOILS TEST. IF A SOILS TEST IS PERFORMED, APPLY AT THE RATE SUGGESTED BY THAT TEST.

COMMERCIAL FERTILIZER. USE 1000 POUNDS 10-20-20 PER TO THE ACRE (23 POUNDS PER 1,000 SQUARE FEET RESPECTIVELY) MIXED INTO SEEDBED PRIOR TO SEEDING OR IN A TANK WITH SEED WHEN HYDROSEEDING.

EROSION CONTROL BLANKETS. SHALL BE BIODEGRADABLE, ROLLED PRODUCT AS APPROVED BY THE OWNER'S REPRESENTATIVE. ANCHORING SHALL BE WITH WIRE STAPLES. THE RECOMMENDED STAPLE SIZES WILL VARY BASED ON SOIL CONDITIONS. INSTALLATION SHALL BE ACCORDING TO MANUFACTURER'S INSTRUCTIONS.

FLEXIBLE GROWTH MEDIUM. FLEXTERRA FGM, AS MANUFACTURED BY PROFILE PRODUCTS AND SHALL CONFORM TO THE FOLLOWING TYPICAL PROPERTY VALUES WHEN UNIFORMLY APPLIED AT A RATE OF 3500 POUNDS PER ACRE. STRICTLY COMPLY WITH MANUFACTURER'S INSTALLATION INSTRUCTIONS AND RECOMMENDATIONS. FOR OPTIMUM PUMPING AND APPLICATION PERFORMANCE USE APPROVED MECHANICALLY AGITATED, HYDRAULIC SEEDING/MULCHING MACHINES WITH A FAN-TYPE NOZZLE (50-DEGREE TIP). APPLY FGM FROM OPPOSING DIRECTIONS AND TO ACHIEVE BEST SOIL COVERAGE. THE APPLICATION RATE SHALL BE AS FOLLOW: 2:1 SLOPES = 3500 LBS/ACRE AND 3:1 SLOPES = 3000 LBS/ACRE. LOCAL DISTRIBUTOR: JMD COMPANY, BETHEL PARK, PA (PHONE 412-833-7100)

SEED MIXTURE. SEED MIXTURE SHALL BEAR A GUARANTEED STATEMENT OF ANALYSIS, AND SHALL BE COMPOSED OF THE VARIETIES FOLLOWING AND MIXED IN THE PROPORTIONS SPECIFIED:

TYPE "C" SEED MIXTURE: SLOPE STABILIZATION (NATIVE STEEP SLOPE MIX WITH ANNUAL RYEGRASS, ERNMX-181)

SCIENTIFIC NAME	COMMON NAME	PERCENT BY WEIGHT
Lollum multiflorum	Annual Ryegrass	20.00%
Andropogon scoparius	Little Bluestem, Camper	20.00%
Elymus canadensis	Canada Wild Rye	20.00%
Sporobolus asper	Rough Dropseed	10.00%
Bromus ciliatus	Fringed Brome	10.00%
Agrotis perennans	Autumn Bentgrass	10.00%
Rudbeckia hirta	Black Eyed Susan	5.00%
Aster prenanthoides/ Novi-belgii	Zigzag Aster/New York Aster ,Mix	3.00%
Solidago nemoralis	Gray Goldenrod	2.00%

Seed Mixture C is produced by Ernest Conservation Seeds, 9006 Mercer Pike, Meadville, PA 16335 (Phone 800-873-3321) and is designated as: Native Steep Slope Mix with Annual Ryegrass (ERNMX-181).

SLOPE SEEDING. SHALL BE APPLIED AT A RATE OF ONE (1) POUND PER ONE THOUSAND (1,000) SQUARE FEET.

ALL AREAS TO BE SEEDED SHALL BE SCARIFIED TO A MINIMUM DEPTH OF AT LEAST TWO INCHES PARALLEL TO THE CONTOURS BY MECHANICAL MEANS AS APPROVED BY THE LANDSCAPE ARCHITECT. THE COMMERCIAL FERTILIZER AND AGRICULTURAL GROUND LIMESTONE SHALL BE SPREAD EVENLY ON THE AREAS TO BE SEEDED PRIOR TO TILLAGE AND INCORPORATED INTO THE SOIL AT THE SAME TIME.

MULCH SEEDED AREAS IMMEDIATELY AFTER SEEDING.

SEEDING. SEED ALL AREAS WITH A SLOPE OF 2:1 OR STEEPER WITH SLOPE SEEDING MIX UNLESS NOTED OTHERWISE ON THE DRAWNGS.

STORMWATER MANAGEMENT SPECIFICATION

MATERIAL:
TOSOIL PLACE MINIMUM OF 6" TOPSOIL ON 3:1 SLOPES

LIMESTONE RAW, GROUND AGRICULTURAL LIMESTONE CONTAINING MORE THAN 90% CALCIUM CARBONATES (ADJUST PH LEVELS TO 6.5 TO 7.0). APPLY AT A RATE OF 200 POUNDS PER 1,000 SQUARE FEET.

COMMERCIAL FERTILIZER USE 500 POUNDS 8-16-16 OR 800 POUNDS 5-10-10 PER TO THE ACRE (12 AND 18 POUNDS TO 1,000 SQUARE FEET RESPECTIVELY) MIXED INTO SEEDBED PRIOR TO SEEDING OR IN A TANK WITH SEED WHEN HYDROSEEDING.

FLEXIBLE GROWTH MEDIUM FLEXTERRA FGM, AS MANUFACTURED BY PROFILE PRODUCTS AND SHALL CONFORM TO THE FOLLOWING TYPICAL PROPERTY VALUES WHEN UNIFORMLY APPLIED AT A RATE OF 3500 POUNDS PER ACRE. STRICTLY COMPLY WITH MANUFACTURER'S INSTALLATION INSTRUCTIONS AND RECOMMENDATIONS. FOR OPTIMUM PUMPKIN AND APPLICATION PERFORMANCE USE APPROVED MECHANICALLY AGITATED, HYDRAULIC SEEDING/MULCHING MACHINES WITH A FAN-TYPE NOZZLE (50-DEGREE TIP). APPLY FGM FROM OPPOSING DIRECTIONS AND TO ACHIEVE BEST SOIL COVERAGE. THE APPLICATION RATE SHALL BE AS FOLLOW: 2:1 SLOPES = 3500 LBS/ACRE AND 3:1 SLOPES = 3000 LBS/ACRE. LOCAL DISTRIBUTOR: JMD COMPANY, BETHEL PARK, PA (PHONE 412-833-7100) OR APPROVED EQUAL.

SEED MIXTURE SHALL BEAR A GUARANTEED STATEMENT OF ANALYSIS AND SHALL BE COMPOSED OF THE VARIETIES FOLLOWING AND MIZED IN PROPORTIONS SPECIFIED. SHOWY NORTHEAST NATIVE WILDFLOWER MIX IS PRODUCED BY ERNST CONSERVATION SEEDS (800-873-3321) OR AN APPROVED EQUAL.

SLOPE SEEDING. SHALL BE APPLIED AT THE RATE SPECIFIED.

ALL AREAS TO BE SEEDED SHALL BE SCARIFIED TO A MINIMUM DEPTH OF AT LEAST TWO INCHES PARALLEL TO CONTOURS BY MECHANICAL MEANS AS APPROVED BY THE PROFESSIONAL. THE COMMERCIAL FERTILIZER AND AGRICULTURAL GROUND LIMESTONE MAY BE SPREAD EVENLY ON AREAS TO BE SEEDED PRIOR TO TILLAGE AND INCORPORATED INTO THE SOIL AT THE SAME TIME.

SEEDING: SEED ALL AREAS WITH SLOPES OF 3:1 OR STEEPER WITH SLOPE SEEDING MIX UNLESS NOTED OTHERWISE ON THE DRAWNGS.

SEED MIX 'D'
STORMWATER MANAGEMENT
(RAIN GARDEN MIX ERNMX-180)

13.00%	CAREX VULPINOIDEA	FOX SEDGE
12.00%	ELYMUS VIRGINICUS	VIRGINIA WILD RYE
11.00%	POA PALUSTRIS	FOWL BLUEGRASS
9.00%	VERBENA HASTATE	BLUE VERVAIN
6.00%	JUNCUS EFFUSES	SOFT RUSH
5.00%	ASTER NOVAE-ANGLIAE	NEW ENGLAND ASTER
5.00%	ZIZIA AUREA	GOLDEN ALEXANDERS
4.00%	RUDBECKIA HIRTA	BLACK EYED SUSAN
4.00%	ELYMUS HYSTIX	BOTTLEBRUSH GRASS
4.00%	HELENIUM AUTUMNALE	COMMON SNEEZEWEED
4.00%	ASTER PRENANTHOIDES	ZIGZAG ASTER
3.00%	ASTER UMBELLATUS	FLAT TOPPED WHITE ASTER
3.00%	AGROSTIS SCABRA	TICKLEGRASS (ROUGH BENTGRASS)
3.00%	MIMULUS RINGENS	SQUARE STEMMED MONKEY FLOWER
3.00%	PENSTEMON DIGITALIS	TALL WHITE BEARD TONGUE
2.00%	DESMODIUM CANADENSE	SHOWY TICK TREFOIL
2.00%	MONADA FISTULOSA	WILD BERGAMOT
2.00%	ASCLEPIAS INCARNATE	SWAMP MILKWEED
2.00%	GEUM IACINIATUM	ROUGH AVENS
1.00%	PENTHORUM SEDOIDES	DITCH STONECROP
1.00%	CHELONE GLABRA	TURTLEHEAD
1.00%	LUDWIGIA ALTERNIFOLIA	SEEDBOX

RAIN GARDEN MIX IS PRODUCED BY ERNST CONSERVATION SEEDS, 9006 MERCER PIKE, MEADVILLE, PA PHONE: 800-873-3321 OR AN APPROVED EQUAL

SEEDING SHALL BE APPLIED AT A RATE OF ONE (1) POUND PER ONE THOUSAND (1,000) SQUARE FEET.

ALL AREAS TO BE SEEDED SHALL BE SCARIFIED TO A MINIMUM DEPTH OF AT LEAST TWO INCHES PARALLEL TO CONTOURS BY MECHANICAL MEANS AS APPROVED BY THE PROFESSIONAL. THE COMMERCIAL FERTILIZER AND AGRICULTURAL GROUND LIMESTONE MAY BE SPREAD EVENLY ON AREAS TO BE SEEDED PRIOR TO TILLAGE AND INCORPORATED INTO THE SOIL AT THE SAME TIME. MULCH SEEDED AREAS IMMEDIATELY AFTER SEEDING.

PLAN BOOK	PAGE
365	65

PENNSYLVANIA · RAYMOND G. GUSTY · REGISTERED LANDSCAPE ARCHITECT

JOB NO. 4891
DWG FILE: 4891 SITE DETAILS.DWG

REVISIONS

#1 COCHRAN AUTOMOTIVE
4520 WILLIAM PENN HIGHWAY MONROEVILLE PA, 15146

LANDSCAPE DETAILS AND NOTES
#1 COCHRAN SUBARU DEALERSHIP
CONNOQUENESSING TOWNSHIP BUTLER COUNTY, PA.

FAHRINGER, McCARTY, GREY, INC.
LANDSCAPE ARCHITECTS AND ENGINEERS MONROEVILLE, PA.

SCALE: AS NOTED
DATE: AUGUST 3, 2016
DRAWN BY: RGG/TDS
SHEET NUMBER: C-20