AutoZone

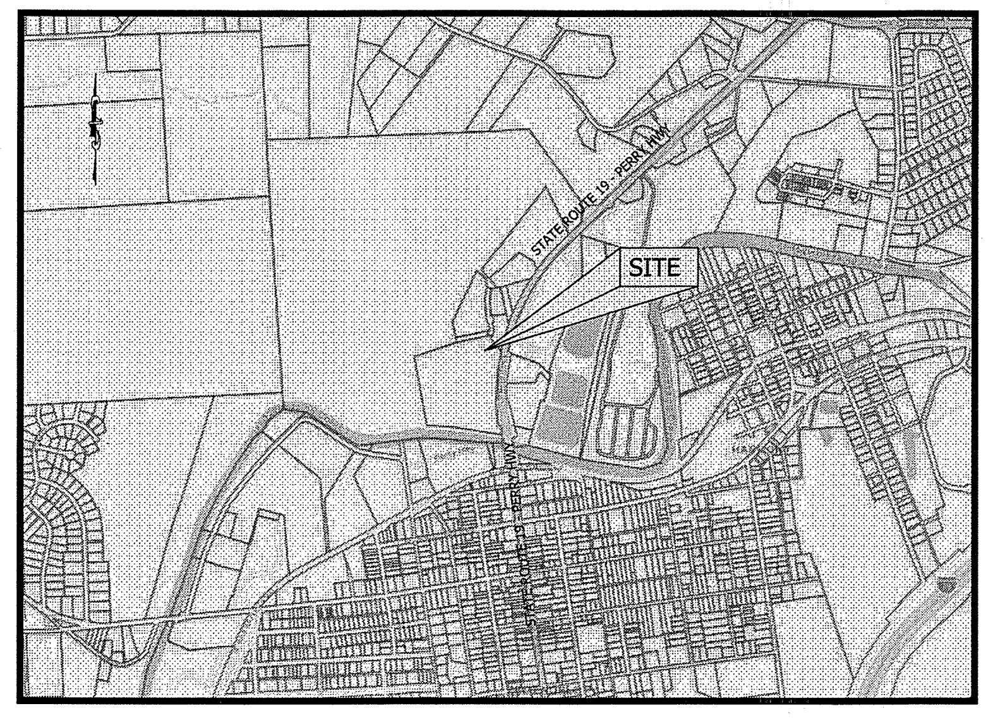

SITE LOCATION MAP
SCALE: 1" = 2,000'

Preliminary/Final Land Development Plans
For
Proposed
AutoZone Store #10051
100 Perry Highway
Township of Jackson
County of Butler
Commonwealth of Pennsylvania

Instr: 202510280017863
Pgs: 2 F: $85.00 10/28/2025 2:21 PM
Michele Mustello T20250015011
Butler County Recorder PA

PLAN BOOK	PAGE
434	1

This plat was delivered to Applicant
by Jackson Township on the 27th day of
October, 2025
Township Manager

Applicant / Developer:

AutoZone Development, LLC
123 South Front Street, 3rd Floor
Memphis, Tennessee 38103

Civil Engineer:

MDM SURVEYORS & ENGINEERS, LLC
Surveyors • Engineers • Site Planners
375 Northgate Drive
Warrendale, PA 15086
Ph: (724) 934-2810 Fax: (724) 934-2811
mdmcadd@mdmllc.com
www.mdmllc.com

GENERAL NOTES

1. ALL CONSTRUCTION SHALL COMPLY WITH CITY, MUNICIPALITY, STATE AND COUNTY CODES AND STANDARDS. ALL CONSTRUCTION SHALL BE PERFORMED IN ACCORDANCE WITH ALL APPLICABLE OSHA, FEDERAL, STATE AND LOCAL REGULATIONS.
2. THE CONTRACTOR SHALL OBTAIN ALL NECESSARY CONSTRUCTION PERMITS REQUIRED TO PERFORM ALL OF THE WORK. THE CONTRACTOR SHALL POST ALL BONDS, PAY ALL FEES, PROVIDE PROOF OF INSURANCE AND PROVIDE TRAFFIC CONTROL NECESSARY FOR THIS WORK.
3. THE CONTRACTOR SHALL VERIFY ALL SITE CONDITIONS IN THE FIELD AND CONTACT THE OWNER IF THERE ARE ANY QUESTIONS OR CONFLICTS REGARDING THE CONSTRUCTION DOCUMENTS AND/OR FIELD CONDITIONS SO THAT APPROPRIATE REVISIONS CAN BE MADE PRIOR TO CONSTRUCTION. ANY CONFLICT BETWEEN DRAWINGS AND THE SPECIFICATIONS SHALL BE CONFIRMED WITH THE OWNER PRIOR TO BIDDING.
4. SHOULD ANY UNCHARTED, OR INCORRECTLY CHARTED, EXISTING PIPING OR OTHER UTILITY BE UNCOVERED DURING EXCAVATION, CONSULT THE OWNER IMMEDIATELY BEFORE PROCEEDING FURTHER WITH THE WORK IN THIS AREA.
5. THE CONTRACTOR SHALL ABIDE BY ALL OSHA, FEDERAL, STATE AND LOCAL REGULATIONS WHEN OPERATING CRANES, BOOMS, HOISTS, ETC. IN CLOSE PROXIMITY TO OVERHEAD ELECTRIC LINES. IF CONTRACTOR MUST OPERATE EQUIPMENT CLOSE TO ELECTRIC LINES, CONTACT THE POWER COMPANY TO MAKE ARRANGEMENTS FOR PROPER SAFEGUARDS.
6. THE CONTRACTOR SHALL RESTORE ANY STRUCTURES, PIPE, UTILITY, PAVEMENT, CURBS, SIDEWALKS, LANDSCAPED AREAS, ETC. WITHIN THE SITE OR ADJOINING PROPERTIES DISTURBED DURING DEMOLITION OR CONSTRUCTION TO THEIR ORIGINAL CONDITION OR BETTER, AND TO THE SATISFACTION OF THE OWNER AND LOCAL MUNICIPALITY.
7. THE CONTRACTOR SHALL BE RESPONSIBLE TO INSTALL AND MAINTAIN TRAFFIC DEVICES FOR PROTECTION OF PEDESTRIANS AND VEHICLES CONSISTING OF DRUMS, BARRIERS, SIGNS, LIGHTS, FENCES AND UNIFORM TRAFFIC CONTROLLERS IN ACCORDANCE WITH PennDOT MPT SPECIFICATIONS AND/OR AS REQUIRED OR DIRECTED BY THE LANDLORD OR OWNER OR LOCAL GOVERNING AUTHORITIES. CONTRACTOR SHALL MAINTAIN ALL TRAFFIC LANES AND PEDESTRIAN WALKWAYS AT ALL TIMES UNLESS WRITTEN APPROVAL FROM PennDOT, CITY, MUNICIPALITY, COUNTY, OR OTHER GOVERNING AUTHORITY IS RECEIVED.
8. THE CONTRACTOR SHALL NOTIFY THE OWNER SHOULD ANY DISCREPANCY REGARDING THE PROPOSED WORK OR UNFORESEEN CONDITIONS ARISE PRIOR TO PROCEEDING FURTHER WITH THE AFFECTED WORK.
9. THE CONTRACTOR SHALL PROVIDE AS-BUILT RECORDS OF ALL CONSTRUCTION (INCLUDING UNDERGROUND UTILITIES) TO THE OWNER FOLLOWING COMPLETION OF CONSTRUCTION ACTIVITIES.
10. REFER TO DETAIL SHEETS FOR EROSION AND SEDIMENT CONTROL, STORM DRAINAGE, UTILITY, PAVING, CURBING, SIGNAGE, AND OTHER DETAILS AS APPLICABLE.
11. PAVEMENT MARKINGS SHALL BE IN ACCORDANCE WITH PENNDOT SPECIFICATIONS AND SHALL BE EITHER COLD LAID THERMOPLASTIC TAPE OR PAINTED AS DESIGNATED ON THE PLANS OR PAVEMENT MARKING DETAILS.
12. ALL SITE DIMENSIONS ARE REFERENCED TO THE FACE OF CURBS OR EDGE OF PAVING UNLESS OTHERWISE NOTED. ALL BUILDING DIMENSIONS ARE REFERENCED TO THE OUTSIDE FACE OF THE STRUCTURE UNLESS OTHERWISE NOTED.
13. ALL PAVING MATERIALS FURNISHED AND WORK COMPLETED SHALL BE IN STRICT ACCORDANCE WITH PennDOT SPECIFICATIONS PUBLICATION 408 AND PennDOT STANDARD DETAILS AS AMENDED UNLESS OTHERWISE SPECIFIED.
14. THE CONTRACTOR IS RESPONSIBLE FOR THE REMOVAL AND DISPOSAL OF ALL RUBBISH, TRASH, DEBRIS, AND ORGANIC MATERIAL IN A LAWFUL MANNER.
15. THE CONTRACTOR SHALL BE RESPONSIBLE FOR VERIFYING ALL DIMENSIONS FOR BUILDING, WALLS, CONCRETE SLABS, AND UTILITY SERVICE POINT CONNECTIONS AND NOTIFYING THE OWNER OF ANY CONFLICTS OR DISCREPANCIES PRIOR TO CONSTRUCTION. THE CONTRACTOR SHALL REFERENCE BUILDING CONSTRUCTION PLANS FOR EXACT LOCATIONS OF ALL UTILITY CONNECTIONS TO BUILDINGS, DOOR STEP LOCATIONS, ETC.
16. INFORMATION ON EXISTING UTILITIES HAS BEEN COMPILED FROM AVAILABLE INFORMATION INCLUDING UTILITY COMPANY AND MUNICIPAL RECORD MAPS AND FIELD SURVEY AND IS NOT GUARANTEED CORRECT OR COMPLETE. UTILITIES ARE SHOWN TO ALERT THE CONTRACTOR TO THEIR PRESENCE AND THE CONTRACTOR IS SOLELY RESPONSIBLE FOR DETERMINING ACTUAL LOCATIONS AND ELEVATIONS OF ALL UTILITIES INCLUDING SERVICES. PRIOR TO DEMOLITION OR CONSTRUCTION, THE CONTRACTOR SHALL CONTACT THE PA ONE CALL SYSTEM 72 HOURS BEFORE COMMENCEMENT OF WORK AT 1-800-242-1776 AND VERIFY ALL LOCATIONS.
17. THE CONTRACTOR SHALL SUBMIT SHOP DRAWINGS OF ALL PRODUCTS, MATERIALS AND PLAN SPECIFICATIONS TO THE ARCHITECT AS REQUIRED FOR REVIEW AND APPROVAL, PRIOR TO FABRICATION OR DELIVERY TO THE SITE. ALLOW A MINIMUM OF 14 WORKING DAYS FOR REVIEW.

Creekside Plaza mixed use parking calculations with AutoZone Out Parcel
Information shown below as provided by the Land Owner.

Unit #	Tenant	USE	sq. ft.	Employee Parking	Customer Parking	Total Parking per suite
100	AutoZone	Retail and Service	6800	4	28	27
101-A	Subway	Restaurant	1400	3	8	11
101-B	Pure Harmony	Professional Offices	1440	2	2	4
102	Tin Man Suites	Restaurant	1856	2	5	7
103	CO-Hill Urgent Care	Professional offices/medical	2000	2	15	17
104	Harmony Chiropractic's	Professional offices/medical	2000	3	7	10
105 106	Los Mayas Mexican Restaurant	Restaurant	4000	6	22	28
107	H&R Block	Professional offices	2000	4	10	14
108	Rocksie Hair Studio	Personal Services	2000	5	10	15
109	Right at Home	Professional Offices	2000	4	10	14
110	Penn-Ohio Physical Therapy	Professional Offices	2000	2	6	8
111	Snap Fitness	Entertainment / Recreation	2000	2	10	12
112	Snap Fitness	Entertainment / Recreation	6740	3	30	33
115	Speedy Furniture	Retail and Service	10186	2	25	27
119	The Coffee Roasters	Retail and Service	6211	3	6	9
120	Amy Baughman Sew & Quilt	Retail and Service	12708	2	25	27
Total Shopping Center Parking						263

Required Parking = 245 Spaces

		WEEKDAY				WEEKEND		
USE	%	DAYTIME	%	EVENING	%	DAYTIME	%	EVENING
OFFICE	100	50	10	5	10	5	5	3
RETAIL	60	86	90	129	100	143	70	101
RESTAURANT	75	35	100	46	100	46	100	46
ENTERTAINMENT/REC	40	18	100	45	80	36	100	45
PERSONAL SERVICES	100	15	100	15	100	15	100	15
TOTALS		204		240		245		210

Drawing Index:

CS	COVER SHEET
1 of 2	ALTA / NSPS LAND TITLE SURVEY
2 of 2	ALTA / NSPS LAND TITLE SURVEY
C1.0	SITE PLAN
C1.A	SITE DETAILS
C1.1	GRADING PLAN
C1.2	STORMWATER / UTILITY DETAILS
C1.3	EROSION & SEDIMENTATION CONTROL PLAN
C1.4	EROSION & SEDIMENTATION CONTROL NOTES
D1.0	DEMOLITION PLAN
PH1.0	PHOTOMETRIC LIGHTING PLAN
U1.0	SITE UTILITY PLAN
TC1.0	TRAFFIC CIRCULATION PLAN

PARKING REQUIREMENTS

RETAIL SALES & SERVICE
PARKING STALL SIZE : REQUIRED: 10' x 18'
PROPOSED: 10' x 20'

RETAIL SALES & SERVICE
1 SPACE FOR EACH 250 SF OF GROSS FLOOR AREA
1 SPACE FOR EACH EMPLOYEE

6,816 SF ÷ 250 SF = 27.26 (28) STALLS
1 x 4 EMPLOYEES = 4 STALLS
TOTAL REQUIRED STALLS = 32
TOTAL PROPOSED STALLS = 27 *

LOADING SPACE: 14' x 65' SPACE REQUIRED
14' x 65' SPACE PROVIDED

* ADDITIONAL PARKING PROVIDED IN SHOPPING CENTER PLAZA.

LAND OWNER:

CREEKSIDE PLAZA, LLC
110 NORTH JEFFERSON STREET
ZELIENOPLE, PA 16063
(724) 473-0378
TOM RECTENWALD, OWNER

APPLICANT/DEVELOPER:

AUTOZONE DEVELOPMENT, LLC
PROPERTY MANAGEMENT DEPT. 8700
123 SOUTH FRONT STREET
MEMPHIS, TN 38103
(901) 495-8753
CASSANDRA PEELER, PRE-CONSTRUCTION SPECIALIST

ENGINEER:

MDM SURVEYORS & ENGINEERS, LLC
375 NORTHGATE DRIVE
WARRENDALE, PA 15086
(724) 934-2810
PAUL McCARTHY, PE, PA LIC. No. PE093350

SURVEYOR:

U.S. SURVEYOR, LLC
4929 RIVERWIND POINTE DRIVE
EVANSVILLE, IN 47715
800-867-8783 ext. 201
MICHAEL J. FIELDBUSCH, PLS, PA LIC. No. SU075632

FLOOD ZONE NOTE

This property is partially in Zone AE of the Flood Insurance Rate Map, Community Panel No. 42019C0367D, which has an effective date of 8/2/2018 and IS in a special Flood Hazard Area. Field surveying was not performed to determine this zone.

UTILITY SERVICE INFORMATION

ELECTRIC SERVICE
FIRST ENERGY
701 WEST NEW CASTLE STREET
ZELIENOPLE, PA 16063
O: (724) 453-3433
C: (330) 502-9013
DANIEL STEWART, ENGINEER
danstewart@firstenergycorp.com

SANITARY SEWER
WESTERN BUTLER COUNTY AUTHORITY
(724) 452-5501 ext 3
AUTUMN HECKATHORN
aheckathorn.wbca@zoominternet.net

TELEPHONE SERVICE
ARMSTRONG BUSINESS SOLUTIONS
C: (412) 287-9675
JASON GREW, BUSINESS DEVELOPMENT EXECUTIVE
jagrew@agoc.com

GAS SERVICE
PEOPLES GAS
375 NORTH SHORE DRIVE
PITTSBURGH, PA 15212
O: (412) 258-4430
C: (412) 523-6911
MICHAEL M. PAGANIE
michael.paganie@peoples-gas.com

STORMWATER
JACKSON TOWNSHIP
140 MAGILL ROAD
ZELIENOPLE, PA 16063
(724) 452-5581

WATER SERVICE
PENNSYLVANIA AMERICAN WATER COMPANY
2736 ELLWOOD ROAD
NEW CASTLE, PA 16101
O: (724) 654-3706
C: (724) 657-4327
WILLIAM LAGE, PROJECT MANAGER

ZONING INFORMATION

JACKSON TOWNSHIP
ZONING DISTRICT: MU (MIXED-USE DISTRICT)
THE RETAIL SALE OF AUTO PARTS IS A PERMITTED USE WITHIN THIS ZONING DISTRICT.

PROPOSED LAND USE ACTIVITY:
RETAIL

DESCRIPTION	REQUIRED	PROPOSED
MINIMUM LOT SIZE	1.5 ACRES	15.50 ACRES
MINIMUM LOT WIDTH @ STREET R.O.W. LINE	250 FT	1,034.31 FT
@ FRONT BLDG. SETBACK LINE	200 FT	1,004.80 FT
MINIMUM FRONT YARD SETBACK	40 FT	170'-3"
FROM COMMERCIAL SERVICE STREET	15 FT	N/A
MINIMUM SIDE YARD SETBACK	30 FT	30'-0"
ACCESSORY	15 FT	N/A
ABUTTING RESIDENTIAL	30 FT	N/A
MINIMUM REAR YARD SETBACK	50 FT	N/A
ACCESSORY	15 FT	N/A
MAXIMUM BUILDING HEIGHT	N/A	19'-0"
MAXIMUM LOT COVERAGE	50% (UP TO 80% - INCENTIVE ZONING)	TBD

NOTE:
ACCESS TO A STATE HIGHWAY SHALL ONLY BE AUTHORIZED BY A HIGHWAY OCCUPANCY PERMIT ISSUED BY THE PA DEPARTMENT OF TRANSPORTATION.

BUTLER COUNTY PLANNING COMMISSION REVIEW CERTIFICATE

REVIEWED BY THE BUTLER COUNTY PLANNING COMMISSION ON THIS 19 DAY OF February, 2025.

R. Henshaw MKG
SECRETARY

J. Hines MKG
CHAIRPERSON

Plan # 25014

PROOF OF RECORDING

RECORDED IN THE OFFICE OF THE RECORDER OF DEEDS OF BUTLER COUNTY, COMMONWEALTH OF PENNSYLVANIA, PLAN BOOK VOLUME 434, PAGE(S) 1-2.

GIVEN UNDER MY HAND AND SEAL THIS 28TH DAY OF OCTOBER, 2025.

Michele M. Mustello
RECORDER OF DEEDS

MICHELE M. MUSTELLO
RECORDER OF DEEDS
My Commission Expires First Monday In January 2028

OWNER'S ADOPTION AND DEDICATION

BY A RESOLUTION APPROVED ON THE 27 DAY OF August, 2025, THE BOARD OF DIRECTORS OF THE Creekside Plaza, LLC, (NAME OF CORPORATION), INCORPORATED IN THE STATE OF Pennsylvania, (NAME OF STATE), Tom Rectenwald (OWNER OR BENEFICIAL OWNERS) OF THE LAND SHOWN ON THE AutoZone (NAME OF PLAN) ADOPTED THIS PLAN AS ITS (PLAN OF LOTS OR LAND DEVELOPMENT) AND IRREVOCABLY DEDICATED ALL STREETS AND OTHER PROPERTY IDENTIFIED FOR DEDICATION ON THE PLAN TO JACKSON TOWNSHIP. THIS ADOPTION AND DEDICATION SHALL BE BINDING UPON THE CORPORATION AND UPON ITS SUCCESSORS AND ASSIGNS.

Creekside PLAZA, LLC.
NAME OF CORPORATION

CFO
SIGNATURE AND TITLE OF OFFICER WITNESSING

Managing Member
SIGNATURE AND TITLE OF AUTHORIZED OFFICER

8/27/2025
DATE

ACKNOWLEDGEMENT OF NOTARY PUBLIC

BEFORE ME, THE UNDERSIGNED NOTARY PUBLIC IN AND FOR THE COMMONWEALTH OF PENNSYLVANIA AND COUNTY OF Butler, PERSONALLY APPEARED Thomas Rectenwald Managing member (NAME AND TITLE OF OFFICER), OF THE Creekside Plaza LLC (NAME OF CORPORATION), WHO STATED THAT (HE/SHE) IS AUTHORIZED TO EXECUTE THE ABOVE ADOPTION AND DEDICATION ON BEHALF OF THE CORPORATION AND WAS PRESENT AT THE MEETING AT WHICH THE ACTION OF THE CORPORATION WAS TAKEN TO ADOPT THE PLAN AND DEDICATE PUBLIC PROPERTY CONTAINED THEREIN TO JACKSON TOWNSHIP.

WITNESS MY HAND AND NOTORIAL SEAL THIS 27th DAY OF August, 2025.

MY COMMISSION EXPIRES THE 1st DAY OF June, 2028.

NOTARY PUBLIC

Commonwealth of Pennsylvania - Notary Seal
Steven M. Koerper, Notary Public
Butler County
My commission expires June 1, 2028
Commission number 1298756
Member, Pennsylvania Association of Notaries

SURVEYOR'S CERTIFICATION

I HEREBY CERTIFY THAT, TO THE BEST OF MY INFORMATION, KNOWLEDGE AND BELIEF, THE SURVEY AND PLAN SHOWN HEREON ARE CORRECT AND ACCURATE TO THE STANDARDS REQUIRED BY THE ORDINANCES OF JACKSON TOWNSHIP.

08/25/2025
DATE

NAME

SU075632
REGISTRATION NUMBER

MICHAEL J FELDBUSCH
SU075632

ENGINEER'S CERTIFICATION

I HEREBY CERTIFY THAT, TO THE BEST OF MY INFORMATION, KNOWLEDGE AND BELIEF, THE PLAN SHOWN HEREON IS TRUE AND CORRECT TO THE ACCURACY AND ENGINEERING STANDARDS REQUIRED BY THE ORDINANCES OF JACKSON TOWNSHIP.

08-10-2025
DATE

Paul D. McCarthy
NAME

PE093350
REGISTRATION NUMBER

PAUL D MCCARTHY
PE093350

TOWNSHIP ENGINEER'S CERTIFICATION

THE TOWNSHIP ENGINEER MUST EXECUTE THE FOLLOWING CERTIFICATE INDICATING THAT THE PLAN HAS BEEN REVIEWED BY THE TOWNSHIP ENGINEER FOR CONFORMANCE WITH THE JACKSON TOWNSHIP SUBDIVISION AND LAND DEVELOPMENT ORDINANCE AND OTHER APPLICABLE TOWNSHIP ORDINANCES:

THIS PLAN WAS REVIEWED BY THE TOWNSHIP ENGINEER FOR CONFORMANCE WITH THE JACKSON TOWNSHIP SUBDIVISION AND LAND DEVELOPMENT ORDINANCE AND OTHER APPLICABLE TOWNSHIP ORDINANCES.

9/25/25
DATE

Benjamin L. Gilbert
NAME

PE 077527
REGISTRATION NUMBER

BENJAMIN L. GILBERT

MUNICIPAL PLANNING COMMISSION REVIEW CERTIFICATE

REVIEWED BY THE PLANNING COMMISSION OF JACKSON TOWNSHIP THIS 3rd DAY OF March, 2025.

Nikki Colton
~~SECRETARY~~ Planning Director

CHAIRPERSON

TOWNSHIP BOARD OF SUPERVISORS APPROVAL CERTIFICATE

WHEN APPROVED WITHOUT CONDITIONS:

APPROVED BY THE BOARD OF SUPERVISORS OF JACKSON TOWNSHIP ON THE 20th DAY OF March, 2025. THE BOARD OF JACKSON TOWNSHIP GIVES NOTICE THAT IN APPROVING THIS PLAN FOR RECORDING JACKSON TOWNSHIP ASSUMES NO OBLIGATION TO ACCEPT THE DEDICATION OF ANY STREETS, LAND OR PUBLIC FACILITIES AND HAS NO OBLIGATION TO IMPROVE OR MAINTAIN SUCH STREETS, LAND OR FACILITIES.

TOWNSHIP SECRETARY

CHAIRPERSON

® COPYRIGHT 2009

Owner / Developer:
AutoZone Development, LLC
123 South Front Street, 3rd Floor
Memphis, Tennessee 38103
Tel: (901) 495-8709 Fax: (901) 495-8969
For Bidding & Contractor Information Contact:
F.W. Dodge Plan Room Tel: (615) 884-1017

NORTH

PREPARED FOR: **AutoZone**
Store No.: 10051
100 PERRY HIGHWAY, HARMONY, PA 16037
JACKSON TOWNSHIP, BUTLER COUNTY
COMMONWEALTH OF PENNSYLVANIA

COVER SHEET

SCALE: AS NOTED

REVISIONS
1.
2.
3.
4.
5.
6.
7.
8.

DRAFTSMAN: CWT
CHECKED BY: CAD
DATE 11-11-2024
PROTOTYPE SIZE 65w2-L

PAUL D MCCARTHY
Electronically signed on 03-14-2025

CS

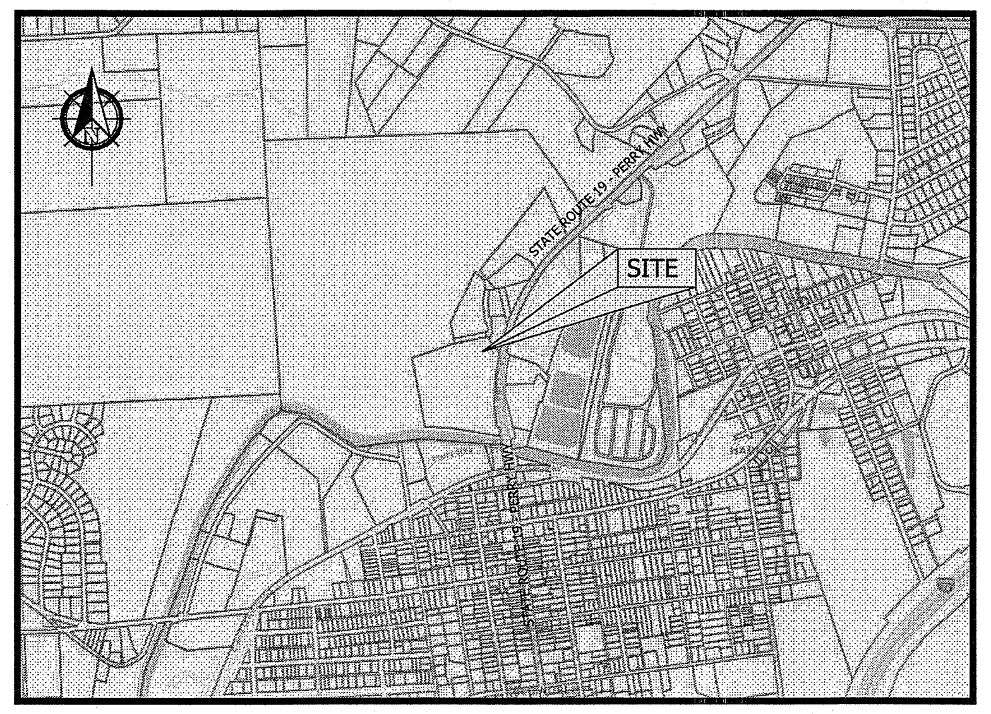

SITE LOCATION MAP
SCALE: 1" = 2,000'

CALL BEFORE YOU DIG !
PENNSYLVANIA LAW REQUIRES
3 WORKING DAYS NOTICE FOR
CONSTRUCTION PHASE AND 10 WORKING
DAYS IN DESIGN STAGE - STOP CALL
PENNSYLVANIA ONE CALL SYSTEM, INC.
1-800-242-1776

PARKING REQUIREMENTS

RETAIL SALES & SERVICE
PARKING STALL SIZE : REQUIRED: 10' x 18'
PROPOSED: 10' x 20'

RETAIL SALES & SERVICE
1 SPACE FOR EACH 250 SF OF GROSS FLOOR AREA
1 SPACE FOR EACH EMPLOYEE

6,816 SF ÷ 250 SF = 27.26 (28) STALLS
1 x 4 EMPLOYEES = 4 STALLS
TOTAL REQUIRED STALLS = 32
TOTAL PROPOSED STALLS = 27 *

LOADING SPACE: 14' x 65' SPACE REQUIRED
14' x 65' SPACE PROVIDED

* ADDITIONAL PARKING PROVIDED IN SHOPPING CENTER PLAZA.

ZONING INFORMATION

JACKSON TOWNSHIP
ZONING DISTRICT: MU (MIXED-USE DISTRICT)
THE RETAIL SALE OF AUTO PARTS IS A PERMITTED
USE WITHIN THIS ZONING DISTRICT.

PROPOSED LAND USE ACTIVITY:
RETAIL

DESCRIPTION	REQUIRED	PROPOSED
MINIMUM LOT SIZE	1.5 ACRES	15.50 ACRES
MINIMUM LOT WIDTH @ STREET R.O.W. LINE	250 FT	1,034.31 FT
@ FRONT BLDG. SETBACK LINE	200 FT	1,004.80 FT
MINIMUM FRONT YARD SETBACK	40 FT	170'-3"
FROM COMMERCIAL SERVICE STREET	15 FT	N/A
MINIMUM SIDE YARD SETBACK	30 FT	30'-0"
ACCESSORY	15 FT	N/A
ABUTTING RESIDENTIAL	30 FT	N/A
MINIMUM REAR YARD SETBACK	50 FT	N/A
ACCESSORY	15 FT	N/A
MAXIMUM BUILDING HEIGHT	N/A	19'-0"
MAXIMUM LOT COVERAGE	50% (UP TO 80% - INCENTIVE ZONING)	TBD

KEYNOTES

① PIPE GUARD - SEE DETAIL 11/C1.A.
② DUMPSTER LAYOUT - SEE DETAILS 13, 14, 15 & 16/C1.A.
③ SERVICE DOOR - SEE DETAIL 10/C1.A.
④ ASPHALT PAVING - SEE DETAIL 4/C1.A.
⑤ CONCRETE PAVING - SEE DETAIL 3/C1.A. EXPANSION AND CONTROL JOINTS - SEE DETAILS 21 & 22/C1.A. MAXIMUM SPACING FOR CONTROL JOINTS IS 15' O.C. EACH WAY.
⑥ ACCESSIBLE RAMP - SEE DETAILS 5 & 6/C1.A - MAX. SLOPE 1:12 (8.33%), MAX. CROSS SLOPE 1:50 (2.00%), TRUNCATED DOME TO BE A CONTRASTING COLOR.
⑦ NEW SAND-SLURRY SEALER. REPAIR/REPLACE ANY ASPHALT PAVEMENT NOT IN GOOD CONDITION OR BETTER.
ADD ALTERNATE No. 1:
PROVIDE ALTERNATE BID TO INSTALL NEW FULL-DEPTH ASPHALT PAVEMENT IN LIEU OF SEALER.
⑧ WHEEL STOP. SEE DETAIL 12/C1.A.
⑨ CONSTRUCT 6" WIDE CONCRETE CURB AGAINST BUILDING AT ACCESSIBLE RAMP.
⑩ FROST-PROOF YARD HYDRANT - SEE PLUMBING PLANS FOR DETAILS.
⑪ BOLLARD PLAN - SEE DETAIL 9/C1.A.
⑫ BARRIER-FREE PARKING SYMBOL - SEE DETAIL 7/C1.A.
⑬ 4" WIDE PARKING STRIPE PAINTED WHITE (TYP.).
⑭ 4" WIDE DIAGONAL STRIPES PAINTED WHITE AT 2 FT. O.C. STRIPES AT ACCESSIBLE PARKING TO BE BLUE - SEE DETAIL 6/C1.A.
⑮ ACCESSIBLE PARKING SIGN - SEE DETAIL 8/C1.A. G.C. TO PROVIDE ONE VAN ACCESSIBLE SIGN.
⑯ CONCRETE SIDEWALK - SEE DETAILS 20 & 23/C1.A FOR SIDEWALKS AROUND BUILDING.
⑰ 14' x 65' LOADING SPACE.
⑱ LIMIT OF NEW PAVEMENT.
⑲ FROST-DEPTH WALK AT DOOR, INSTALL FLUSH TO PAVEMENT. SEE DETAIL 19/C1.A.
⑳ EXISTING CONCRETE CURBING. REPAIR/REPLACE ANY FULL SECTIONS NOT IN GOOD CONDITION OR BETTER.
㉑ INSTALL NEW SEED, FERTILIZER AND MULCH AT LANDSCAPE AREA.
㉒ CONTRACTOR TO PRUNE AND TRIM EXISTING TREE, AND INSTALL NEW MULCH IN EXISTING LANDSCAPE AREA.
㉓ EXISTING LOT LIGHT TO REMAIN. RE-CIRCUIT FIXTURE TO EXISTING LOT LIGHTING SYSTEM FOR SHOPPING PLAZA.
㉔ GAS METER WITH TWO (2) 4"Ø STEEL BOLLARDS FILLED WITH CONCRETE, PAINTED YELLOW.
㉕ INSTALL NEW GUIDE RAIL ALONG SIDES OF TRASH CORRAL.

GENERAL CONSTRUCTION NOTES

1. ALL CONSTRUCTION SHALL COMPLY WITH LOCAL MUNICIPALITY AND COUNTY CODES AND STANDARDS. ALL CONSTRUCTION SHALL BE PERFORMED IN ACCORDANCE WITH ALL APPLICABLE OSHA, FEDERAL, STATE AND LOCAL REGULATIONS.
2. THE CONTRACTOR SHALL OBTAIN ALL NECESSARY CONSTRUCTION PERMITS REQUIRED TO PERFORM ALL THE WORK. THE CONTRACTOR SHALL POST ALL BONDS, PROVIDE PROOF OF INSURANCE AND PROVIDE TRAFFIC CONTROL NECESSARY FOR THIS WORK.
3. THE CONTRACTOR SHALL VERIFY ALL SITE CONDITIONS IN THE FIELD AND CONTACT THE OWNER IF THERE ARE ANY QUESTIONS OR CONFLICTS REGARDING THE CONSTRUCTION DOCUMENTS AND/OR FIELD CONDITIONS SO THAT APPROPRIATE REVISIONS CAN BE MADE PRIOR TO CONSTRUCTION. ANY CONFLICT BETWEEN DRAWINGS AND THE SPECIFICATIONS SHALL BE CONFIRMED WITH THE CONSTRUCTION MANAGER PRIOR TO BIDDING.
4. SHOULD ANY UNCHARTED, OR INCORRECTLY CHARTED, EXISTING PIPING OR OTHER UTILITY BE UNCOVERED DURING EXCAVATION, CONSULT THE ENGINEER AND THE ARCHITECT IMMEDIATELY BEFORE PROCEEDING FURTHER WITH THE WORK IN THIS AREA.
5. DO NOT INTERRUPT EXISTING UTILITIES SERVICING FACILITIES OCCUPIED AND USED BY THE OWNER OR OTHERS DURING OCCUPIED HOURS EXCEPT WHEN SUCH INTERRUPTIONS HAVE BEEN AUTHORIZED IN WRITING BY THE OWNER, LOCAL MUNICIPALITY AND/OR UTILITY COMPANY. INTERRUPTIONS SHALL ONLY OCCUR AFTER ACCEPTABLE TEMPORARY OR PERMANENT SERVICE HAS BEEN PROVIDED.
6. THE CONTRACTOR SHALL ABIDE BY ALL OSHA, FEDERAL, STATE AND LOCAL REGULATIONS WHEN OPERATING CRANES, BOOMS, HOISTS, ETC. IN CLOSE PROXIMITY TO OVERHEAD ELECTRIC LINES. IF CONTRACTOR MUST OPERATE EQUIPMENT CLOSE TO ELECTRIC LINES, CONTACT THE POWER COMPANY TO MAKE ARRANGEMENTS FOR PROPER SAFEGUARDS.
7. THE CONTRACTOR SHALL RESTORE ANY STRUCTURES, PIPE, UTILITY, PAVEMENT, CURBS, SIDEWALKS, LANDSCAPED AREAS, ETC. WITHIN THE SITE OR ADJOINING PROPERTIES DISTURBED DURING DEMOLITION OR CONSTRUCTION TO THEIR ORIGINAL CONDITION OR BETTER, AND TO THE SATISFACTION OF THE OWNER AND LOCAL MUNICIPALITY. ALL COSTS TO COMPLETE THIS WORK SHALL BE INCLUDED IN THE BASE BID FOR THIS PROJECT.
8. THE CONTRACTOR SHALL BE RESPONSIBLE TO INSTALL AND MAINTAIN TRAFFIC DEVICES FOR PROTECTION OF PEDESTRIANS AND VEHICLES CONSISTING OF DRUMS, BARRIERS, SIGNS, LIGHTS, FENCES AND UNIFORM TRAFFIC CONTROLLERS IN ACCORDANCE WITH THE STATE DEPARTMENT OF TRANSPORTATION OR AS REQUIRED OR DIRECTED BY THE SITE ENGINEER OR CONSTRUCTION MANAGER OR LOCAL GOVERNING AUTHORITIES. CONTRACTOR SHALL MAINTAIN ALL TRAFFIC LANES AND PEDESTRIAN WALKWAYS AT ALL TIMES UNLESS WRITTEN APPROVAL FROM THE DEPARTMENT OF TRANSPORTATION, LOCAL MUNICIPALITY, COUNTY, OR OTHER GOVERNING AUTHORITY IS RECEIVED.
9. THE CONTRACTOR SHALL NOTIFY THE ENGINEER SHOULD ANY DISCREPANCY REGARDING THE PROPOSED WORK OR UNFORESEEN CONDITIONS ARISE PRIOR TO PROCEEDING FURTHER WITH THE AFFECTED WORK.
10. THE CONTRACTOR SHALL PROVIDE AS-BUILT RECORDS OF ALL CONSTRUCTION (INCLUDING UNDERGROUND UTILITIES) TO THE OWNER AND THE ARCHITECT FOLLOWING COMPLETION OF CONSTRUCTION ACTIVITIES.
11. REFER TO DETAIL SHEETS FOR EROSION AND SEDIMENT CONTROL, STORM DRAINAGE, UTILITY, PAVING, CURBING, SIGNAGE, AND RETAINING WALL DETAILS AS APPLICABLE.
12. PAVEMENT MARKINGS SHALL BE IN ACCORDANCE WITH DEPARTMENT OF TRANSPORTATION GUIDELINES AND SHALL BE EITHER COLD LAID THERMOPLASTIC TAPE OR PAINTED AS DESIGNATED ON THE PLANS OR PAVEMENT MARKING DETAILS.
13. SITE DIMENSIONS ARE REFERENCED TO THE FACE OF CURBS OR EDGE OF PAVING UNLESS OTHERWISE NOTED. ALL BUILDING DIMENSIONS ARE REFERENCED TO THE OUTSIDE FACE OF THE STRUCTURE UNLESS OTHERWISE NOTED.
14. ALL PAVING MATERIALS FURNISHED AND WORK COMPLETED SHALL BE IN STRICT ACCORDANCE WITH THE STATE DEPARTMENT OF TRANSPORTATION GUIDELINES UNLESS OTHERWISE SPECIFIED.
15. THE CONTRACTOR IS RESPONSIBLE FOR THE REMOVAL AND DISPOSAL OF ALL RUBBISH, TRASH, DEBRIS, AND ORGANIC MATERIAL IN A LAWFUL MANNER.
16. THE CONTRACTOR SHALL BE RESPONSIBLE FOR VERIFYING ALL DIMENSIONS FOR BUILDING, WALLS, CONCRETE SLABS, AND UTILITY SERVICE POINT CONNECTIONS AND NOTIFYING THE OWNER AND ENGINEER OF ANY CONFLICTS OR DISCREPANCIES PRIOR TO CONSTRUCTION. THE CONTRACTOR SHALL REFERENCE BUILDING CONSTRUCTION PLANS FOR EXACT LOCATIONS OF ALL UTILITY CONNECTIONS TO BUILDINGS AND DOOR STEP LOCATIONS.
17. PIPE BOLLARDS SHALL BE INSTALLED IN TRAFFIC AND LOADING AREAS AS REQUIRED TO PROTECT BUILDING CORNERS, RECEIVING AREAS, HYDRANTS, TRANSFORMERS, METERS, GENERATORS, COMPACTORS, STEPS, AND RAILINGS, AS NECESSARY.
18. THE OWNER, AT THEIR DISCRETION, RESERVES THE RIGHT TO MODIFY THE DETAILS AND STANDARDS OF CONSTRUCTION FOR ALL PRIVATE FACILITIES FROM THAT INDICATED ON THE APPROVED PLAN, PROVIDED THAT THE ALTERNATE STANDARD COMPLIES WITH LOCAL CODE AND/OR UTILITY COMPANY REQUIREMENTS AND THE GENERAL DESIGN INTENT OF THE PROJECT IS NOT COMPROMISED.
19. THE CONTRACTOR SHALL SUBMIT SHOP DRAWINGS OF ALL PRODUCTS, MATERIALS AND PLAN SPECIFICATIONS TO THE OWNER AS REQUIRED FOR REVIEW AND APPROVAL, PRIOR TO FABRICATION OR DELIVERY TO THE SITE. ALLOW A MINIMUM OF 14 WORKING DAYS FOR REVIEW.
20. THE CONTRACTOR SHALL REFERENCE ARCHITECTURAL PLANS FOR EXACT DIMENSIONS AND CONSTRUCTION DETAILS OF THE BUILDING, ROOF DRAINS, AND CONCRETE SIDEWALKS.
21. TRAFFIC CONTROL SIGNAGE SHALL CONFORM TO THE STATE DEPARTMENT OF TRANSPORTATION STANDARD DETAIL SHEETS AND THE MANUAL ON UNIFORM TRAFFIC CONTROL DEVICES. SIGNS SHALL BE INSTALLED PLUMB.
22. INFORMATION ON EXISTING UTILITIES HAS BEEN COMPILED FROM AVAILABLE INFORMATION INCLUDING UTILITY COMPANY AND MUNICIPAL RECORD MAPS AND FIELD SURVEY AND IS NOT GUARANTEED CORRECT OR COMPLETE. UTILITIES ARE SHOWN TO ALERT THE CONTRACTOR TO THEIR PRESENCE AND THE CONTRACTOR IS SOLELY RESPONSIBLE FOR DETERMINING ACTUAL LOCATIONS AND ELEVATIONS OF ALL UTILITIES INCLUDING SERVICES. PRIOR TO DEMOLITION OR CONSTRUCTION, THE CONTRACTOR SHALL CONTACT THE PA ONE CALL SYSTEM WITHIN THREE (3) WORKING DAYS BEFORE COMMENCEMENT OF WORK AT 1-800-242-1776 AND VERIFY ALL LOCATIONS.
23. FIRE LANES SHALL BE ESTABLISHED AND PROPERLY DESIGNATED IN ACCORDANCE WITH THE LOCAL MUNICIPALITY AND LOCAL FIRE DEPARTMENT REQUIREMENTS.

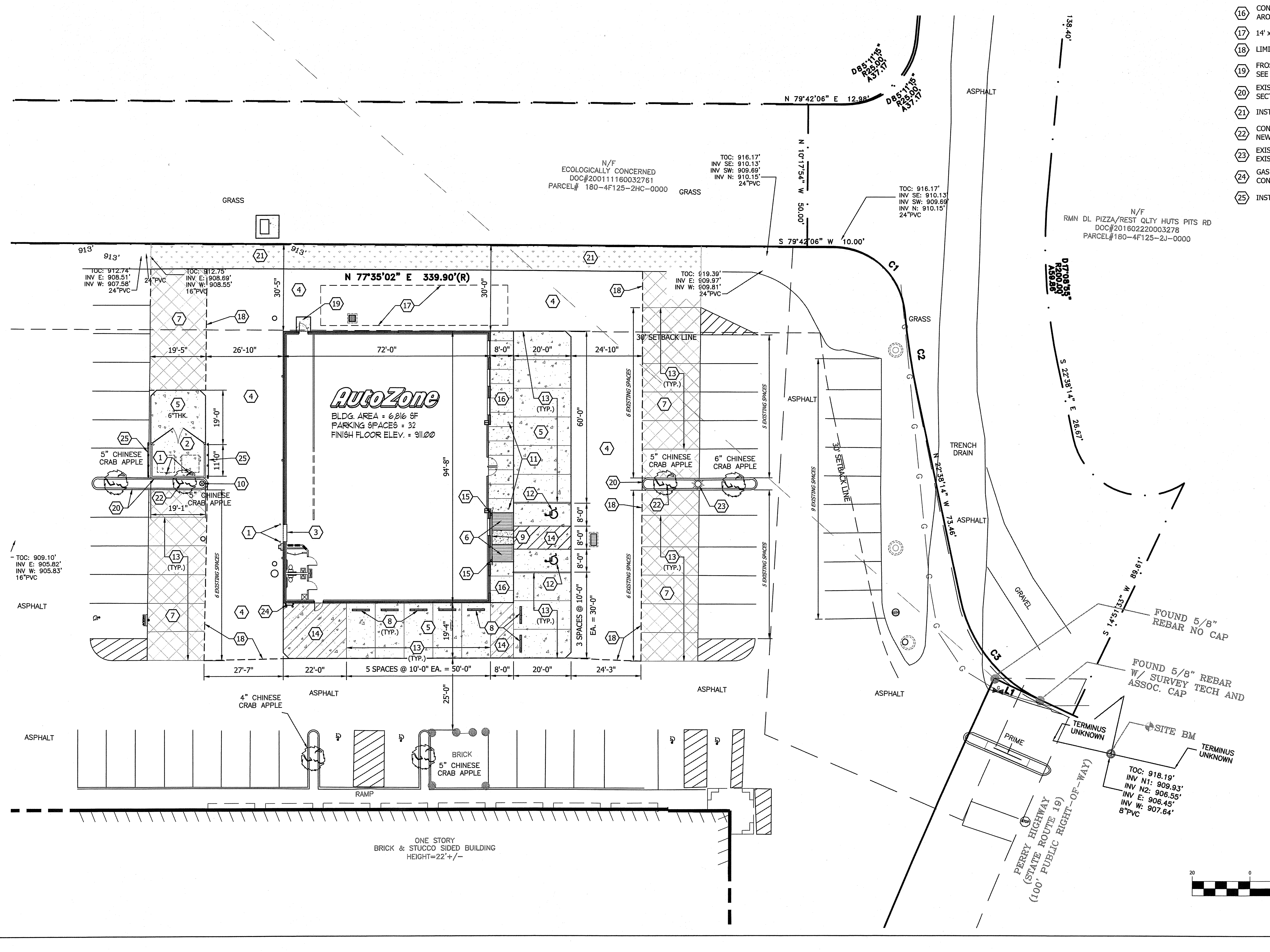
N/F
ECOLOGICALLY CONCERNED
DOC#200111160032761
PARCEL# 180-4F125-2HC-0000
GRASS
GRASS
N 79°42'06" E 12.98'
D85°11'15" R25.00' A37.17'
D85°11'15" R25.00' A37.17'
N 10°17'54" W 50.00'
S 79°42'06" W 10.00'
TOC: 916.17' INV SE: 910.13' INV SW: 909.69' INV N: 910.15' 24"PVC
TOC: 916.17' INV SE: 910.13' INV SW: 909.69' INV N: 910.15' 24"PVC
ASPHALT
138.40'
N/F
RMN DL PIZZA/REST QLTY HUTS PITS RD
DOC#201602220003278
PARCEL#180-4F125-2J-0000
D17°08'55" R200.00' A59.86'
S 22°38'14" E 26.67'
S 14°51'33" W 89.61'
N 22°38'14" W 73.46'
C1
C2
C3
L1
913'
913'
913'
TOC: 912.74' INV E: 908.51' INV W: 907.58' 24"PVC
24"PVC
TOC: 912.75' INV E: 908.69' INV W: 908.55' 16"PVC
TOC: 919.39' INV E: 909.97' INV W: 909.81' 24"PVC
N 77°35'02" E 339.90'(R)
30'-5"
30'-0"
30' SETBACK LINE
30' SETBACK LINE
19'-5"
26'-10"
72'-0"
8'-0"
20'-0"
24'-10"
AutoZone
BLDG. AREA = 6,816 SF
PARKING SPACES = 32
FINISH FLOOR ELEV. = 911.00
60'-0"
94'-8"
19'-0"
11'-0"
19'-1"
6"THK.
5" CHINESE CRAB APPLE
5" CHINESE CRAB APPLE
5" CHINESE CRAB APPLE
6" CHINESE CRAB APPLE
4" CHINESE CRAB APPLE
BRICK
5" CHINESE CRAB APPLE
(TYP.)
6 EXISTING SPACES
5 EXISTING SPACES
9 EXISTING SPACES
8'-0"
8'-0"
8'-0"
3 SPACES @ 10'-0" EA. = 30'-0"
19'-4"
27'-7"
22'-0"
5 SPACES @ 10'-0" EA. = 50'-0"
8'-0"
20'-0"
24'-3"
25'-0"
TOC: 909.10' INV E: 905.82' INV W: 905.83' 16"PVC
ASPHALT
GRASS
TRENCH DRAIN
GRAVEL
RAMP
ONE STORY
BRICK & STUCCO SIDED BUILDING
HEIGHT=22'+/-
FOUND 5/8" REBAR NO CAP
FOUND 5/8" REBAR W/ SURVEY TECH AND ASSOC. CAP
TERMINUS UNKNOWN
TERMINUS UNKNOWN
SITE BM
TOC: 918.19' INV N1: 909.93' INV N2: 906.55' INV E: 906.45' INV W: 907.64' 8"PVC
PRIME
PERRY HIGHWAY
(STATE ROUTE 19)
(100' PUBLIC RIGHT-OF-WAY)

PLAN BOOK	PAGE
434	2

GRAPHIC SCALE
20 0 10 20 40 80
(IN FEET)
1 inch = 20 ft.

© COPYRIGHT 2009

Owner / Developer:
AutoZone Development, LLC
123 South Front Street, 3rd Floor
Memphis, Tennessee 38103
Tel: (901) 495-8709 Fax: (901) 495-8969
For Bidding & Contractor Information Contact:
F.W. Dodge Plan Room Tel: (615) 884-1017

PREPARED FOR: **AutoZone**
Store No.: 10051
100 PERRY HIGHWAY, HARMONY, PA 16037
JACKSON TOWNSHIP, BUTLER COUNTY
COMMONWEALTH OF PENNSYLVANIA

SITE PLAN

SCALE: 1" = 20'-0"

REVISIONS
1.
2.
3.
4.
5.
6.
7.
8.

DRAFTSMAN: CWT
CHECKED BY: CAD
DATE
11-11-2024
PROTOTYPE SIZE
65w2-L

PAUL D. McCARTHY
PE093350

Electronically signed on 03-14-2025

C1.0

Instr: 202510290017976
Pgs: 1 F: $45.00 10/29/2025 2:20 PM
Michele Mustello T20250015093
Butler County Recorder PA

SITE LOCATION MAP

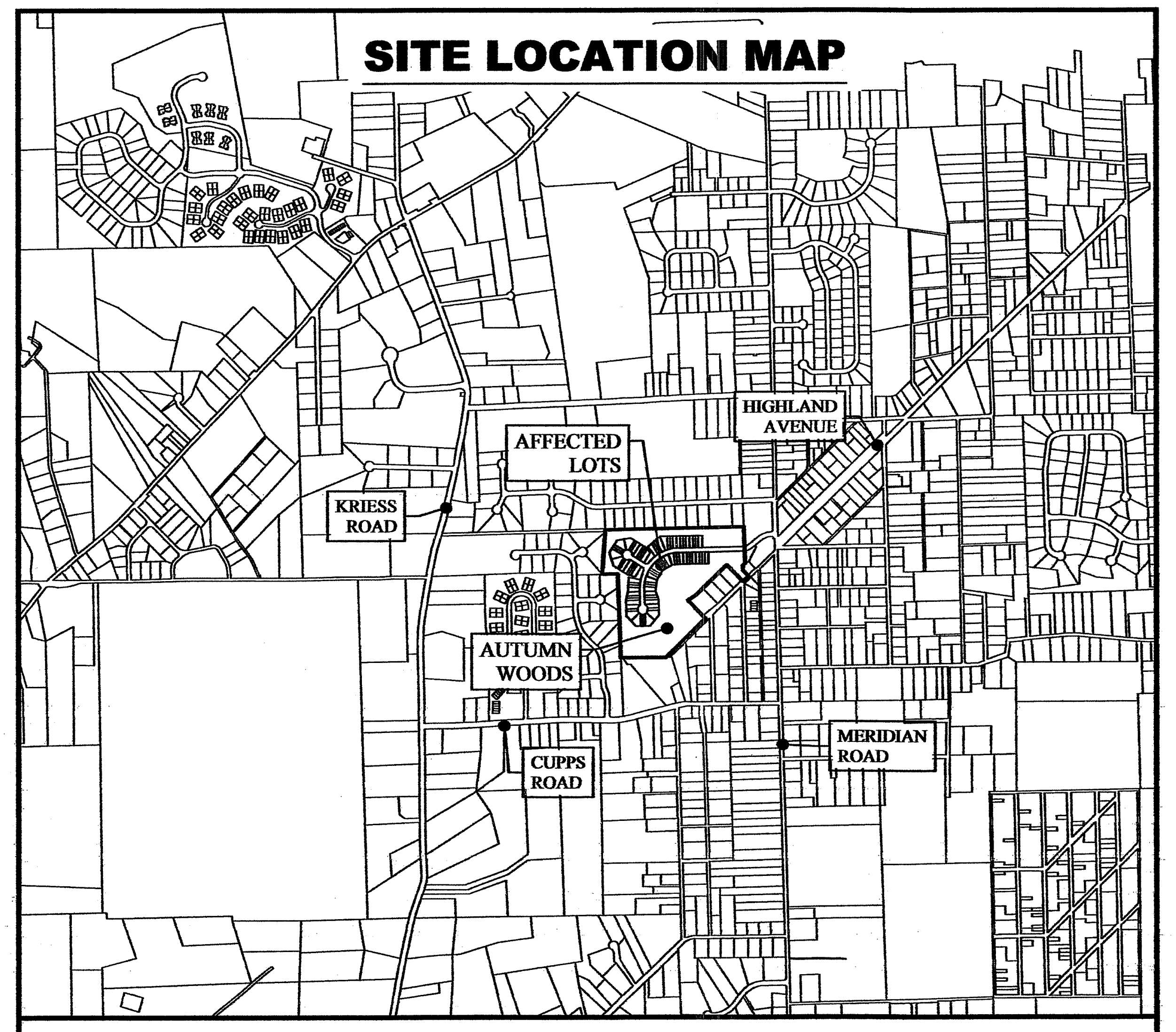
AFFECTED LOTS
HIGHLAND AVENUE
KRIESS ROAD
AUTUMN WOODS
CUPPS ROAD
MERIDIAN ROAD

Butler County
GIS Mapping

SCALE: 1"= 1500'

Site Data Chart (Overall) - From Original Plan	
ZONING DISTRICT CLASSIFICATION	R-1 - SINGLE FAMILY RESIDENTIAL
TOTAL GROSS PROPERTY AREA	1,637,121.15 SF. (37.58 AC.)
PROPOSED AREA IN DEVELOPMENT LOTS	1,522,055.14 SF. (34.94 AC.)
PROPOSED PUBLIC STREET R/W AREA	115,066.01 SF. (2.64 AC.)
PROPOSED LAND USE	CLUSTER DEVELOPMENT
PROPOSED DEVELOPMENT DENSITY	92 UNITS / 2.8 DU/AC.
PROPOSED FRONT YARD SETBACK	25 FT. MIN. (CLUSTER)
PROPOSED SIDE YARD SETBACK TO EXISTING PROPERTY LINE NOT IN CLUSTER	25 FT. MIN. (CLUSTER)
PROPOSED SIDE YARD SETBACK	20 FT. MIN. BETWEEN BUILDINGS
PROPOSED REAR YARD SETBACK	25 FT. MIN. (CLUSTER)
PROPOSED BUILDING HEIGHT	40' MAX
PROPOSED IMPERVIOUS LOT COVERAGE	25% MAX.

Original Parcels

Unit No.	Area (Sq.Ft.)	Area (Acres)	Tax Parcel #	Street Address
214A	5,262.218	0.121	054-33-G214A	504 Cherry Tree
214B	3,476.855	0.080	054-33-G214B	503 Cherry Tree
214C	3,476.855	0.080	054-33-G214C	502 Cherry Tree
214D	5,205.686	0.120	054-33-G214D	501 Cherry Tree
215A	5,205.686	0.120	054-33-G215A	404 Cherry Tree
215B	3,476.855	0.080	054-33-G215B	403 Cherry Tree
215C	3,476.855	0.080	054-33-G215C	402 Cherry Tree
215D	5,262.218	0.121	054-33-G215D	401 Cherry Tree

Revised Parcels

Unit No.	Area (Sq.Ft.)	Area (Acres)
214A-R	4,752.606	0.109
214B-R	2,972.910	0.068
214C-R	2,988.939	0.069
214D-R	6,707.160	0.154
215A-R	5,518.042	0.127
215B-R	2,981.182	0.068
215C-R	2,983.446	0.068
215D-R	5,938.944	0.136

Plan Notes:

Property Owner:

D.R. Horton, Inc. – New Jersey
1603 Carmody Court, Suite 300
Sewickley, PA 15143
412-218-4384

Property Reference:

Lot 214A through Lot 214D
Lot 215A through Lot 215D

Instrument No. 202507090010555

Revision to Autumn Woods Revised Plan of Subdivision No. 2
Plan Book 420, Pages 33 through 35

Affected tax parcel numbers and street addresses can be found in the table above.

Plan Purpose:

The intent of this plan is to revise the existing lots listed above to modify their widths to accommodate a different size of townhome unit. The original plan was recorded with 28-foot-wide townhome units. 24-foot-wide units are proposed by this plan.

General Notes:

The utility services installed for the prior unit configuration have been determined to accommodate this revision. No changes to utility services or mains are required.

All easements shown on this plan are existing and shown per the previously recorded subdivision plans.

This plan only modifies the interior lot lines of the proposed buildings. No additional units are being added beyond what was originally planned for.

This plan is subject to any and all covenants, conditions, easements and restrictions of the previously approved plan and those of record.

Lot lines with the label (NR) are non-radial to the intersecting right of way line.

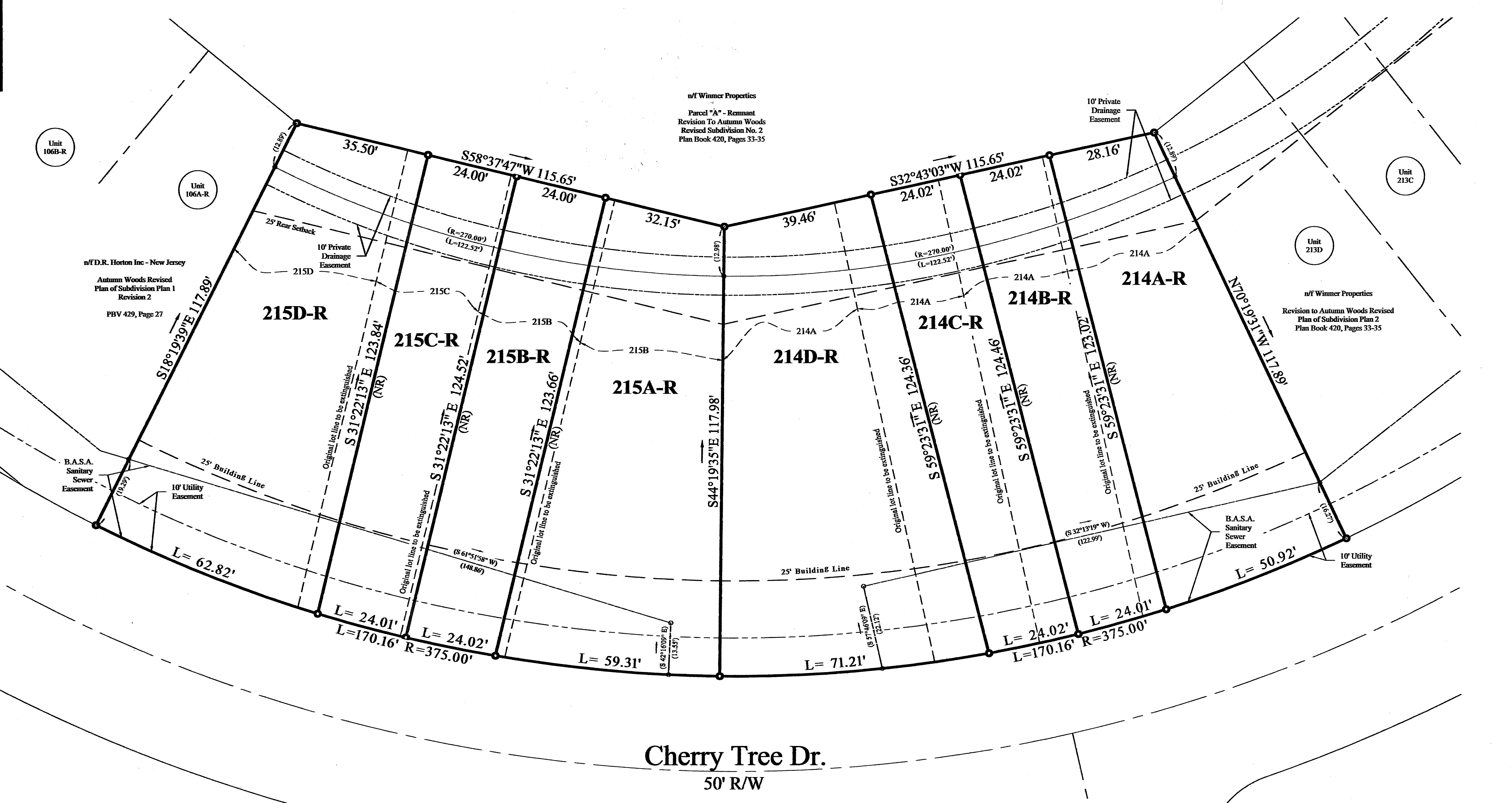
n/f Winmer Properties
Parcel "A" - Remnant
Revision To Autumn Woods
Revised Subdivision No. 2
Plan Book 420, Pages 33-35
Unit 106B-R
Unit 106A-R
n/f D.R. Horton Inc - New Jersey
Autumn Woods Revised
Plan of Subdivision Plan 1
Revision 2
PBV 429, Page 27
35.50'
S58°37'47"W 115.65'
24.00'
24.00'
32.15'
39.46'
S32°43'03"W 115.65'
24.02'
24.02'
28.16'
(12.89')
(12.98')
(12.89')
25' Rear Setback
10' Private Drainage Easement
(R=270.00')
(L=122.52')
215D
215C
215B
215B
214A
214A
214A
214A
215D-R
215C-R
215B-R
215A-R
214D-R
214C-R
214B-R
214A-R
S18°19'39"E 117.89'
S 31°22'13" E 123.84' (NR)
S 31°22'13" E 124.52' (NR)
S 31°22'13" E 123.66' (NR)
S44°19'35"E 117.98'
S 59°23'31" E 124.36' (NR)
S 59°23'31" E 124.46' (NR)
S 59°23'31" E 123.02' (NR)
N70°19'13"W 117.89'
Original lot line to be extinguished
Unit 213C
Unit 213D
n/f Winmer Properties
Revision to Autumn Woods Revised
Plan of Subdivision Plan 2
Plan Book 420, Pages 33-35
B.A.S.A. Sanitary Sewer Easement
10' Utility Easement
(19.29')
(16.27')
25' Building Line
(S 61°51'58" W)
(148.86')
(S 32°13'19" W)
(122.99')
(S 42°16'09" E)
(13.55')
(S 57°46'09" E)
(22.12')
L= 62.82'
L= 24.01'
L=170.16'
R=375.00'
L= 24.02'
L= 59.31'
L= 71.21'
L= 24.02'
L=170.16'
R=375.00'
L= 24.01'
L= 50.92'
Cherry Tree Dr.
50' R/W

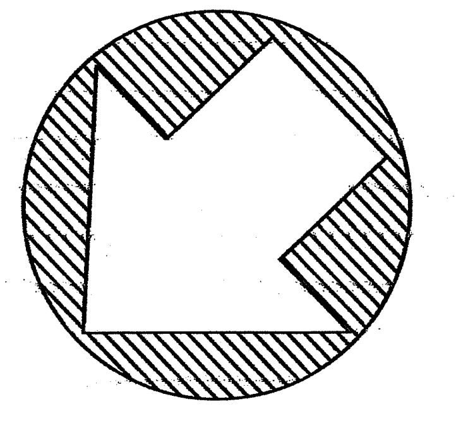

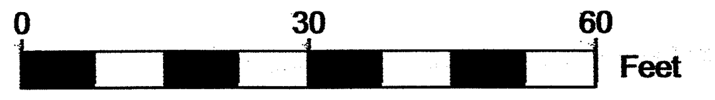

PLAN BOOK	PAGE
434	3

REGISTERED SURVEYOR

JAMES ANTHONY SPERDUTE
No.SU024457E

BUTLER TOWNSHIP
PLANNING COMMISSION

BUTLER TOWNSHIP
BOARD OF COMMISSIONERS

BUTLER COUNTY
PLANNING COMMISSION

BUTLER COUNTY
RECORDER OF DEEDS

Know all men by these Presents, That D.R.HORTON INC, - NEW JERSEY, a corporation duly registered under the laws of the Commonwealth of Pennsylvania, of the Township of Butler, County of Butler and State of Pennsylvania, for ourselves, our heirs, executors, administrators and assigns, does hereby adapt this Plan for its property situate in Butler Township and does hereby dedicate forever for public use for highway and utility purposes, all drives, roads, lanes, ways, right-of-way and other public highways shown upon the plan, and we release, remise and discharge the Township of Butler, its successor or assigns, of and from all liability, courses of action, claims or damages arising from or pertaining to in any manner said roads, and rights-of-way.

We further agree that said plan is approved by the Township of Butler for "Planning Purposes Only" and that said Township shall not issue any "Building Permits" for lots contained herein, nor shall any lots be deeded until either all of said roads and improvements in accordance with Butler Township Ordinance ____ and all other applicable ordinances have been completed and accepted by said Township or until the Township has approved a bond with sufficient surety to guarantee construction of the same. In Witness Whereof, I hereunto set our hand and seal this 7th day of October, 20 25

COMMONWEALTH OF PENNSYLVANIA)
)SS
COUNTY OF Allegheny)

Before me, the subscriber, a Notary Public in and for said Commonwealth and County personally appeared Lori Sue Deal of the D.R.HORTON, INC – NEW JERSEY a Corporation, who being duly sworn, deposeth and saith that he/she was personally present at the execution of the adoption, release and dedication and saw the common and corporate seal duly affixed and that the above release and dedication was duly signed and sealed by and as for the act and deed of the said D.R.HORTON, INC – NEW JERSEY for the uses and purposes thereinmentioned and that the name of this deponent subscribed to the said release and dedication as Assistant Secretary of said corporation, in attestation of the due execution and delivery of said release and dedication is this deponent's own and proper and respective handwriting.

LORI SUE DEAL - ASSISTANT SECRETARY
Printed Name & Title of Officer

Lori Sue Deal
Signature

Sworn and subscribed before me this day.

WITNESS MY HAND AND NOTARIAL SEAL this 7th day of October 20 25 .

My Commission Expires the 28th day of August 20 27 .

SEAL

Commonwealth of Pennsylvania - Notary Seal
DAVID BERECK - Notary Public
Allegheny County
My Commission Expires August 28, 2027
Commission Number 1438332

Notary Public

D.R. Horton Inc., - New Jersey, owners of the land on the Autumn Woods Revised Plan of Subdivision Plan 2 – Revision 1 plan do hereby certify that the title to this property is in the name of D.R. Horton, Inc., - New Jersey as recorded at Instrument No 202507090010555.

Witness

Lori Sue Deal
Authorized Signature

I, James A. Sperdute, a Registered Surveyor of the Commonwealth of Pennsylvania, do hereby certify that the plan as shown hereon is based upon actual field survey of the land described and that all angles, distances and courses are correctly shown, that the monuments and markers have been set as shown on the plat, and that this plan correctly represents the lots, land, streets and highways as surveyed and plotted by me for the owners or agents.

10-6-2025
Date

James A. Sperdute, RS # 24457-E

Reviewed by the Butler Township Planning Commission this 7 day of OCTOBER 20 25.

F. Marks JCH
Secretary

R. Hensler JCH
President, Planning Commission

The Board of Commissioners of the Township of Butler hereby gives public notice that in approving this plan for recording purposes only, the Township assumes no obligations, legal or otherwise, expresses or implied either to accept said streets as Township streets or roads or grade, pave and curb the streets in said plan, or to construct sewers therein or to install any other such service ordinarily installed in Township streets or roads.

Theresa Giesler
Secretary

James Lokhaus Jr.
Chairperson, Board of Supervisors

Approved by the Butler Township Board of Commissioners this 20 day of OCTOBER 20 25.

Theresa Giesler
Secretary

James Lokhaus Jr.
Chairperson, Board of Commissioners

Reviewed by the Butler County Planning Commission this 17 day of SEPTEMBER 20 25 .

Secretary

Chairperson/Planning Commission

PLAN # 25193

Commonwealth of Pennsylvania)
)SS
County of Butler)

Recorded in the Recorders Office for the recording of deeds, plans, etc., in Butler County in Plan Book 434 , Page 3 .

Given under my hand and seal this 29TH day of October 20 25 .

SEAL

Michele M. Mustello
Recorder of Deeds

MICHELE M. MUSTELLO
RECORDER OF DEEDS

My Commission Expires First Monday in January 2028

Date:	Revisions	By:
09/04/2025	Per Township Engineer Review	JSS

Prepared By:

Sperdute Land Surveying
A Division of Sheffler & Company
441 Mars-Valencia Road, Suite 3C
Valencia, PA 16059

108 Deer Lane
Harmony, PA 16037

1712 Mount Nebo Road
Sewickley, PA 15143

Office Phone: 724-452-4362
Email: Info@SperduteSurveying.com

Autumn Woods
Revised Plan of Subdivision Plan 2 - Revision 1

Prepared For:
D.R. Horton, Inc. - New Jersey

Situate In:
Butler Township, Butler County, Pennsylvania

Being a Revision to Lots 214A through 214D and
Lots 215A through 215D
of the Revision to Autumn Woods Plan of Subdivision Plan 2
Plan Book 420, Pages 33-35

DRAWING SCALE: 1"=30'	DESIGNED BY: JSS
DATE ISSUED: August 20, 2025	REVIEWED BY: JAS
PROJECT JOB#: 1021-2527752	

Client:
D.R. Horton, Inc. - New Jersey

Sheet No.
1 of 1

Plantations I - PCSM As-Built

Situated In

Lancaster Township

Butler County

Prepared For

Brennan Builders, Inc

Instr: 202510310018159
Pgs: 7 F: $285.00 10/31/2025 11:42 AM
T20250015236
Michele Mustello
Butler County Recorder PA

LOCATION MAP SCALE = NTS Evans City Quad Map

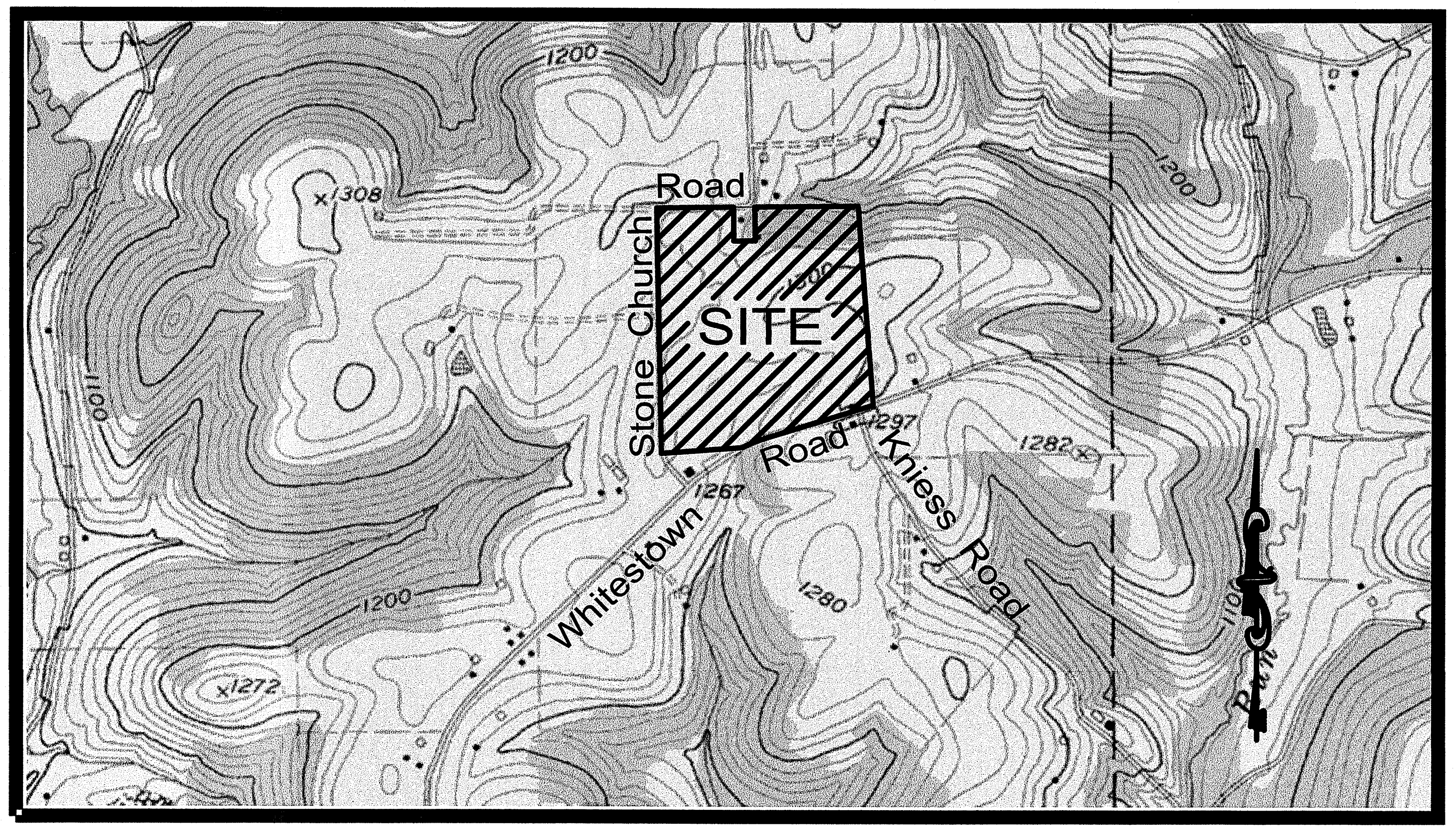

As-Built.1	***As-Built Storm Sewer Plan***
As-Built.2	***As-Built Storm Sewer Plan***
As-Built.3	***As-Built Storm Sewer Plan***
As-Built.4	***As-Built Storm Sewer Plan***
As-Built.Prof	***As-Built Storm Sewer Profiles***
As-Built.Det	***As-Built Storm Sewer Details***

PROOF OF RECORDING

RECORDER IN THE OFFICE FRO THE RECORDING OF DEEDS, PLATS, ETC., IN THE COUNTY OF BUTLER,
IN PLAN BOOK VOLUME 434 PAGE(S) 4-10.

GIVEN UNDER MY HAND AND SEAL
THIS 31st DAY OF OCTOBER, 2025.

Michele M. Mustello
RECORDER OF DEEDS

MICHELE M. MUSTELLO
RECORDER OF DEEDS

My Commission Expires First Monday In January 2028

PROFESSIONAL ENGINEER STATEMENT

I, MATTHEW B. SCHMIDT, HEREBY CERTIFY THAT THE STORMWATER MANAGEMENT PLAN MEETS ALL DESIGN STANDARDS AND CRITERIA OF LANCASTER TOWNSHIP'S STORMWATER MANAGEMENT ORDINANCE.

10-31-25
DATE

Matthew B. Schmidt
SIGNATURE

NO. PE079144
REGISTRATION NO.

COMMONWEALTH OF PENNSYLVANIA:
COUNTY OF Allegheny:

ON THIS, THE 31 DAY OF October, 2025, BEFORE ME A NOTARY PUBLIC,

PERSONALLY APPEARED MATTHEW B. SCHMIDT, KNOW TO ME OR SATISFACTORILY PROVEN TO BE THE PERSON WHOSE NAME IS SUBSCRIBED TO BE WITHIN INSTRUMENT, AND ACKNOWLEDGED THAT HE/SHE EXECUTED THE SAME FOR THE PURPOSES THEREIN CONTAINED.

IN WITNESS WHEREOF, I HEREUNTO SET MY HAND AND OFFICIAL SEAL

Commonwealth of Pennsylvania - Notary Seal
THOMAS SHEPPARD - Notary Public
Allegheny County
My Commission Expires April 15, 2026
Commission Number 1419552

Thomas Sheppard
NOTARY PUBLIC

MATTHEW B. SCHMIDT
No. PE079144

PLAN BOOK	PAGE
434	4

☐ Corporate Office
Etna Technical Center
35 Wilson Street, #201
Pittsburgh, PA 15223
PHONE: (412) 781-9660
FAX: (412) 781-5904
www.Hampton-Technical.com

HAMPTON
TECHNICAL ASSOCIATES, INC.
ENGINEERING LAND SURVEYORS
Established 1960

☒ Mars Office
123 Ridge Rd
Suite B
Valencia, PA 16059
PHONE: (724) 625-4544
FAX: (724) 625-4549
www.Hampton-Technical.com

PROJECT #: 22-6315-1

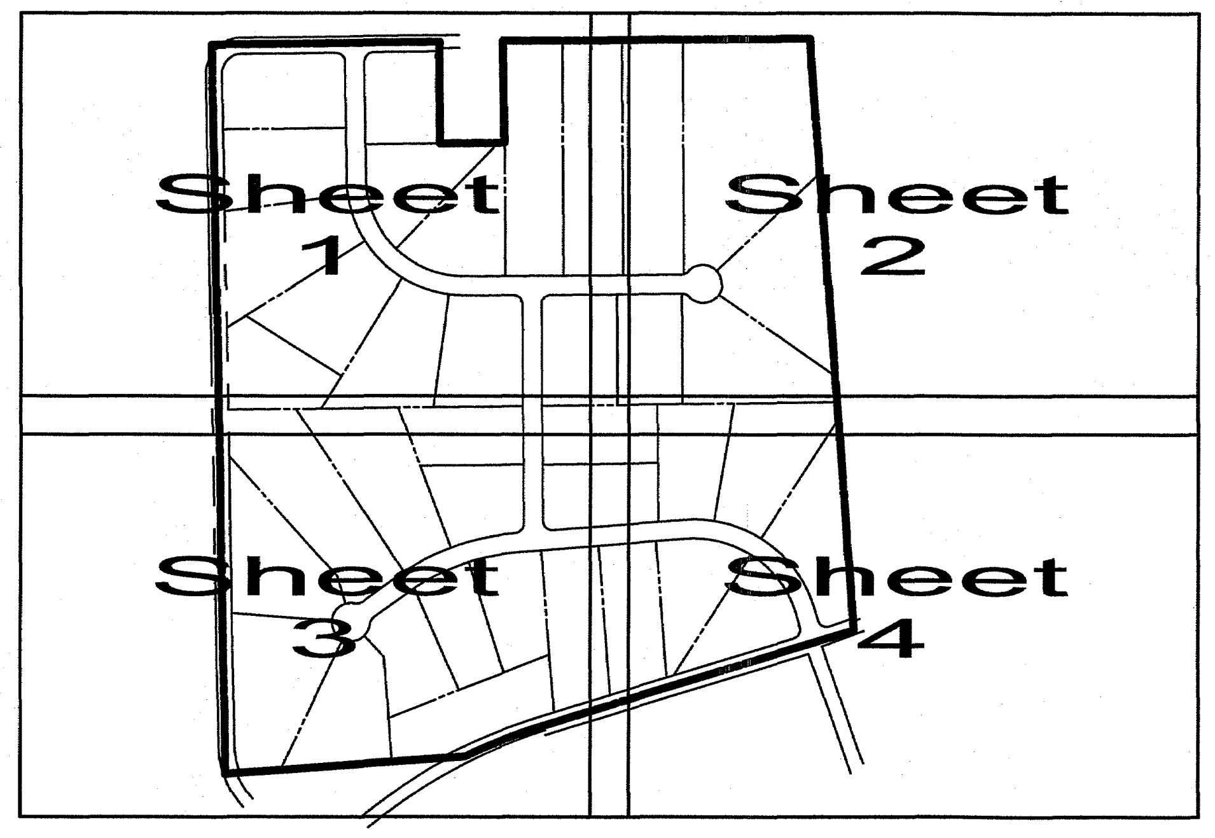
Sheet 1
Sheet 2
Sheet 3
Sheet 4

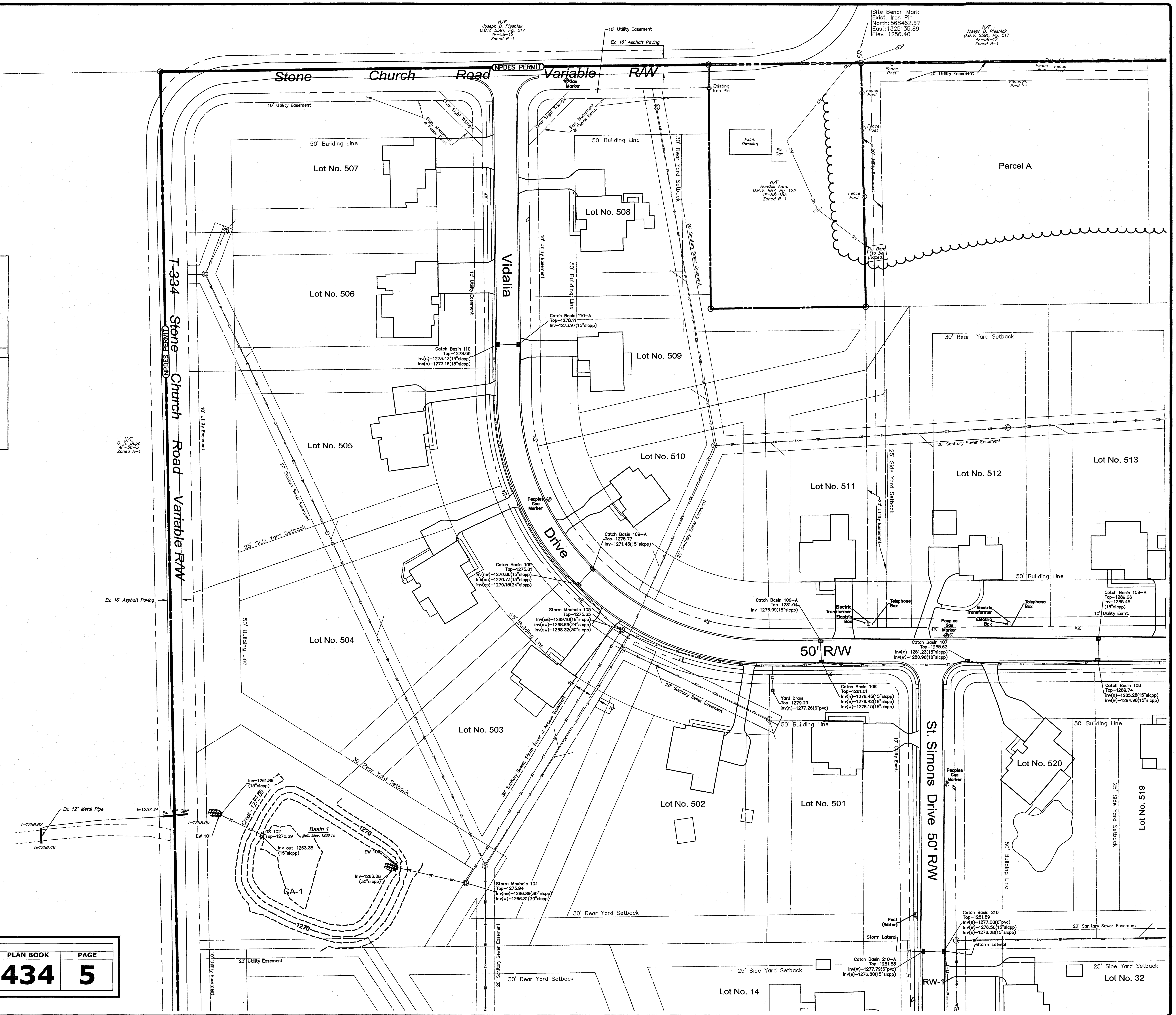
North
N/F
Joseph D. Plesniak
D.B.V. 2591, Pg. 517
4F-58-12
Zoned R-1
10' Utility Easement
Ex. 16' Asphalt Paving
Stone Church Road NPDES PERMIT Variable R/W
Gas Marker
Site Bench Mark
Exist. Iron Pin
North: 568462.67
East: 1325135.89
Elev. 1256.40
Ex. I.P.
Existing Iron Pin
Fence Post
20' Utility Easement
Clear Sight Triangle
Sign, Monument & Fence Esmt.
50' Building Line
30' Rear Yard Setback
Exist. Dwelling
Ex. Gar.
N/F
Randall Anno
D.B.V. 987, Pg. 122
4F-58-15A
Zoned R-1
OH
Parcel A
Ex. Barn (to be Razed)
Lot No. 507
Lot No. 508
Lot No. 506
Lot No. 509
Lot No. 505
Lot No. 510
Lot No. 511
Lot No. 512
Lot No. 513
Lot No. 504
Lot No. 503
Lot No. 502
Lot No. 501
Lot No. 520
Lot No. 519
Lot No. 14
Lot No. 32
Vidalia Drive
T-334 Stone Church Road Variable R/W
NPDES PERMIT
N/F
C. R. Bupp
4F-56-3
Zoned R-1
10' Utility Easement
20' Sanitary Sewer Easement
20' Sanitary Sewer Easement
25' Side Yard Setback
50' Building Line
Catch Basin 110-A
Top-1278.11
Inv-1273.97(15"slcpp)
Catch Basin 110
Top-1278.09
Inv(e)-1273.43(15"slcpp)
Inv(s)-1273.16(15"slcpp)
Peoples Gas Marker
Catch Basin 109-A
Top-1275.77
Inv-1271.43(15"slcpp)
Catch Basin 109
Top-1275.81
Inv(nw)-1270.80(15"slcpp)
Inv(ne)-1270.73(15"slcpp)
Inv(se)-1270.15(24"slcpp)
Storm Manhole 105
Top-1275.65
Inv(se)-1269.10(18"slcpp)
Inv(nw)-1268.69(24"slcpp)
Inv(sw)-1268.32(30"slcpp)
65' Building Line
Ex. 16' Asphalt Paving
20' Sanitary Sewer Easement
30' Sanitary Sewer, Storm Sewer & Access Easement
30' Rear Yard Setback
25' Side Yard Setback
20' Utility Easement
20' Sanitary Sewer Easement
Catch Basin 106-A
Top-1281.04
Inv-1276.99(15"slcpp)
Electric Transformer
Electric Box
Telephone Box
Peoples Gas Marker
Electric Transformer
Electric Box
Telephone Box
Catch Basin 108-A
Top-1289.66
Inv-1285.45
(15"slcpp)
10' Utility Esmt.
50' R/W
Catch Basin 107
Top-1285.63
Inv(e)-1281.23(15"slcpp)
Inv(w)-1280.98(18"slcpp)
Yard Drain
Top-1279.29
Inv(n)-1277.26(6"pvc)
Catch Basin 106
Top-1281.01
Inv(n)-1276.45(15"slcpp)
Inv(e)-1276.42(18"slcpp)
Inv(w)-1276.15(18"slcpp)
Catch Basin 108
Top-1289.74
Inv(n)-1285.28(15"slcpp)
Inv(w)-1284.98(15"slcpp)
50' Building Line
10' Utility Esmt.
St. Simons Drive 50' R/W
Peoples Gas Marker
25' Side Yard Setback
Ex. 12" Metal Pipe
I=1256.62
I=1256.46
I=1257.34
Ex. 15" CMP
I=1258.05
EW 101
Inv-1261.89
(15"slcpp)
Crest - 1272.00
OS 102
Top-1270.29
Inv out-1263.38
(15"slcpp)
Basin 1
Btm. Elev. 1263.75
1270
EW 103
Inv-1266.28
(30"slcpp)
CA-1
Storm Manhole 104
Top-1275.94
Inv(ne)-1266.86(30"slcpp)
Inv(w)-1266.81(30"slcpp)
30' Rear Yard Setback
20' Sanitary Sewer Easement
10' Utility Easement
20' Utility Easement
30' Rear Yard Setback
Post (Water)
Storm Lateral
Catch Basin 210-A
Top-1281.83
Inv(w)-1277.79(6"pvc)
Inv(e)-1276.80(15"slcpp)
Catch Basin 210
Top-1281.89
Inv(e)-1277.00(6"pvc)
Inv(w)-1276.50(15"slcpp)
Inv(s)-1276.28(15"slcpp)
Storm Lateral
RW-1
20' Sanitary Sewer Easement
25' Side Yard Setback
ST
SN

NOTES:
1. THIS DRAWING REPRESENTS UTILITY AS-BUILT INFORMATION ONLY.
2. SANITARY SEWER LATERALS SHOWN ARE APPROXIMATE LOCATION AND SHOULD BE FIELD VERIFIED.
3. ALL DISTURBED AREAS NOT DESIGNATED AS MEADOW OR IMPERVIOUS COVER SHALL BE CONSIDERED OPEN SPACE.

Plantations 1

Owner ~ Developer : Brennan Builders, Inc.

Number of Lots	39 Lots
Minimum Lot Size	0.9329 ac.
Maximum Lot Size	3.6807 ac.
Total Site Acerage	64.0660 ac.
Total Lineal Feet of New Roadway	3521.30 feet

Site Data

R-1 Zoning Requirements

Minimum Lot Size	40,000 sq. ft.
Minimum Lot Width @ Building Line	150 feet
Minimum Front Yard Setback	50 feet
Minimum Side Yard Setback	25 feet
Minimum Rear Yard Setback	30 feet

Owner ~ Developer
Brennan Builders, Inc.
800 S. Washington Street
Evans City, PA 16033

GRAPHIC SCALE

50 0 25 50 100 200

(IN FEET)
1 inch = 50 ft.

PLAN BOOK	PAGE
434	5

MATTHEW B. SCHMIDT
ENGINEER
No. PE079144

HAMPTON
TECHNICAL ASSOCIATES, INC.
ENGINEERING LAND SURVEYORS
ESTABLISHED 1960
www.Hampton-Technical.com
email@hampton-technical.com

☐ Corporate Office
Etna Technical Center
35 Wilson Street, Suite 201
Pittsburgh, PA 15223
PHONE: (412) 781-9660
FAX: (412) 781-5904

☒ Mars Office
123 Ridge Road, Suite B
Valencia, PA 16059
PHONE: (724) 625-4544
FAX: (724) 625-4549

DRAWN BY:	JCC
CHECKED BY:	SRF
APPROVED BY:	MBS
CAD FILE:	22-6315-1 As-built

TITLE
The Plantations 1
Storm Sewer As-Builts
Lancaster Township
Butler County, Pennsylvania

CLIENT
Brennan Builders, Inc.
800 S. Washington Street
Evans City, PA 16033

DATE ISSUED:	2023-10-05
HORIZONTAL SCALE:	1"=50'
VERTICAL SCALE:	
SHEET:	As-built.1
HTA PROJECT #:	22-6315-1

N:\Master Job List\6300 Jobs\6315\2024-01-31\dwg\22-6315-1 AS-BUILT.dwg, As-Built.1, 10/31/2025 9:31 AM, Mark Lesnick

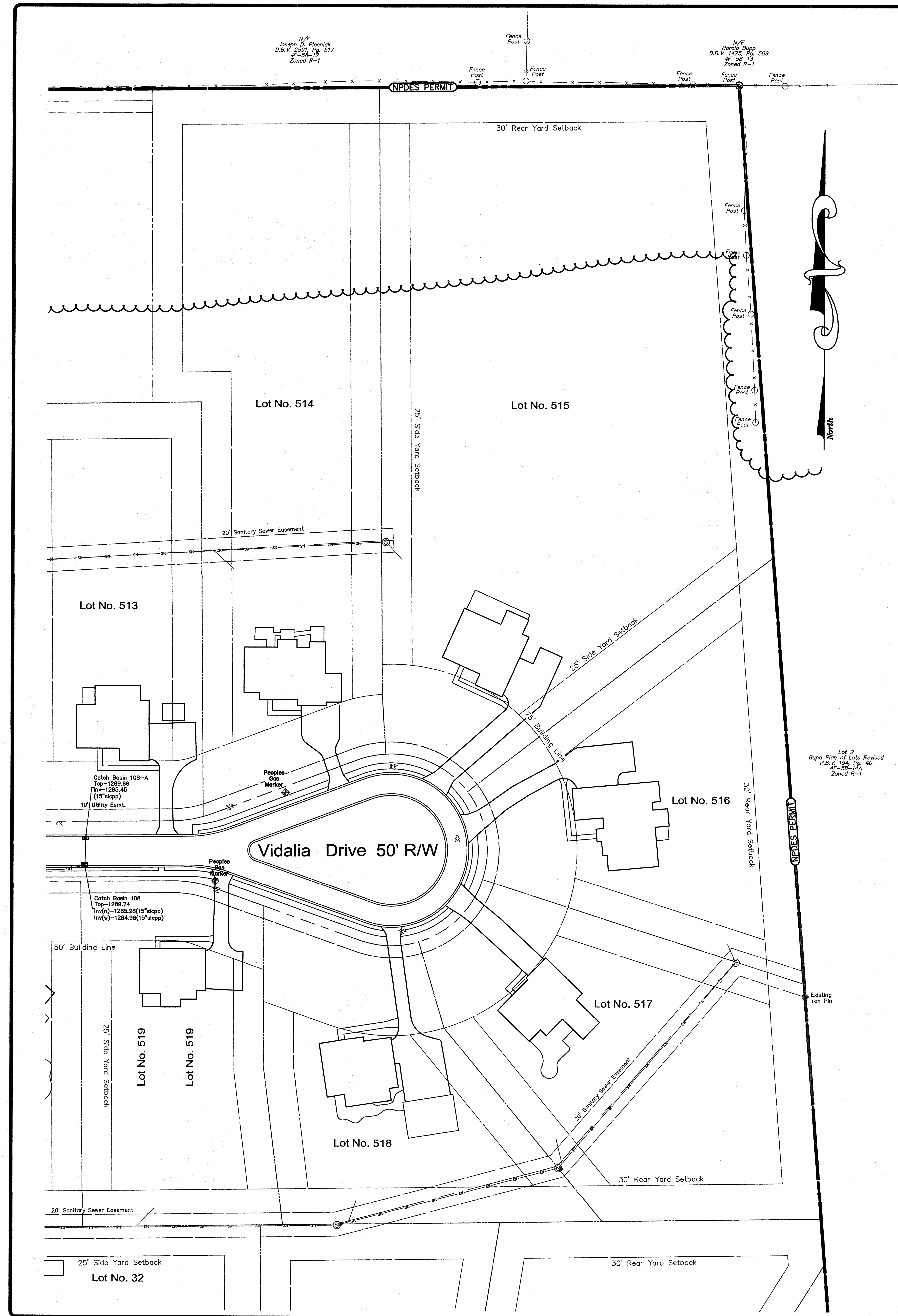
N/F
Joseph D. Plesniak
D.B.V. 2591, Pg. 517
4F-58-12
Zoned R-1
N/F
Harold Bupp
D.B.V. 1475, Pg. 569
4F-58-13
Zoned R-1
Fence Post
NPDES PERMIT
30' Rear Yard Setback
North
Lot No. 514
Lot No. 515
25' Side Yard Setback
20' Sanitary Sewer Easement
Lot No. 513
25' Side Yard Setback
25' Building Line
Peoples Gas Marker
Catch Basin 108-A
Top-1289.66
Inv-1285.45
(15"slcpp)
10' Utility Esmt.
Vidalia Drive 50' R/W
Catch Basin 108
Top-1289.74
Inv(n)-1285.28(15"slcpp)
Inv(w)-1284.98(15"slcpp)
50' Building Line
Lot No. 516
Lot 2
Bupp Plan of Lots Revised
P.B.V. 194, Pg. 40
4F-58-14A
Zoned R-1
30' Rear Yard Setback
NPDES PERMIT
Existing Iron Pin
Lot No. 517
Lot No. 519
Lot No. 519
25' Side Yard Setback
Lot No. 518
20' Sanitary Sewer Easement
30' Rear Yard Setback
20' Sanitary Sewer Easement
25' Side Yard Setback
30' Rear Yard Setback
Lot No. 32

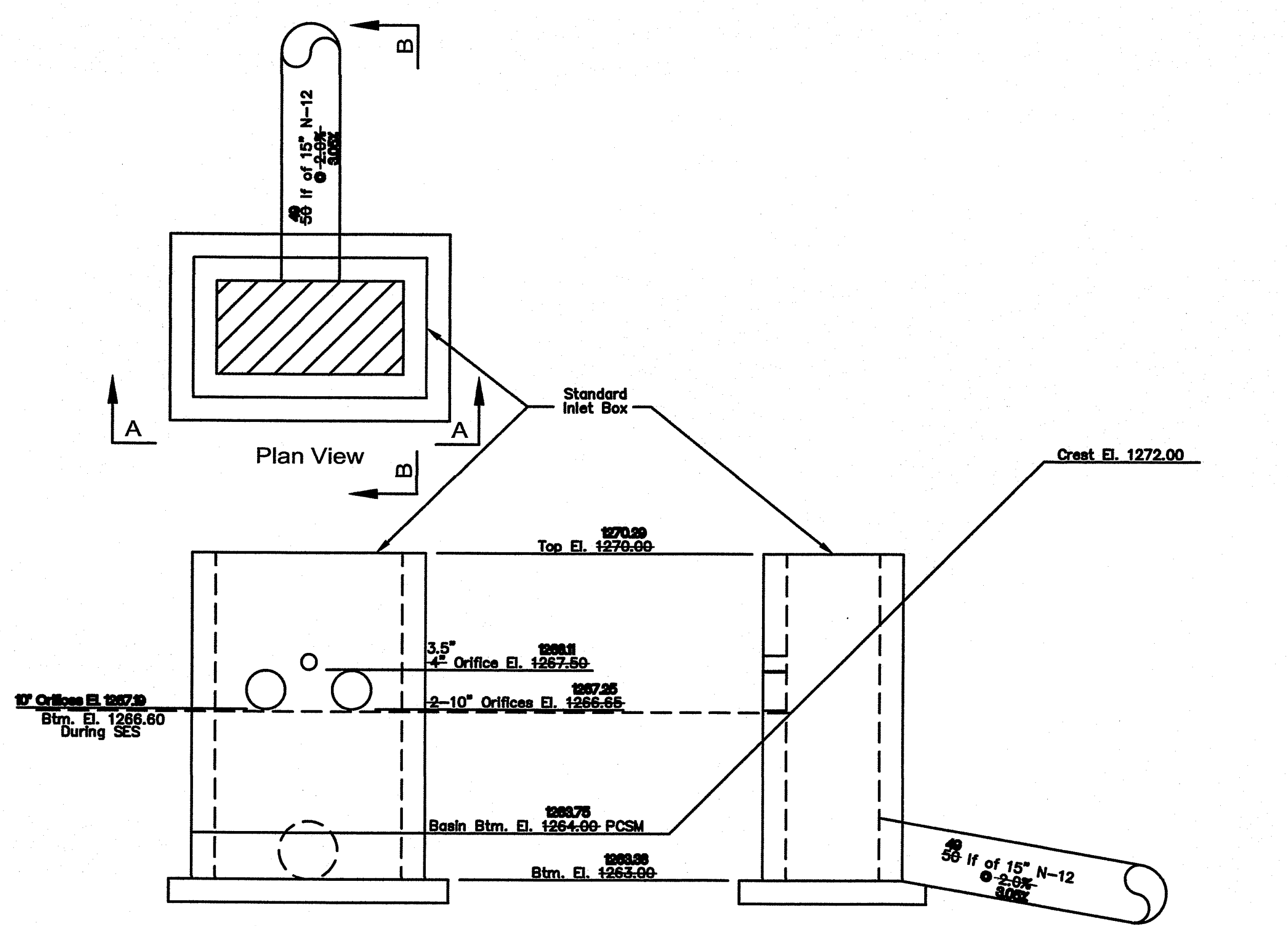
49
~~56~~ lf of 15" N-12
@ ~~2.0%~~
3.0%
B
A
A
B
Plan View
Standard Inlet Box
Crest El. 1272.00
Top El. ~~1270.00~~ 1270.29
3.5"
~~4"~~ Orifice El. ~~1267.50~~ 1268.11
2-10" Orifices El. ~~1266.65~~ 1267.25
10" Orifices El. 1267.19
Btm. El. 1266.60
During SES
Basin Btm. El. ~~1264.00~~ 1263.75 PCSM
Btm. El. ~~1263.00~~ 1263.38
Section AA
Section BB
Outfall El. 1261.89

Basin 1
Outlet Structure Detail

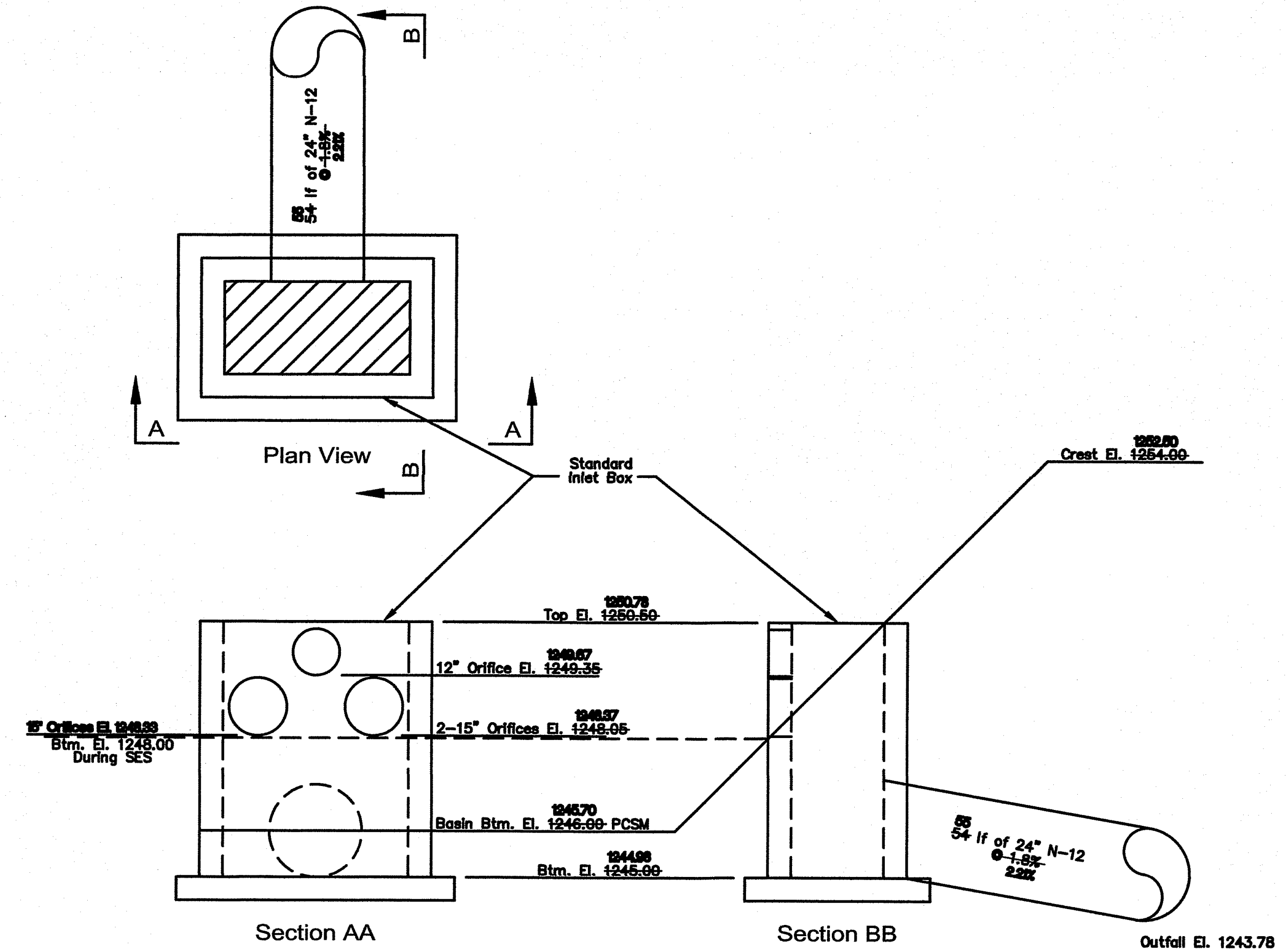
55
~~54~~ lf of 24" N-12
@ ~~1.8%~~
2.2%
B
A
A
B
Plan View
Standard Inlet Box
Crest El. ~~1254.00~~ 1252.50
Top El. ~~1250.50~~ 1250.78
12" Orifice El. ~~1249.35~~ 1249.67
2-15" Orifices El. ~~1248.05~~ 1248.37
15" Orifices El. 1248.33
Btm. El. 1248.00
During SES
Basin Btm. El. ~~1246.00~~ 1245.70 PCSM
Btm. El. ~~1245.00~~ 1244.98
Section AA
Section BB
Outfall El. 1243.78

Basin 2
Outlet Structure Detail

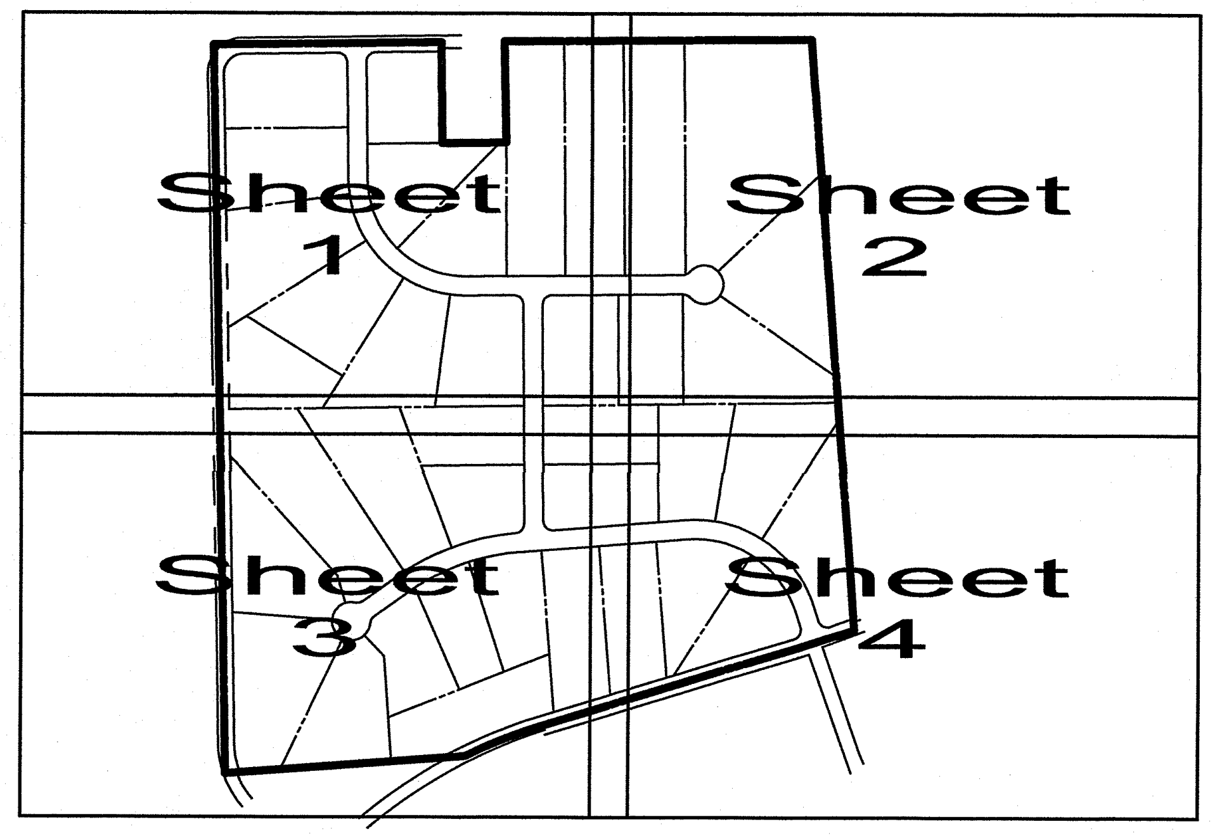
Sheet 1
Sheet 2
Sheet 3
Sheet 4

Owner ~ Developer
Brennan Builders, Inc.
800 S. Washington Street
Evans City, PA 16033

GRAPHIC SCALE

50
0
25
50
100
200

(IN FEET)
1 inch = 50 ft.

NOTE:
1. THIS DRAWING REPRESENTS UTILITY AS-BUILT INFORMATION ONLY.
2. SANITARY SEWER LATERALS SHOWN ARE APPROXIMATE LOCATION AND SHOULD BE FIELD VERIFIED
3. ALL DISTURBED AREAS NOT DESIGNATED AS MEADOW OR IMPERVIOUS COVER SHALL BE CONSIDERED OPEN SPACE.

Plantations 1	
Owner ~ Developer : Brennan Builders, Inc.	
Number of Lots	39 Lots
Minimum Lot Size	0.9329 ac.
Maximum Lot Size	3.6807 ac.
Total Site Acerage	64.0660 ac.
Total Lineal Feet of New Roadway	3521.30 feet

Site Data	
R-1 Zoning Requirements	
Minimum Lot Size	40,000 sq. ft.
Minimum Lot Width @ Building Line	150 feet
Minimum Front Yard Setback	50 feet
Minimum Side Yard Setback	25 feet
Minimum Rear Yard Setback	30 feet

PLAN BOOK	PAGE
434	6

MATTHEW B. SCHMIDT

HAMPTON
TECHNICAL ASSOCIATES, INC.
ENGINEERING LAND SURVEYORS
ESTABLISHED 1960
www.Hampton-Technical.com
email@hampton-technical.com

☐ Corporate Office
Etna Technical Center
35 Wilson Street, Suite 201
Pittsburgh, PA 15223
PHONE: (412) 781-9660
FAX: (412) 781-5904

☒ Mars Office
123 Ridge Road, Suite B
Valencia, PA 16059
PHONE: (724) 625-4544
FAX: (724) 625-4549

DRAWN BY: JCC
CHECKED BY: SRF
APPROVED BY: MBS
CAD FILE: 22-6315-1 As-built

TITLE
The Plantations 1
Storm Sewer As-Builts
Lancaster Township
Butler County, Pennsylvania

CLIENT
Brennan Builders, Inc.
800 S. Washington Street
Evans City, PA 16033

DATE ISSUED: 2023-10-05
HORIZONTAL SCALE: 1"=50'
VERTICAL SCALE:
SHEET: As-built.2
HTA PROJECT #: 22-6315-1

N:\Master Job List\6300 Jobs\6315\2024-01-31\dwg\22-6315-1 AS-BUILT.dwg, As-Built.2, 10/31/2025 9:32 AM, Mark Lesnick

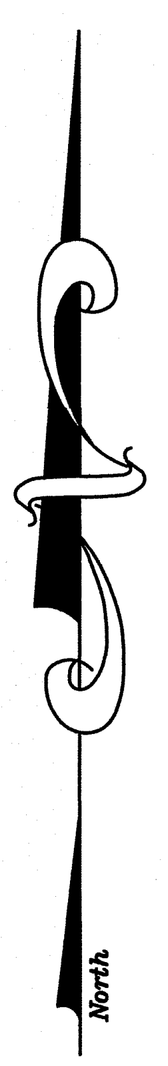

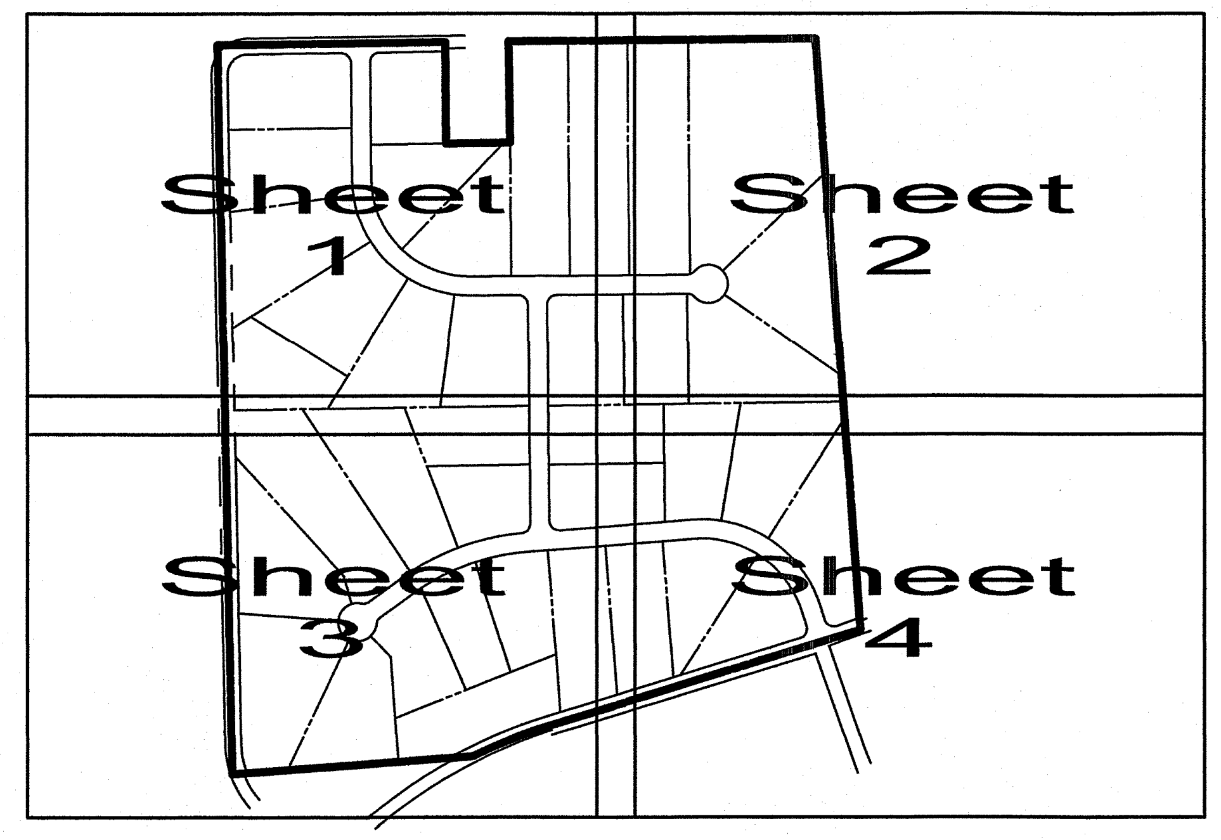
Sheet 1
Sheet 2
Sheet 3
Sheet 4

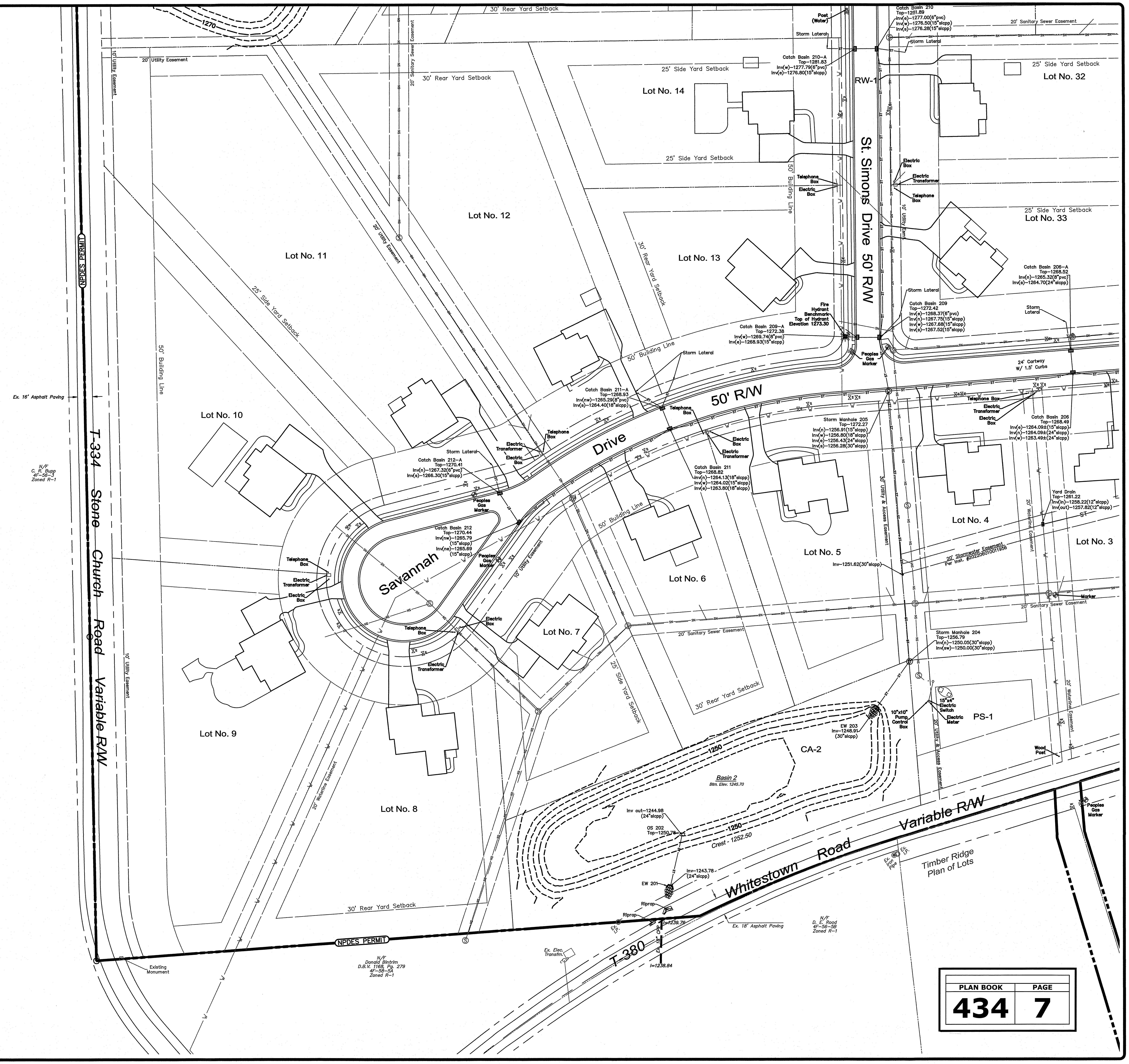
30' Rear Yard Setback
1270
20' Utility Easement
10' Utility Easement
20' Sanitary Sewer Easement
30' Rear Yard Setback
Post (Water)
Storm Lateral
Catch Basin 210
Top-1281.89
Inv(e)-1277.00(6"pvc)
Inv(w)-1276.50(15"slcpp)
Inv(s)-1276.28(15"slcpp)
Storm Lateral
20' Sanitary Sewer Easement
Catch Basin 210-A
Top-1281.83
Inv(w)-1277.79(6"pvc)
Inv(e)-1276.80(15"slcpp)
25' Side Yard Setback
25' Side Yard Setback
Lot No. 32
Lot No. 14
RW-1
25' Side Yard Setback
St. Simons Drive 50' R/W
50' Building Line
Electric Box
Electric Transformer
Telephone Box
Telephone Box
Electric Box
10' Utility Esmt.
25' Side Yard Setback
Lot No. 33
Lot No. 12
20' Utility Easement
Lot No. 11
30' Rear Yard Setback
Lot No. 13
25' Side Yard Setback
Catch Basin 206-A
Top-1268.52
Inv(n)-1265.32(8"pvc)
Inv(s)-1264.70(24"slcpp)
Storm Lateral
Catch Basin 209
Top-1272.42
Inv(e)-1268.37(6"pvc)
Inv(n)-1267.75(15"slcpp)
Inv(w)-1267.68(15"slcpp)
Inv(s)-1267.52(15"slcpp)
Storm Lateral
Fire Hydrant Benchmark-Top of Hydrant Elevation 1273.30
Catch Basin 209-A
Top-1272.38
Inv(w)-1269.74(8"pvc)
Inv(e)-1268.93(15"slcpp)
Peoples Gas Marker
24' Cartway W/ 1.5' Curbs
50' Building Line
Storm Lateral
50' Building Line
NPDES PERMIT
Ex. 16' Asphalt Paving
N/F C. R. Bupp 4F-56-3 Zoned R-1
T-334 Stone Church Road Variable R/W
Catch Basin 211-A
Top-1268.93
Inv(nw)-1265.29(8"pvc)
Inv(s)-1264.40(18"slcpp)
Telephone Box
50' R/W
Telephone Box
Electric Box
Electric Transformer
Telephone Box
Electric Box
Electric Transformer
Catch Basin 206
Top-1268.49
Inv(e)-1264.09±(15"slcpp)
Inv(n)-1264.09±(24"slcpp)
Inv(w)-1263.49±(24"slcpp)
Storm Manhole 205
Top-1272.27
Inv(n)-1256.91(15"slcpp)
Inv(w)-1256.80(18"slcpp)
Inv(e)-1256.43(24"slcpp)
Inv(s)-1256.28(30"slcpp)
Lot No. 10
Electric Transformer
Electric Box
Telephone Box
Storm Lateral
Catch Basin 212-A
Top-1270.41
Inv(n)-1267.32(6"pvc)
Inv(s)-1266.30(15"slcpp)
Drive
Catch Basin 211
Top-1268.82
Inv(n)-1264.13(18"slcpp)
Inv(w)-1264.02(15"slcpp)
Inv(e)-1263.80(18"slcpp)
Peoples Gas Marker
30' Utility & Access Easement
20' Waterline Easement
Yard Drain
Top-1261.22
Inv(in)-1258.22(12"slcpp)
Inv(out)-1257.82(12"slcpp)
Lot No. 4
Lot No. 3
Catch Basin 212
Top-1270.44
Inv(nw)-1265.79 (15"slcpp)
Inv(ne)-1265.69 (15"slcpp)
Peoples Gas Marker
50' Building Line
Lot No. 5
20' Stormwater Easement Per Inst. #202206010011956
Telephone Box
Electric Transformer
Electric Box
Savannah
10' Utility Easement
Lot No. 6
Inv-1251.62(30"slcpp)
Marker
20' Sanitary Sewer Easement
Telephone Box
Electric Box
Lot No. 7
20' Sanitary Sewer Easement
Electric Transformer
Storm Manhole 204
Top-1256.79
Inv(n)-1250.05(30"slcpp)
Inv(sw)-1250.00(30"slcpp)
10' Utility Easement
25' Side Yard Setback
30' Rear Yard Setback
15"x4" Electric Switch
10"x10" Pump Control Box
Electric Meter
PS-1
20' Utility & Access Easement
20' Waterline Easement
EW 203
Inv-1248.91 (30"slcpp)
Lot No. 9
1250
CA-2
Wood Post
Basin 2
Btm. Elev. 1245.70
20' Waterline Easement
Lot No. 8
Peoples Gas Marker
Inv out-1244.98 (24"slcpp)
OS 202
Top-1250.78
1250
Crest - 1252.50
Variable R/W
Whitestown Road
Timber Ridge Plan of Lots
Ex. Iron Pipe
Ex. I.P.
Inv-1243.78 (24"slcpp)
EW 201
30' Rear Yard Setback
Riprap
Riprap
Ex. I.P.
I=1239.76
Ex. 18" CPP
Ex. 18' Asphalt Paving
N/F D. E. Rood 4F-56-5B Zoned R-1
NPDES PERMIT
T-380
Ex. Elec. Transfm.
I=1238.84
Existing Monument
N/F Donald Bintrim D.B.V. 1168, Pg. 279 4F-58-5A Zoned R-1

PLAN BOOK	PAGE
434	7

NOTE:
1. THIS DRAWING REPRESENTS UTILITY AS-BUILT INFORMATION ONLY.
2. SANITARY SEWER LATERALS SHOWN ARE APPROXIMATE LOCATION AND SHOULD BE FIELD VERIFIED.
3. ALL DISTURBED AREAS NOT DESIGNATED AS MEADOW OR IMPERVIOUS COVER SHALL BE CONSIDERED OPEN SPACE.

Plantations 1	
Owner ~ Developer : Brennan Builders, Inc.	
Number of Lots	39 Lots
Minimum Lot Size	0.9329 ac.
Maximum Lot Size	3.6807 ac.
Total Site Acerage	64.0660 ac.
Total Lineal Feet of New Roadway	3521.30 feet

Site Data	
R-1 Zoning Requirements	
Minimum Lot Size	40,000 sq. ft.
Minimum Lot Width @ Building Line	150 feet
Minimum Front Yard Setback	50 feet
Minimum Side Yard Setback	25 feet
Minimum Rear Yard Setback	30 feet

Owner ~ Developer
Brennan Builders, Inc.
800 S. Washington Street
Evans City, PA 16033

GRAPHIC SCALE

50 0 25 50 100 200

(IN FEET)
1 inch = 50 ft.

MATTHEW B. SCHMIDT

HAMPTON
TECHNICAL ASSOCIATES, INC.
ENGINEERING LAND SURVEYORS
ESTABLISHED 1960
www.Hampton-Technical.com
email@hampton-technical.com

☐ Corporate Office
Etna Technical Center
35 Wilson Street, Suite 201
Pittsburgh, PA 15223
PHONE: (412) 781-9660
FAX: (412) 781-5904

☒ Mars Office
123 Ridge Road, Suite B
Valencia, PA 16059
PHONE: (724) 625-4544
FAX: (724) 625-4549

DRAWN BY:	JCC
CHECKED BY:	SRF
APPROVED BY:	MBS
CAD FILE:	22-6315-1 As-built

TITLE
The Plantations 1
Storm Sewer As-Builts
Lancaster Township
Butler County, Pennsylvania

CLIENT
Brennan Builders, Inc.
800 S. Washington Street
Evans City, PA 16033

DATE ISSUED:	2023-10-05
HORIZONTAL SCALE:	1"=50'
VERTICAL SCALE:	
SHEET:	As-built.3
HTA PROJECT #:	22-6315-1

N:\Master Job List\6300 Jobs\6315\2024-01-31\dwg\22-6315-1 AS-BUILT.dwg, As-Built.3, 10/31/2025 9:32 AM, Mark Lesnick

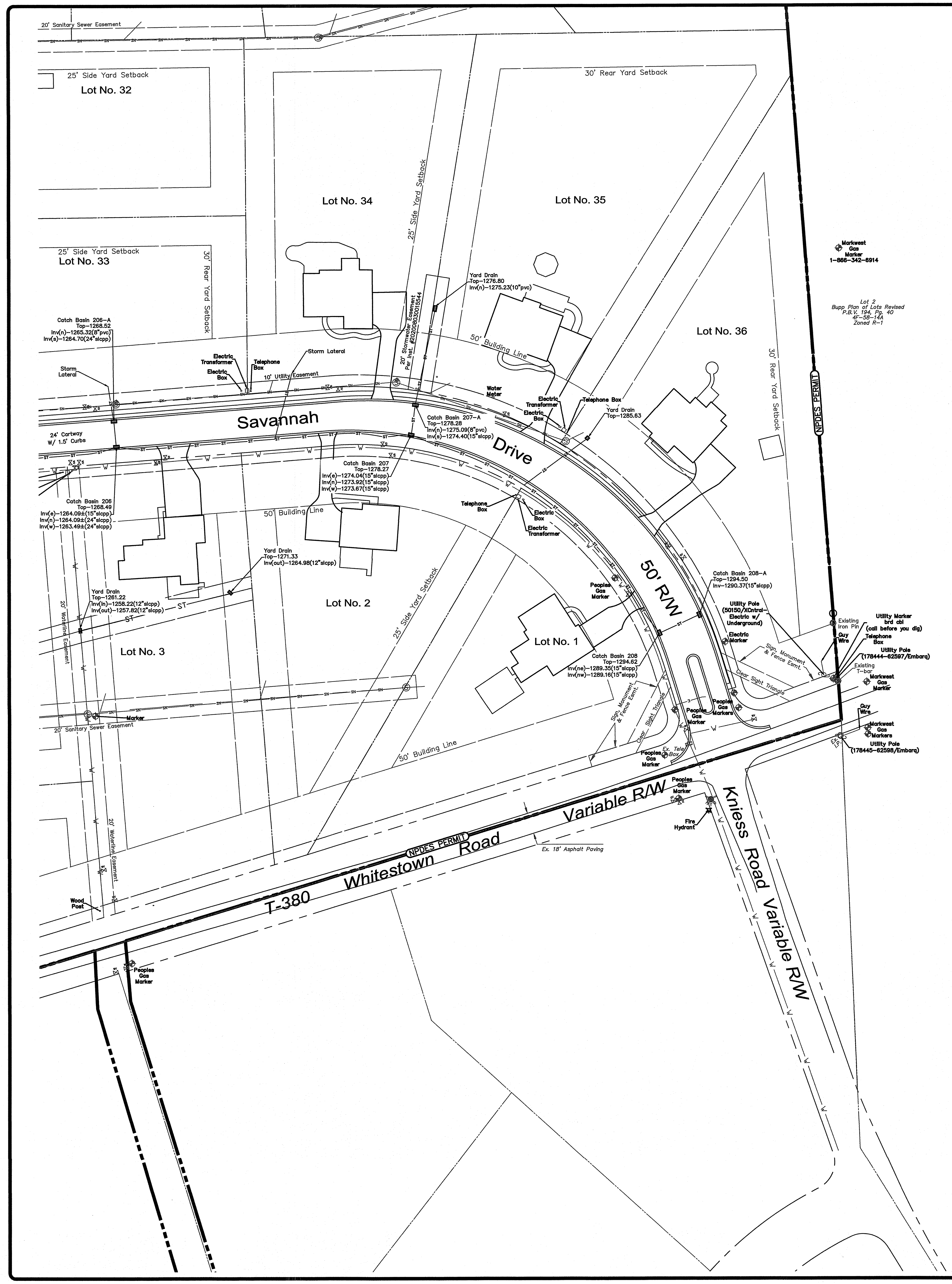
20' Sanitary Sewer Easement
25' Side Yard Setback
Lot No. 32
30' Rear Yard Setback
Lot No. 34
Lot No. 35
25' Side Yard Setback
25' Side Yard Setback
Lot No. 33
30' Rear Yard Setback
Yard Drain
Top–1276.80
Inv(n)–1275.23(10"pvc)
20' Stormwater Easement
Per Inst. #202008030015544
Lot No. 36
30' Rear Yard Setback
Catch Basin 206–A
Top–1268.52
Inv(n)–1265.32(8"pvc)
Inv(s)–1264.70(24"slcpp)
Storm Lateral
Electric Transformer
Electric Box
Telephone Box
Storm Lateral
10' Utility Easement
50' Building Line
Water Meter
Electric Transformer
Electric Box
Telephone Box
Yard Drain
Top–1285.63
Savannah
Drive
Catch Basin 207–A
Top–1278.28
Inv(n)–1275.09(8"pvc)
Inv(s)–1274.40(15"slcpp)
24' Cartway
W/ 1.5' Curbs
Catch Basin 207
Top–1278.27
Inv(e)–1274.04(15"slcpp)
Inv(n)–1273.92(15"slcpp)
Inv(w)–1273.67(15"slcpp)
Catch Basin 206
Top–1268.49
Inv(e)–1264.09±(15"slcpp)
Inv(n)–1264.09±(24"slcpp)
Inv(w)–1263.49±(24"slcpp)
Telephone Box
Electric Box
Electric Transformer
50' Building Line
Yard Drain
Top–1271.33
Inv(out)–1264.98(12"slcpp)
Lot No. 2
25' Side Yard Setback
50' R/W
Yard Drain
Top–1261.22
Inv(in)–1258.22(12"slcpp)
Inv(out)–1257.82(12"slcpp)
20' Waterline Easement
Lot No. 3
Peoples Gas Marker
Lot No. 1
Catch Basin 208–A
Top–1294.50
Inv–1290.37(15"slcpp)
Utility Pole
(50150/XCntrl–Electric w/ Underground)
Electric Marker
Catch Basin 208
Top–1294.62
Inv(ne)–1289.35(15"slcpp)
Inv(nw)–1289.16(15"slcpp)
Sign, Monument & Fence Esmt.
Clear Sight Triangle
Sign, Monument & Fence Esmt.
Clear Sight Triangle
Peoples Gas Markers
Peoples Gas Marker
Peoples Gas Marker
Ex. Tele Box
Marker
20' Sanitary Sewer Easement
50' Building Line
Markwest Gas Marker
1–866–342–6914
Lot 2
Bupp Plan of Lots Revised
P.B.V. 194, Pg. 40
4F–58–14A
Zoned R–1
NPDES PERMIT
Existing Iron Pin
Guy Wire
Utility Marker
brd cbl
(call before you dig)
Telephone Box
Utility Pole
(178444–62597/Embarq)
Existing T–bar
Markwest Gas Marker
Guy Wire
Markwest Gas Markers
Ex. I.P.
Utility Pole
(178445–62598/Embarq)
Peoples Gas Marker
Fire Hydrant
Variable R/W
Kniess Road Variable R/W
T-380 Whitestown Road
NPDES PERMIT
Ex. 18' Asphalt Paving
Wood Post
20' Waterline Easement
Peoples Gas Marker

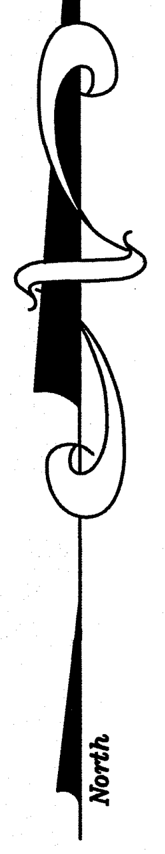

PLAN BOOK	PAGE
434	8

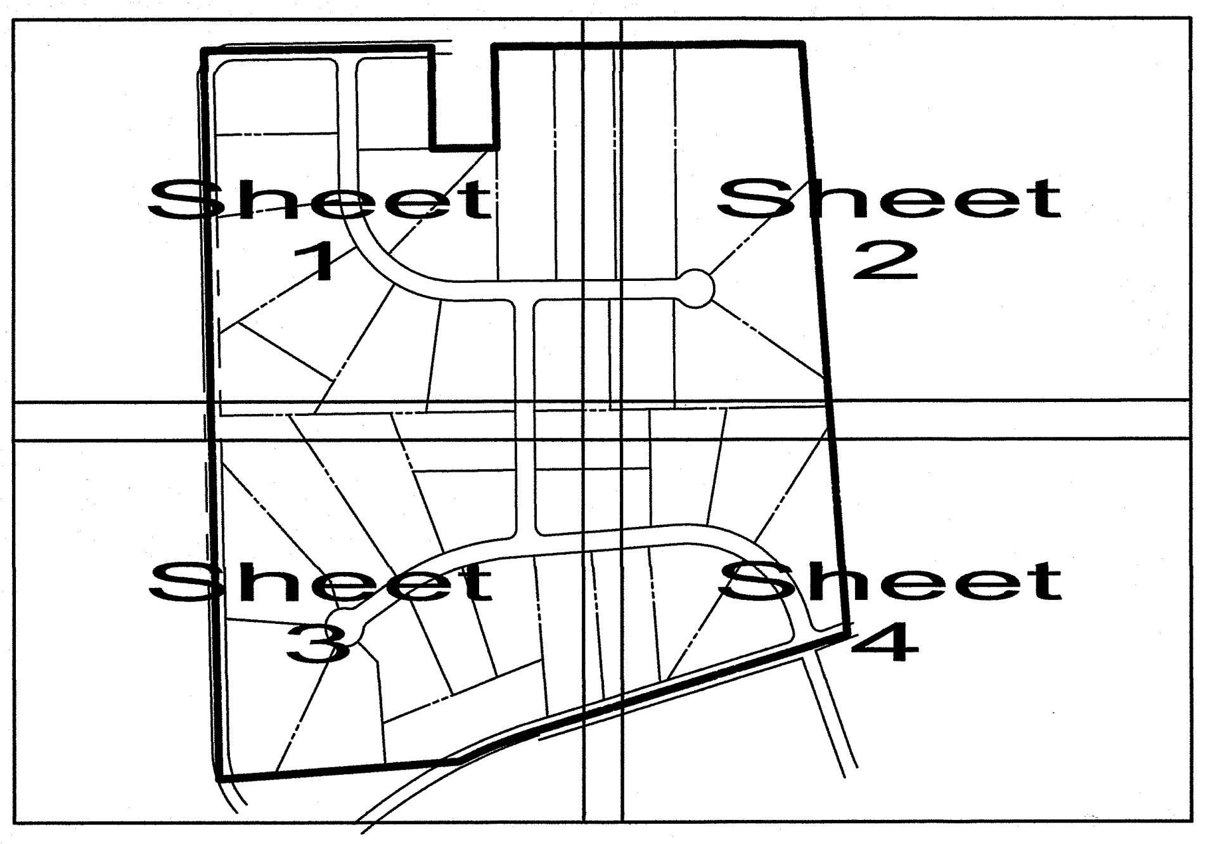
Sheet 1
Sheet 2
Sheet 3
Sheet 4

NOTE:
1. THIS DRAWING REPRESENTS UTILITY AS–BUILT INFORMATION ONLY.
2. SANITARY SEWER LATERALS SHOWN ARE APPROXIMATE LOCATION AND SHOULD BE FIELD VERIFIED.
3. ALL DISTURBED AREAS NOT DESIGNATED AS MEADOW OR IMPERVIOUS COVER SHALL BE CONSIDERED OPEN SPACE.

Owner ~ Developer
Brennan Builders, Inc.
800 S. Washington Street
Evans City, PA 16033

Plantations 1	
Owner ~ Developer : Brennan Builders, Inc.	
Number of Lots	39 Lots
Minimum Lot Size	0.9329 ac.
Maximum Lot Size	3.6807 ac.
Total Site Acerage	64.0660 ac.
Total Lineal Feet of New Roadway	3521.30 feet

GRAPHIC SCALE

50 0 25 50 100 200

(IN FEET)
1 inch = 50 ft.

Site Data	
R-1 Zoning Requirements	
Minimum Lot Size	40,000 sq. ft.
Minimum Lot Width @ Building Line	150 feet
Minimum Front Yard Setback	50 feet
Minimum Side Yard Setback	25 feet
Minimum Rear Yard Setback	30 feet

MATTHEW B. SCHMIDT

HAMPTON
TECHNICAL ASSOCIATES, INC.
ENGINEERING LAND SURVEYORS
ESTABLISHED 1960
www.Hampton-Technical.com
email@hampton-technical.com

☐ Corporate Office
Etna Technical Center
35 Wilson Street, Suite 201
Pittsburgh, PA 15223
PHONE: (412) 781–9660
FAX: (412) 781–5904

☒ Mars Office
123 Ridge Road, Suite B
Valencia, PA 16059
PHONE: (724) 625–4544
FAX: (724) 625–4549

DRAWN BY: JCC
CHECKED BY: SRF
APPROVED BY: MBS
CAD FILE: 22–6315–1 As–built

TITLE
The Plantations 1
Storm Sewer As–Builts
Lancaster Township
Butler County, Pennsylvania

CLIENT
Brennan Builders, Inc.
800 S. Washington Street
Evans City, PA 16033

DATE ISSUED: 2023–10–05
HORIZONTAL SCALE: 1"=50'
VERTICAL SCALE:
SHEET: As–built.4
HTA PROJECT #: 22–6315–1

N:\Master Job List\6300 Jobs\6315\2024–01–31\dwg\22–6315–1 AS–BUILT.dwg, As–Built.4, 10/31/2025 9:31 AM, Mark Lesnick

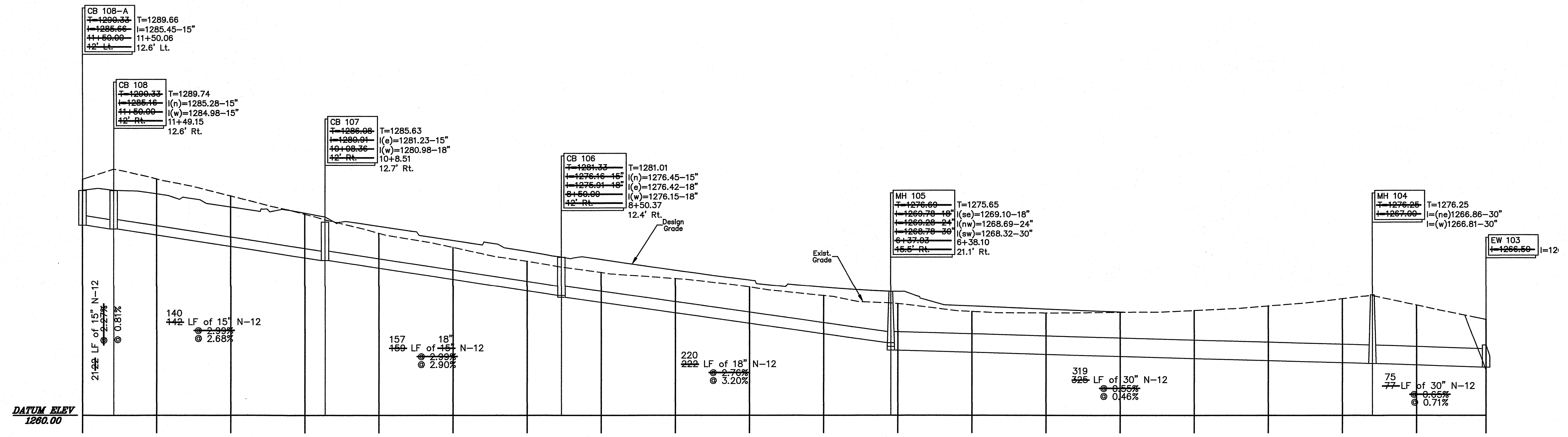
CB 108–A
~~T=1290.33~~ T=1289.66
~~I=1285.66~~ I=1285.45–15"
~~11+50.00~~ 11+50.06
~~12' Lt.~~ 12.6' Lt.
CB 108
~~T=1290.33~~ T=1289.74
~~I=1285.16~~ I(n)=1285.28–15"
~~11+50.00~~ I(w)=1284.98–15"
~~12' Rt.~~ 11+49.15
12.6' Rt.
CB 107
~~T=1286.08~~ T=1285.63
~~I=1280.91~~ I(e)=1281.23–15"
~~10+08.36~~ I(w)=1280.98–18"
~~12' Rt.~~ 10+8.51
12.7' Rt.
CB 106
~~T=1281.33~~ T=1281.01
~~I=1276.16–15"~~ I(n)=1276.45–15"
~~I=1275.91–18"~~ I(e)=1276.42–18"
~~8+50.00~~ I(w)=1276.15–18"
~~12' Rt.~~ 8+50.37
12.4' Rt.
MH 105
~~T=1276.69~~ T=1275.65
~~I=1269.78–18"~~ I(se)=1269.10–18"
~~I=1269.28–24"~~ I(nw)=1268.69–24"
~~I=1268.78–30"~~ I(sw)=1268.32–30"
~~6+37.03~~ 6+38.10
~~15.5' Rt.~~ 21.1' Rt.
MH 104
~~T=1276.25~~ T=1276.25
~~I=1267.00~~ I=(ne)1266.86–30"
I=(w)1266.81–30"
EW 103
~~I=1266.50~~ I=12
Design Grade
Exist. Grade
21 ~~22~~ LF of 15" N–12
~~@ 2.27%~~
@ 0.81%
140
~~142~~ LF of 15" N–12
~~@ 2.99%~~
@ 2.68%
157
~~159~~ LF of ~~15"~~ 18" N–12
~~@ 2.99%~~
@ 2.90%
220
~~222~~ LF of 18" N–12
~~@ 2.76%~~
@ 3.20%
319
~~325~~ LF of 30" N–12
~~@ 0.55%~~
@ 0.46%
75
~~77~~ LF of 30" N–12
~~@ 0.65%~~
@ 0.71%
DATUM ELEV
1260.00

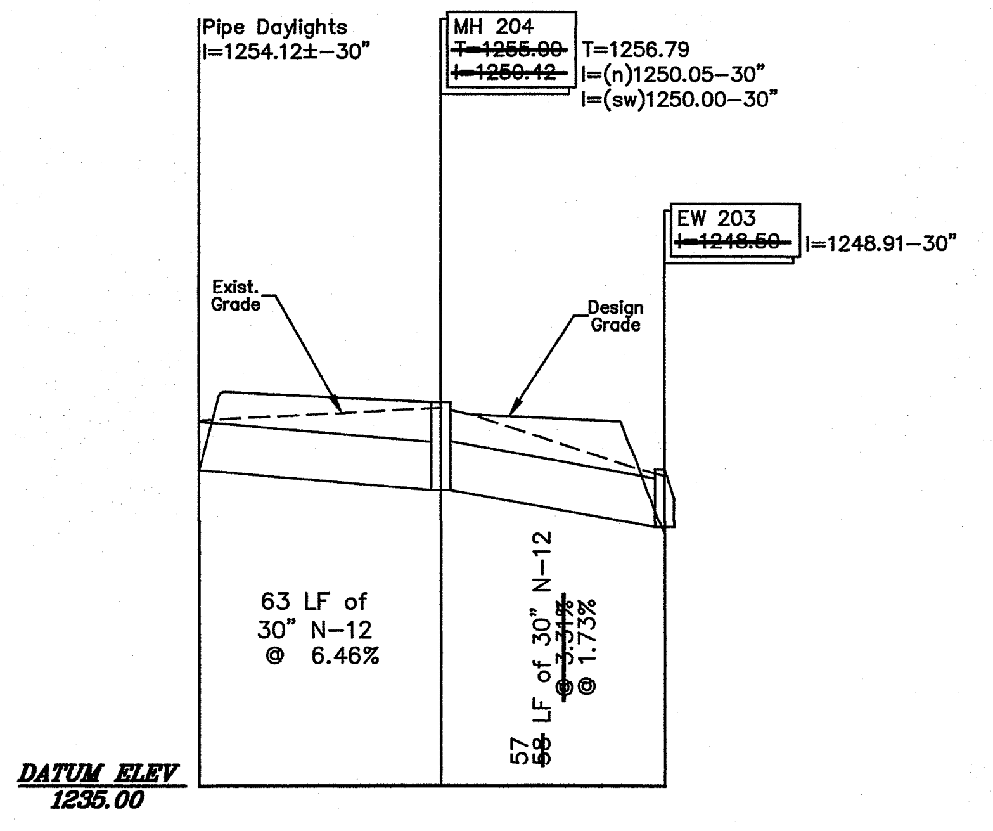
Pipe Daylights
I=1254.12±–30"
MH 204
~~T=1255.00~~ T=1256.79
~~I=1250.42~~ I=(n)1250.05–30"
I=(sw)1250.00–30"
EW 203
~~I=1248.50~~ I=1248.91–30"
Exist. Grade
Design Grade
63 LF of
30" N–12
@ 6.46%
57
~~58~~ LF of 30" N–12
~~@ 3.31%~~
@ 1.73%
DATUM ELEV
1235.00

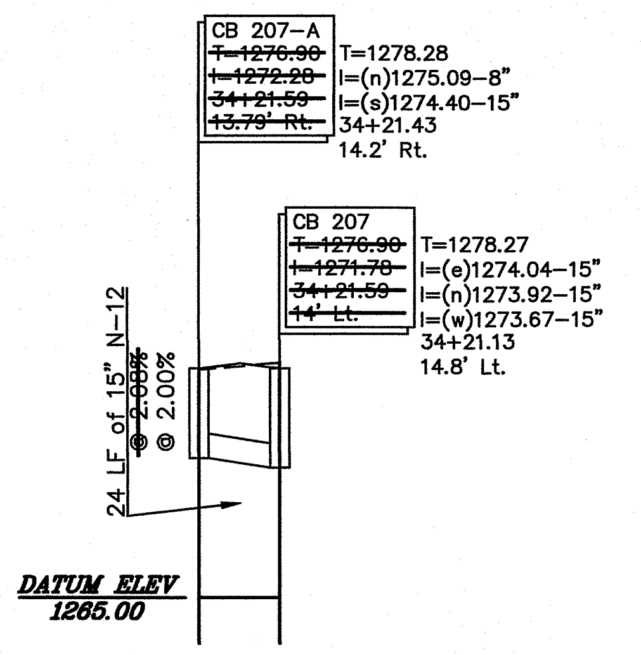
CB 207–A
~~T=1276.90~~ T=1278.28
~~I=1272.28~~ I=(n)1275.09–8"
~~34+21.59~~ I=(s)1274.40–15"
~~13.79' Rt.~~ 34+21.43
14.2' Rt.
CB 207
~~T=1276.90~~ T=1278.27
~~I=1271.78~~ I=(e)1274.04–15"
~~34+21.59~~ I=(n)1273.92–15"
~~14' Lt.~~ I=(w)1273.67–15"
34+21.13
14.8' Lt.
24 LF of 15" N–12
~~@ 2.08%~~
@ 2.00%
DATUM ELEV
1265.00

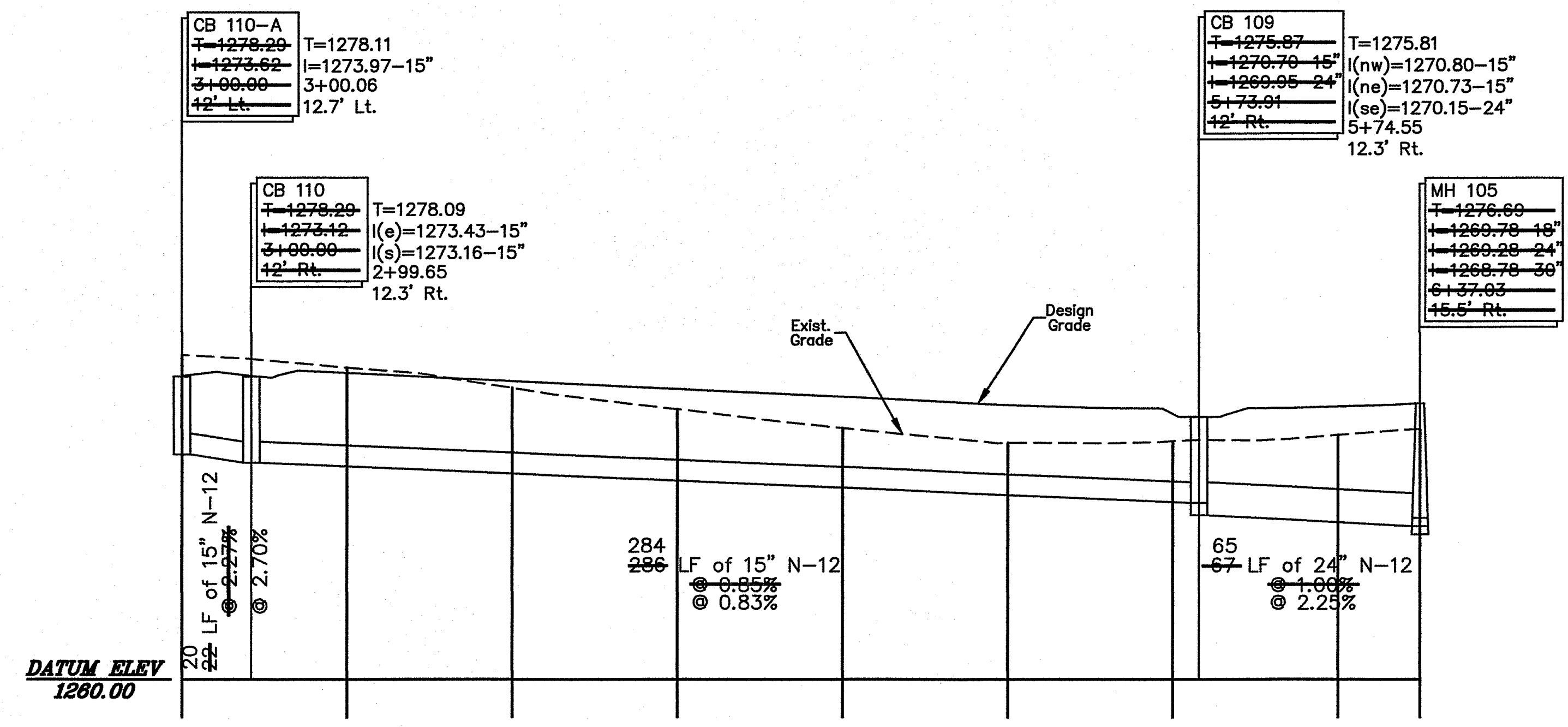
CB 110–A
~~T=1278.29~~ T=1278.11
~~I=1273.62~~ I=1273.97–15"
~~3+00.00~~ 3+00.06
~~12' Lt.~~ 12.7' Lt.
CB 110
~~T=1278.29~~ T=1278.09
~~I=1273.12~~ I(e)=1273.43–15"
~~3+00.00~~ I(s)=1273.16–15"
~~12' Rt.~~ 2+99.65
12.3' Rt.
CB 109
~~T=1275.87~~ T=1275.81
~~I=1270.70–15"~~ I(nw)=1270.80–15"
~~I=1269.95–24"~~ I(ne)=1270.73–15"
~~5+73.91~~ I(se)=1270.15–24"
~~12' Rt.~~ 5+74.55
12.3' Rt.
MH 105
~~T=1276.69~~ T=1275.65
~~I=1269.78–18"~~ I(se)=1269.10–18"
~~I=1269.28–24"~~ I(nw)=1268.69–24"
~~I=1268.78–30"~~ I(sw)=1268.32–30"
~~6+37.03~~ 6+38.10
~~15.5' Rt.~~ 21.1' Rt.
Exist. Grade
Design Grade
20 ~~22~~ LF of 15" N–12
~~@ 2.27%~~
@ 2.70%
284
~~286~~ LF of 15" N–12
~~@ 0.85%~~
@ 0.83%
65
~~67~~ LF of 24" N–12
~~@ 1.00%~~
@ 2.25%
DATUM ELEV
1260.00

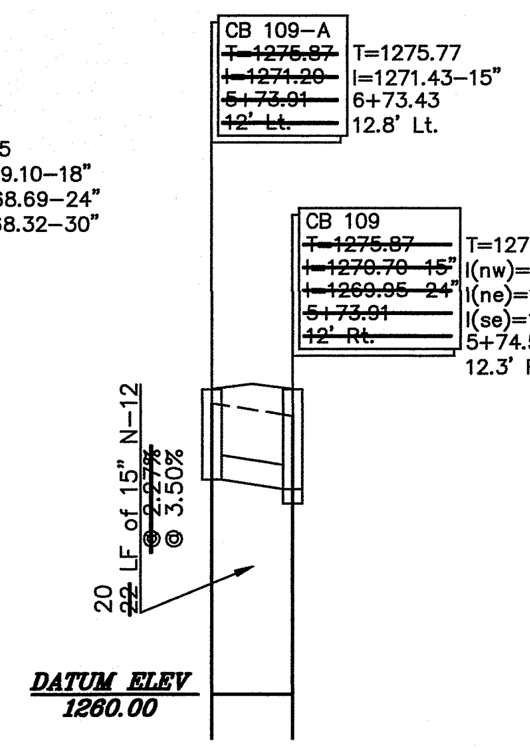
CB 109–A
~~T=1275.87~~ T=1275.77
~~I=1271.20~~ I=1271.43–15"
~~5+73.91~~ 6+73.43
~~12' Lt.~~ 12.8' Lt.
CB 109
~~T=1275.87~~ T=1275.81
~~I=1270.70–15"~~ I(nw)=1270.80–15"
~~I=1269.95–24"~~ I(ne)=1270.73–15"
~~5+73.91~~ I(se)=1270.15–24"
~~12' Rt.~~ 5+74.55
12.3' Rt.
20 ~~22~~ LF of 15" N–12
~~@ 2.27%~~
@ 3.50%
DATUM ELEV
1260.00

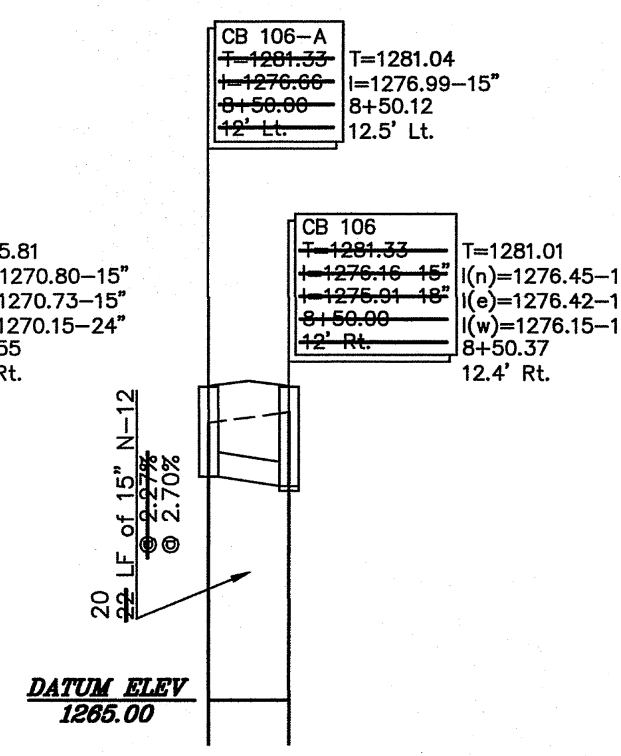
CB 106–A
~~T=1281.33~~ T=1281.04
~~I=1276.66~~ I=1276.99–15"
~~8+50.00~~ 8+50.12
~~12' Lt.~~ 12.5' Lt.
CB 106
~~T=1281.33~~ T=1281.01
~~I=1276.16–15"~~ I(n)=1276.45–15"
~~I=1275.91–18"~~ I(e)=1276.42–18"
~~8+50.00~~ I(w)=1276.15–18"
~~12' Rt.~~ 8+50.37
12.4' Rt.
20 ~~22~~ LF of 15" N–12
~~@ 2.27%~~
@ 2.70%
DATUM ELEV
1265.00

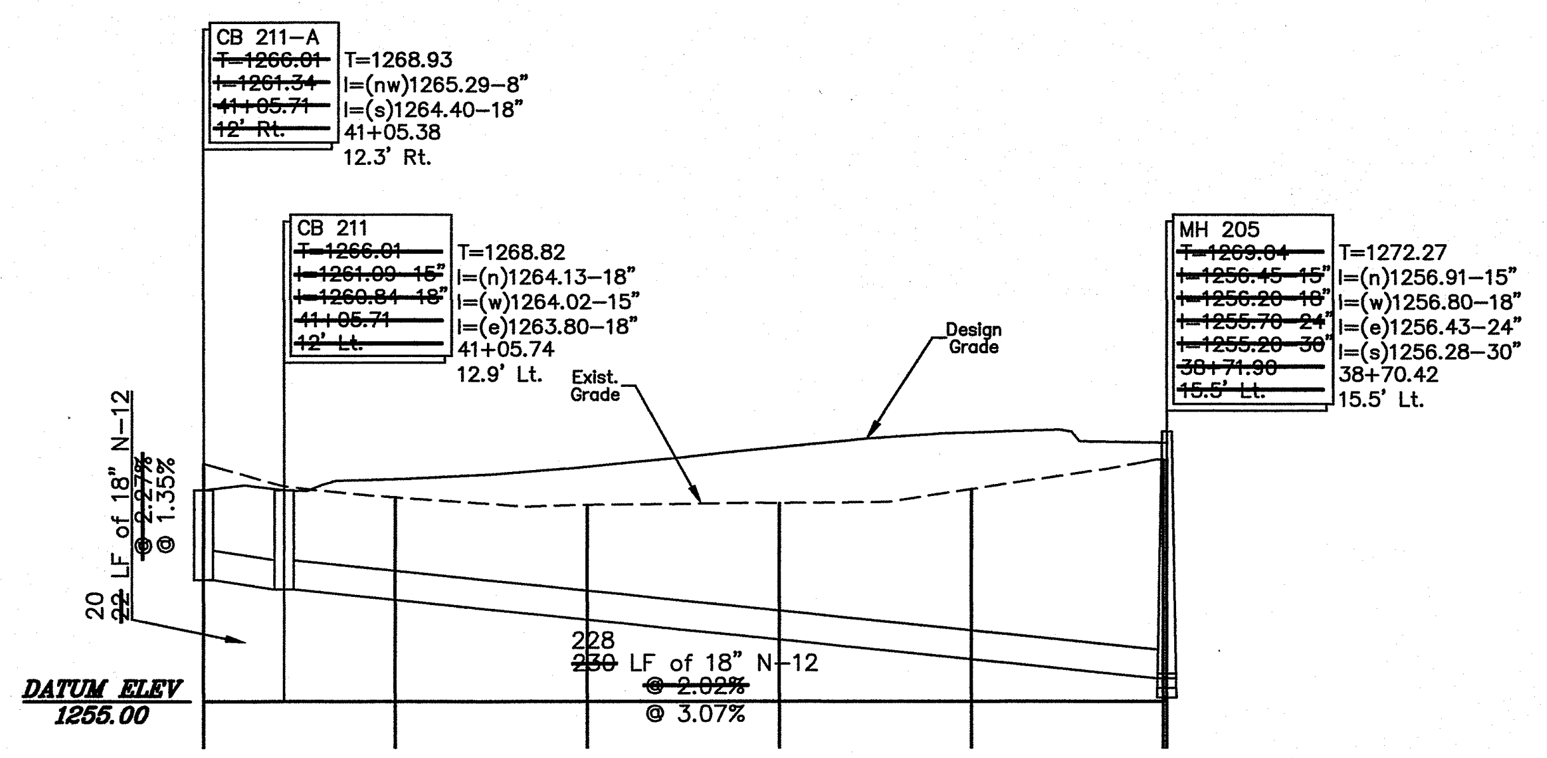
CB 211–A
~~T=1266.01~~ T=1268.93
~~I=1261.34~~ I=(nw)1265.29–8"
~~41+05.71~~ I=(s)1264.40–18"
~~12' Rt.~~ 41+05.38
12.3' Rt.
CB 211
~~T=1266.01~~ T=1268.82
~~I=1261.09–15"~~ I=(n)1264.13–18"
~~I=1260.84–18"~~ I=(w)1264.02–15"
~~41+05.71~~ I=(e)1263.80–18"
~~12' Lt.~~ 41+05.74
12.9' Lt.
MH 205
~~T=1269.04~~ T=1272.27
~~I=1256.45–15"~~ I=(n)1256.91–15"
~~I=1256.20–18"~~ I=(w)1256.80–18"
~~I=1255.70–24"~~ I=(e)1256.43–24"
~~I=1255.20–30"~~ I=(s)1256.28–30"
~~38+71.90~~ 38+70.42
~~15.5' Lt.~~ 15.5' Lt.
Exist. Grade
Design Grade
20 ~~22~~ LF of 18" N–12
~~@ 2.27%~~
@ 1.35%
228
~~230~~ LF of 18" N–12
~~@ 2.02%~~
@ 3.07%
DATUM ELEV
1255.00

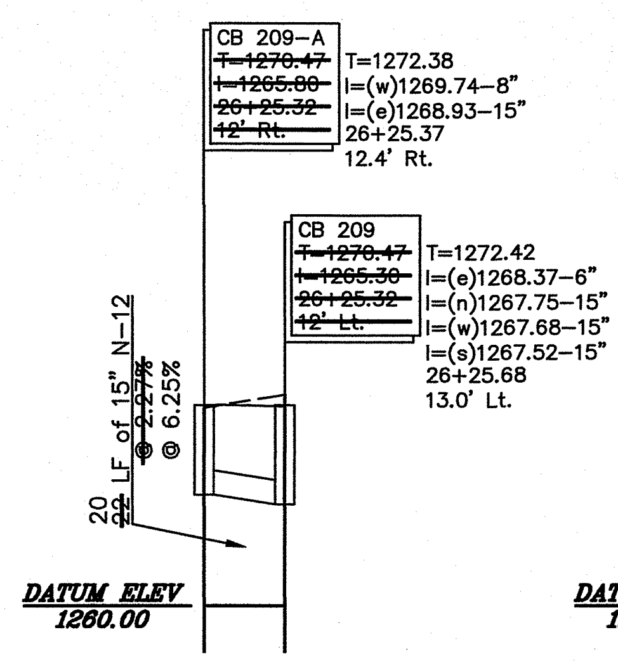
CB 209–A
~~T=1270.47~~ T=1272.38
~~I=1265.80~~ I=(w)1269.74–8"
~~26+25.32~~ I=(e)1268.93–15"
~~12' Rt.~~ 26+25.37
12.4' Rt.
CB 209
~~T=1270.47~~ T=1272.42
~~I=1265.30~~ I=(e)1268.37–6"
~~26+25.32~~ I=(n)1267.75–15"
~~12' Lt.~~ I=(w)1267.68–15"
I=(s)1267.52–15"
26+25.68
13.0' Lt.
20 ~~22~~ LF of 15" N–12
~~@ 2.27%~~
@ 6.25%
DATUM ELEV
1260.00

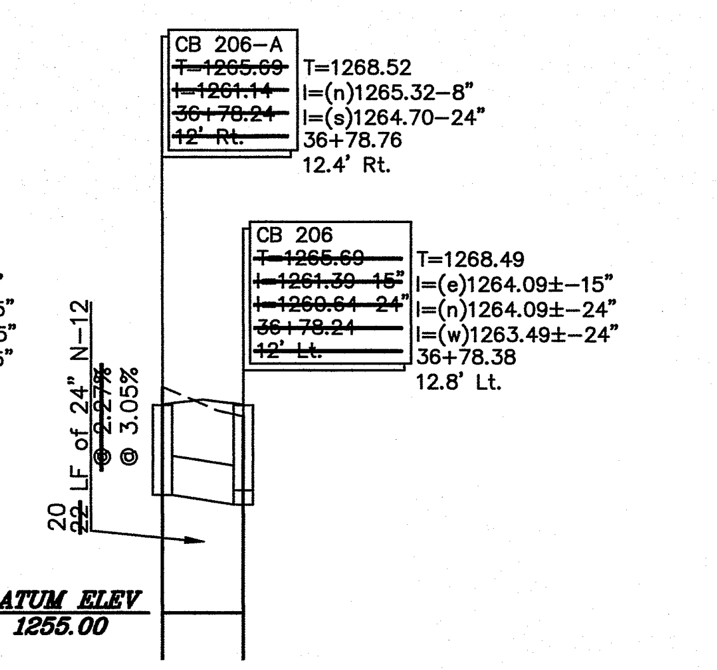
CB 206–A
~~T=1265.69~~ T=1268.52
~~I=1261.14~~ I=(n)1265.32–8"
~~36+78.24~~ I=(s)1264.70–24"
~~12' Rt.~~ 36+78.76
12.4' Rt.
CB 206
~~T=1265.69~~ T=1268.49
~~I=1261.39–15"~~ I=(e)1264.09±–15"
~~I=1260.64–24"~~ I=(n)1264.09±–24"
~~36+78.24~~ I=(w)1263.49±–24"
~~12' Lt.~~ 36+78.38
12.8' Lt.
20 ~~22~~ LF of 24" N–12
~~@ 2.27%~~
@ 3.05%
DATUM ELEV
1255.00

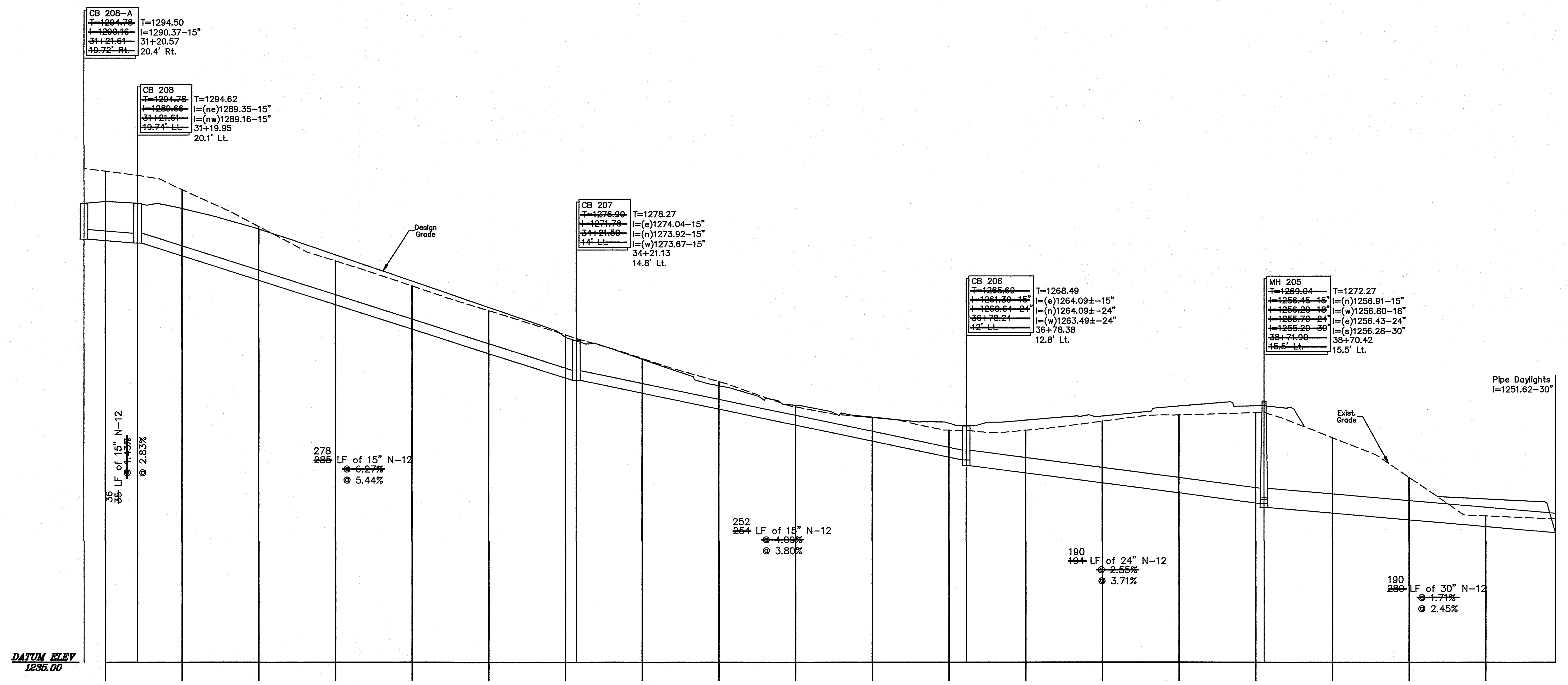
CB 208–A
~~T=1294.78~~ T=1294.50
~~I=1290.16~~ I=1290.37–15"
~~31+21.61~~ 31+20.57
~~19.72' Rt.~~ 20.4' Rt.
CB 208
~~T=1294.78~~ T=1294.62
~~I=1289.66~~ I=(ne)1289.35–15"
~~31+21.61~~ I=(nw)1289.16–15"
~~19.74' Lt.~~ 31+19.95
20.1' Lt.
CB 207
~~T=1276.90~~ T=1278.27
~~I=1271.78~~ I=(e)1274.04–15"
~~34+21.59~~ I=(n)1273.92–15"
~~14' Lt.~~ I=(w)1273.67–15"
34+21.13
14.8' Lt.
CB 206
~~T=1265.69~~ T=1268.49
~~I=1261.39–15"~~ I=(e)1264.09±–15"
~~I=1260.64–24"~~ I=(n)1264.09±–24"
~~36+78.24~~ I=(w)1263.49±–24"
~~12' Lt.~~ 36+78.38
12.8' Lt.
MH 205
~~T=1269.04~~ T=1272.27
~~I=1256.45–15"~~ I=(n)1256.91–15"
~~I=1256.20–18"~~ I=(w)1256.80–18"
~~I=1255.70–24"~~ I=(e)1256.43–24"
~~I=1255.20–30"~~ I=(s)1256.28–30"
~~38+71.90~~ 38+70.42
~~15.5' Lt.~~ 15.5' Lt.
Pipe Daylights
I=1251.62–30"
Design Grade
Exist. Grade
36 ~~35~~ LF of 15" N–12
~~@ 1.43%~~
@ 2.83%
278
~~285~~ LF of 15" N–12
~~@ 6.27%~~
@ 5.44%
252
~~254~~ LF of 15" N–12
~~@ 4.09%~~
@ 3.80%
190
~~194~~ LF of 24" N–12
~~@ 2.55%~~
@ 3.71%
190
~~280~~ LF of 30" N–12
~~@ 1.71%~~
@ 2.45%
DATUM ELEV
1235.00

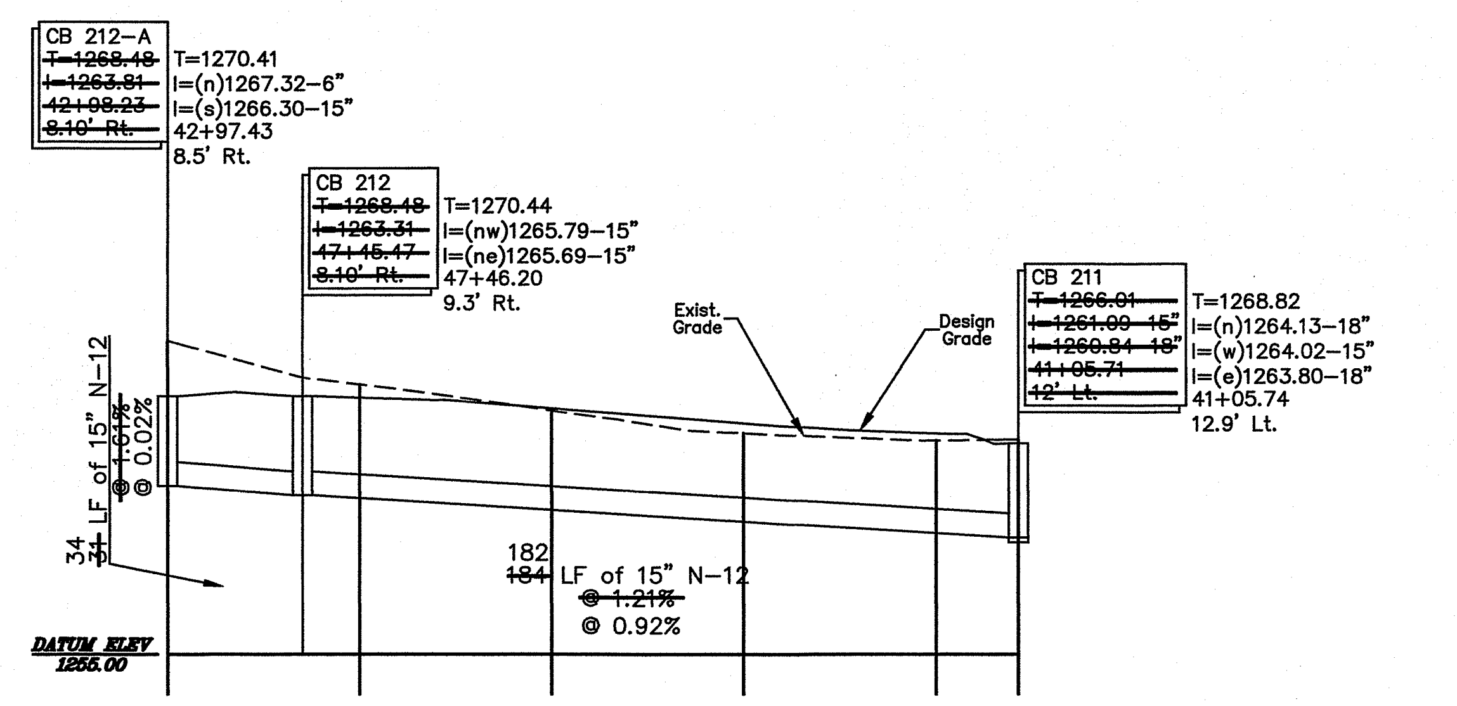
CB 212–A
~~T=1268.48~~ T=1270.41
~~I=1263.81~~ I=(n)1267.32–6"
~~42+98.23~~ I=(s)1266.30–15"
~~8.10' Rt.~~ 42+97.43
8.5' Rt.
CB 212
~~T=1268.48~~ T=1270.44
~~I=1263.31~~ I=(nw)1265.79–15"
~~47+45.47~~ I=(ne)1265.69–15"
~~8.10' Rt.~~ 47+46.20
9.3' Rt.
CB 211
~~T=1266.01~~ T=1268.82
~~I=1261.09–15"~~ I=(n)1264.13–18"
~~I=1260.84–18"~~ I=(w)1264.02–15"
~~41+05.71~~ I=(e)1263.80–18"
~~12' Lt.~~ 41+05.74
12.9' Lt.
Exist. Grade
Design Grade
34 ~~31~~ LF of 15" N–12
~~@ 1.61%~~
@ 0.02%
182
~~184~~ LF of 15" N–12
~~@ 1.21%~~
@ 0.92%
DATUM ELEV
1255.00

PLAN BOOK	PAGE
434	9

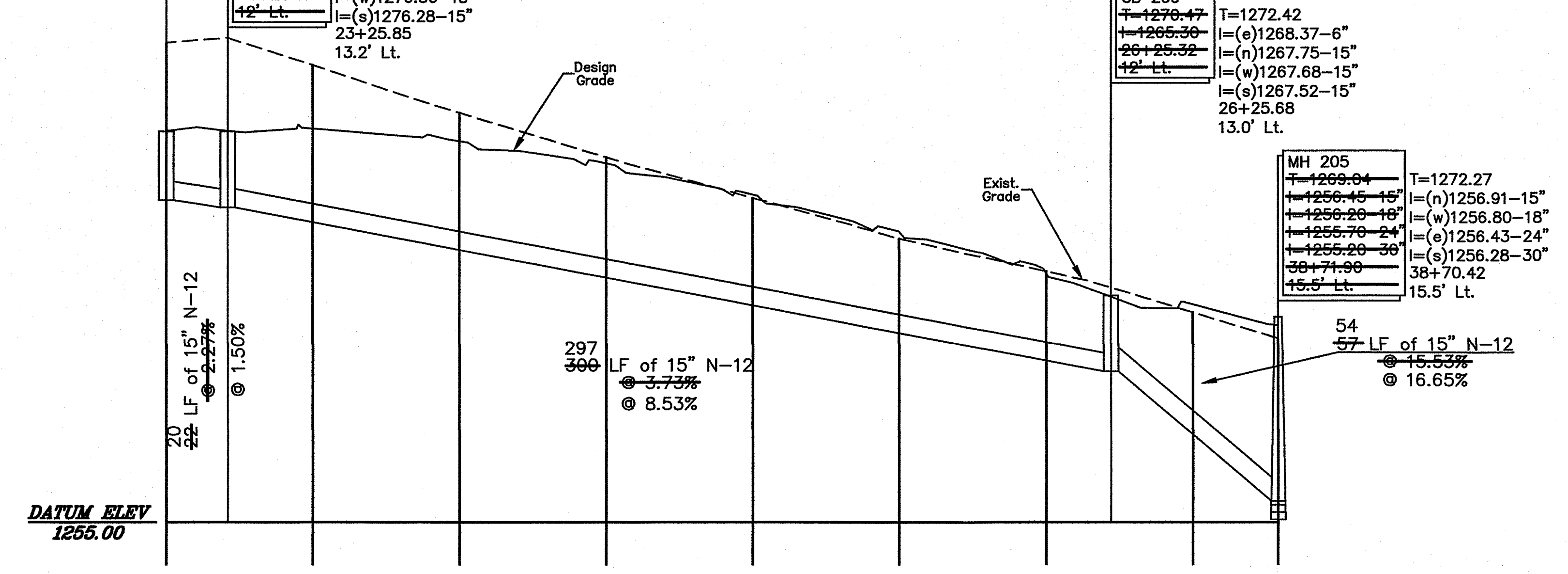
CB 210–A
~~T=1281.65~~ T=1281.83
~~I=1276.98~~ I=(w)1277.79–6"
~~23+25.32~~ I=(e)1276.80–15"
~~12' Rt.~~ 23+25.71
12.3' Rt.
CB 210
~~T=1281.65~~ T=1281.89
~~I=1276.48~~ I=(e)1277.00–6"
~~23+25.32~~ I=(w)1276.50–15"
~~12' Lt.~~ I=(s)1276.28–15"
23+25.85
13.2' Lt.
CB 209
~~T=1270.47~~ T=1272.42
~~I=1265.30~~ I=(e)1268.37–6"
~~26+25.32~~ I=(n)1267.75–15"
~~12' Lt.~~ I=(w)1267.68–15"
I=(s)1267.52–15"
26+25.68
13.0' Lt.
MH 205
~~T=1269.04~~ T=1272.27
~~I=1256.45–15"~~ I=(n)1256.91–15"
~~I=1256.20–18"~~ I=(w)1256.80–18"
~~I=1255.70–24"~~ I=(e)1256.43–24"
~~I=1255.20–30"~~ I=(s)1256.28–30"
~~38+71.90~~ 38+70.42
~~15.5' Lt.~~ 15.5' Lt.
Design Grade
Exist. Grade
20 ~~22~~ LF of 15" N–12
~~@ 2.27%~~
@ 1.50%
297
~~300~~ LF of 15" N–12
~~@ 3.73%~~
@ 8.53%
54
~~57~~ LF of 15" N–12
~~@ 15.53%~~
@ 16.65%
DATUM ELEV
1255.00

MATTHEW B. SCHMIDT

HAMPTON
TECHNICAL ASSOCIATES, INC.
ENGINEERING LAND SURVEYORS
ESTABLISHED 1960
www.Hampton-Technical.com
email@hampton-technical.com

☐ **Corporate Office**
Etna Technical Center
35 Wilson Street, Suite 201
Pittsburgh, PA 15223
PHONE: (412) 781-9660
FAX: (412) 781-5904

☒ **Mars Office**
123 Ridge Road, Suite B
Valencia, PA 16059
PHONE: (724) 625-4544
FAX: (724) 625-4549

DRAWN BY:	JCC
CHECKED BY:	SRF
APPROVED BY:	MBS
CAD FILE:	22-6315-1 As-built

TITLE
The Plantations 1
Storm Sewer As-Built Profiles
Lancaster Township
Butler County, Pennsylvania

CLIENT
Brennan Builders, Inc.
800 S. Washington Street
Evans City, PA 16033

DATE ISSUED:	2023-10-05
HORIZONTAL SCALE:	1"=50'
VERTICAL SCALE:	1"=10'
SHEET:	As-built.Prof
HTA PROJECT #:	22-6315-1

N:\Master Job List\6300 Jobs\6315\2024-01-31\dwg\22-6315-1 AS-BUILT.dwg, As-Built.Profiles, 10/31/2025 9:32 AM, Mark Lesnick

MAINTENANCE PROGRAM

The Plantations Homeowners' Association is responsible for ownership and maintenance of all stormwater management facilities. Maintenance of the stormwater management facilities includes, but is not limited to, the following:

1. Remove debris from inlets and the outlet structures on all BMPs.
2. Maintain storage capacity and operating condition of BMPs and stormwater conveyance system.

Detailed Maintenance Plan for Stormwater Controls

1. Detention Basin- The detention basin must be inspected as indicated below, and on an as needed basis when the original capacity has been reduced by 40%. Care should be exercised during basin drawdowns to prevent downstream discharge of sediments or anoxic water and slope stability caused by rapid drawdown. All basin structures expected to receive and/or trap debris and sediment must be inspected at least annually. Sediment removal should be conducted when the basins are completely dry. Sediment should be disposed of properly once sediment is removed. Disturbed areas need to be immediately stabilized and relegated. Mowing and trimming should be performed as necessary to maintain adequate stands of grass and to control weeds. Chemical weed control may be used if state and municipal regulations are met.. Vegetated areas shall be inspected annually for erosion and invasive species. Vegetated cover should be maintained at a minimum of 95%. If reduced by 10%, vegetation is to be reestablished. Anticipated personnel and equipment required: 1 laborer, 1 bobcat with operator, and 1 dump truck with driver.
2. Detention Basin Infiltration Zone- The infiltration basin must be inspected at least annually, and on an as needed basis. If upon inspection it is found that the infiltration zone of a basin is not infiltrating within the required 72 hours the infiltration zone of said basin should be rejuvenated. The basin should be drained by either opening the drain in the outlet structure or by use of a pump. Once all water is removed any sediment buildup or other debris found in the basin should be removed, and the basin bottom returned to its original design grade and plantings replaced. While working within the basin care should be taken to not overly compact the basin floor, so as not to additionally affect the infiltration rate of the soil. Once the previous steps are complete perform the following soil enhancement techniques:
    - Ripping (sub-soiling) should be performed using a solid-shank ripper and to a depth of 20 inches.
    - Spread 2-3 inches of approved compost on existing soil. Till added soil into existing soil with a rotary tiller that is set to a depth of 6 inches. Add an additional 4 inches of approved compost to bring the area up to grade.
    - Perform permanent seeding using detention basin mix as shown herein or equivalent.
3. Riprap Apron Outlet Protection / Dissipaters- Energy dissipaters shall be inspected annually. If riprap has been damaged, repairs should be made promptly to prevent a progressive failure. If repairs are needed repeatedly at one location, the site should be evaluated to determine if the original design conditions have changed.
4. Storm Sewer Inlets- Inlets are to be inspected annually and cleaned of debris as needed. Debris is to be disposed of at an approved off-site disposal facility. The inlets that have sump shall have all sediment/debris removed. A Vacuum Service Center may be hired to perform the cleaning.
5. Street Sweeping / Vacuuming - All streets are to be swept on a bi-yearly basis. Debris is to be disposed of at an approved off-site disposal facility. A street sweeper can be purchases from anywhere from $75,000-$150,000. For this reason we recommend that these services be contracted out to a third party. It is recommended that a Vacuum Filter type vehicle is used. The annual estimated maintenance cost, not including the disposal site fee is approximately $25.00 per curb mile. The estimated costs are based on The Pennsylvania Stormwater Best Management Practices Manual. (December 2006).

Recycling or Disposal of Materials

The BMPs will be continually inspected per the approved maintenance plan. **The Homeowner's Association will maintain written documentation of inspection and repair/replacement of BMPs.** The Homeowner's Association shall be responsible for the monitoring and maintenance of all BMPs. Sediment removed from BMPs will be mixed with other soils on the site or spread to dry in an area protected with filter fence and then seeded per permanent seeding specifications when dry. Any waste generated by the BMPs that is not biodegradable will be recycled or properly disposed of per all applicable laws and regulations. This could require the material be trucked from the site and disposed of at a DEP approved landfill site. Mechanics shall be in place during maintenance of the BMPs to control construction wastes, which include, but are not limited to, excess soil material, concrete wash water, sanitary wastes, etc. that could adversely impact water quality. Good housekeeping and material management shall be implemented. Ultimately the recycling of waste materials is preferred rather than the disposal where it is feasible.

Vegetative Practices

Fertilizing, seeding, and mulching will be used as both a temporary and a final erosion and sedimentation control measure. Grass mixtures are used according to permanent and temporary cover requirements. The temporary seed mix shall be used in all disturbed areas that will not be reworked within 4 days and during periods of the year when permanent seeding cannot be placed. **As disturbed areas within a project approach final grade, preparations should be made for seeding and mulching to begin (i.e. anticipate the completion date and schedule the seeder). In no case should an area 15,000 square feet, which is to be stabilized by vegetation, reach final grade without being seeded and mulched. Waiting until earthmoving is completed before making preparation for seeding and mulching is not acceptable.** Permanent seed mix shall be applied within 4 days after final grading has been accomplished. Apply slope seeding on slopes greater than 3V:1H. Refer to the modified version of PADEP E&S Manual Standard Worksheet #21 below for temporary and permanent seeding stabilization specifications.

(TEMPORARY) SPECIES: Perennial Ryegrass
% PURE LIVE SEED: 95 %
APPLICATION RATE: 40 LB./ACRE
FERTILIZER TYPE: 10-10-10 (X-X-X)
FERTILIZER APPL. RATE: 500 LB./ACRE
LIMING RATE: 1.0 T./ACRE
MULCH TYPE: Straw or Hay
MULCHING RATE: 3.0 T./ACRE

(PERMANENT) TOPSOIL PLACEMENT DEPTH: 4.0 IN.
SPECIES: Kentucky Bluegrass, (Perennial Ryegrass)
% PURE LIVE SEED: 85, (95) %
APPLICATION RATE 40, (19) LB./ACRE
FERTILIZER TYPE: 10-20-20 (X-X-X)
FERTILIZER APPL. RATE: 1000 LB./ACRE
LIMING RATE: 6.0 T./ACRE
MULCH TYPE: Straw or Hay
MULCHING RATE: 3.0 T./ACRE
ANCHOR MATERIAL: Nonasphaltic Emulsion (if necessary)
ANCHORING METHOD: Spray
RATE OF ANCHOR MATERIAL APPL.: 120 gallons per acre LB./ACRE
SEEDING SEASON DATES: March 15 to June 1 / Aug 1 to Oct. 15

(PERMANENT - TOPSOIL PLACEMENT DEPTH: 2.0 IN.
STEEP SLOPE) SPECIES: Birdsfoot Trefoil, (Tall Fescue)
% PURE LIVE SEED: 98, (95) %
APPLICATION RATE: 11, (40) LB./ACRE
FERTILIZER TYPE: 10-10-20 (X-X-X)
FERTILIZER APPL. RATE: 1000 LB./ACRE
LIMING RATE: 6.0 T./ACRE
MULCH TYPE: N/A
MULCHING RATE: N/A T./ACRE
EROSION CONTROL BLANKET TYPE: NAG S150BN or approved equal
ANCHOR MATERIAL: Nonasphaltic Emulsion (if necessary)
ANCHORING METHOD: Spray
RATE OF ANCHOR MATERIAL APPL.: 120 gallons per acre LB./ACRE
SEEDING SEASON DATES: March 15 to June 1 / Aug 1 to Oct. 15

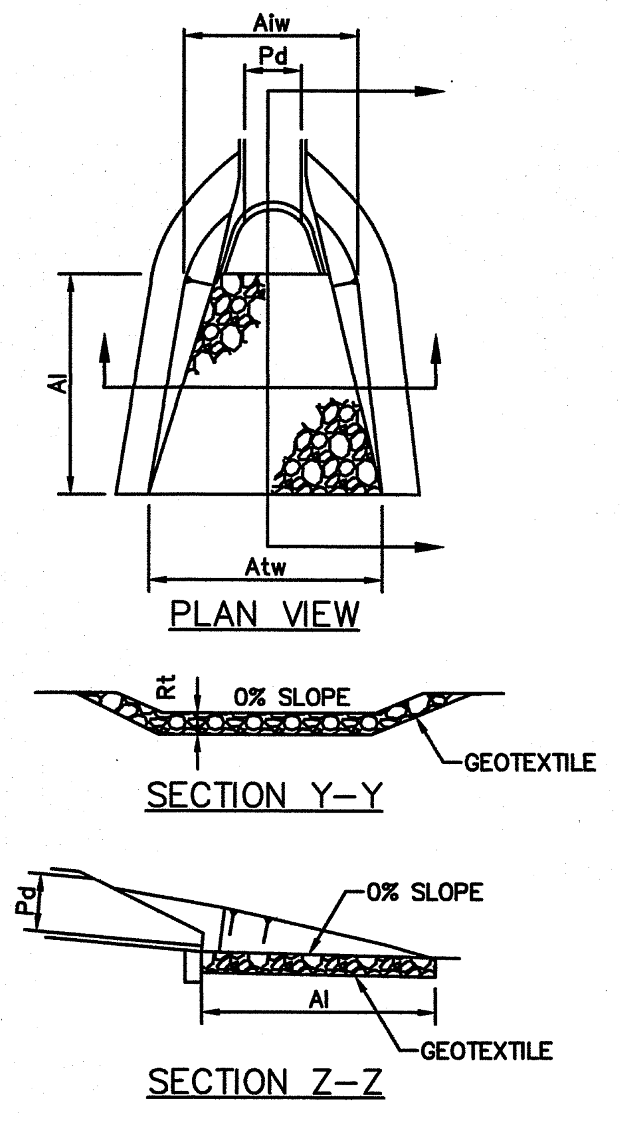

PLAN VIEW

SECTION Y-Y

SECTION Z-Z

OUTLET NO.	PIPE DIA Pd (IN)	RIPRAP		APRON		
		SIZE R-_	THICK. Rt (IN)	LENGTH Al (FT)	INITIAL WIDTH Aiw (FT)	TERMINAL WIDTH Atw (FT)
EW-101	15	R-3	9	9.00	3.75	12.75
EW-103	30	R-3	9	18.00	7.50	25.50
EW-203	30	R-5	27	24.00	7.50	31.50
EW-201	24	R-4	18	16.00	4.50	22.00

NOTES:

ALL APRONS SHALL BE CONSTRUCTED TO THE DIMENSIONS SHOWN. TERMINAL WIDTHS SHALL BE ADJUSTED AS NECESSARY TO MATCH RECEIVING CHANNELS.

ALL APRONS SHALL BE INSPECTED AT LEAST WEEKLY AND AFTER EACH RUNOFF EVENT. DISPLACED RIPRAP WITHIN THE APRON SHALL BE REPLACED IMMEDIATELY.

STANDARD CONSTRUCTION DETAIL #9-1
RIPRAP APRON AT PIPE OUTLET WITH FLARED END SECTION OR ENDWALL

PLAN BOOK	PAGE
434	10

MATTHEW B. SCHMIDT
ENGINEER No. PE079144

HAMPTON
TECHNICAL ASSOCIATES, INC.
ENGINEERING LAND SURVEYORS
ESTABLISHED 1960
www.Hampton-Technical.com
email@hampton-technical.com

☐ Corporate Office
Etna Technical Center
35 Wilson Street, Suite 201
Pittsburgh, PA 15223
PHONE: (412) 781-9660
FAX: (412) 781-5904

☒ Mars Office
123 Ridge Road, Suite B
Valencia, PA 16059
PHONE: (724) 625-4544
FAX: (724) 625-4549

DRAWN BY: JCC
CHECKED BY: SRF
APPROVED BY: MBS
CAD FILE: 22-6315-1 As-built

TITLE
The Plantations 1
Storm Sewer As-Built Details
Lancaster Township
Butler County, Pennsylvania

CLIENT
Brennan Builders, Inc.
800 S. Washington Street
Evans City, PA 16033

DATE ISSUED: 2023-10-05
HORIZONTAL SCALE:
VERTICAL SCALE:
SHEET: As-built.Det
HTA PROJECT #: 22-6315-1

N:\Master Job List\6300 Jobs\6315\2024-01-31\dwg\22-6315-1 AS-BUILT.dwg, As-Built Details, 10/31/2025 9:31 AM, Mark Lesnick

Instr: 202510310018162
Pgs: 1 F: $45.00 10/31/2025 12:03 PM
Michele Mustello T20250015238
Butler County Recorder PA

LOCATION MAP 1" = 2000'

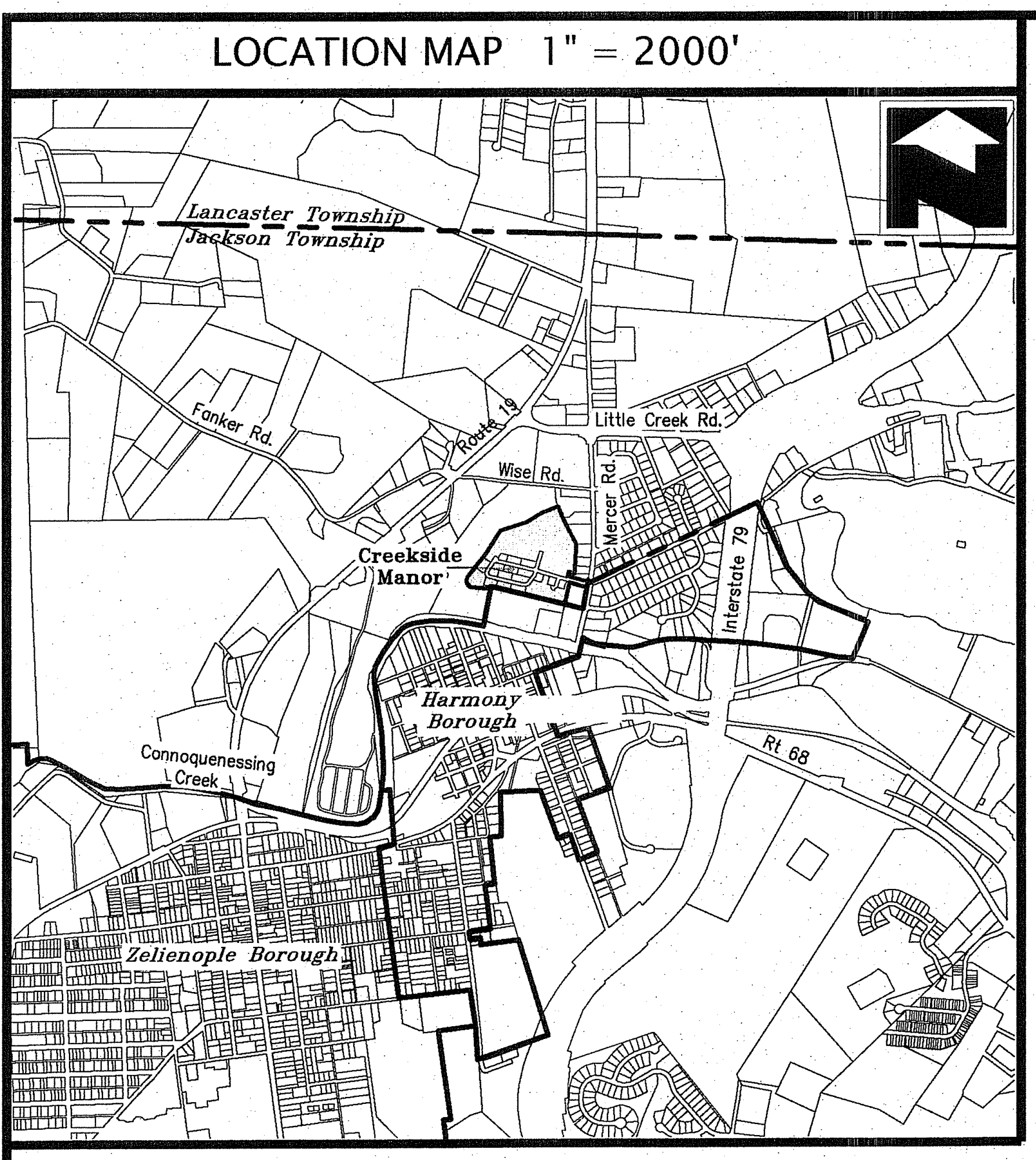

Lancaster Township
Jackson Township
Fanker Rd.
Route 19
Little Creek Rd.
Wise Rd.
Mercer Rd.
Interstate 79
Creekside Manor
Harmony Borough
Connoquenessing Creek
Rt 68
Zelienople Borough

Parcel Table – Original Lots

Unit Number	Lot Area (Sq.Ft.)	Lot Area (Acres)
Lot 206–R	10,877.55	0.250

Parcel Table – Proposed Lots/Units

Unit Number	Lot Area (Sq.Ft.)	Lot Area (Acres)
206R–A	2,504.505	0.057
206R–B	1,528.245	0.035
206R–C	1,528.242	0.035
206R–D	1,528.239	0.035
206R–E	3,788.319	0.087

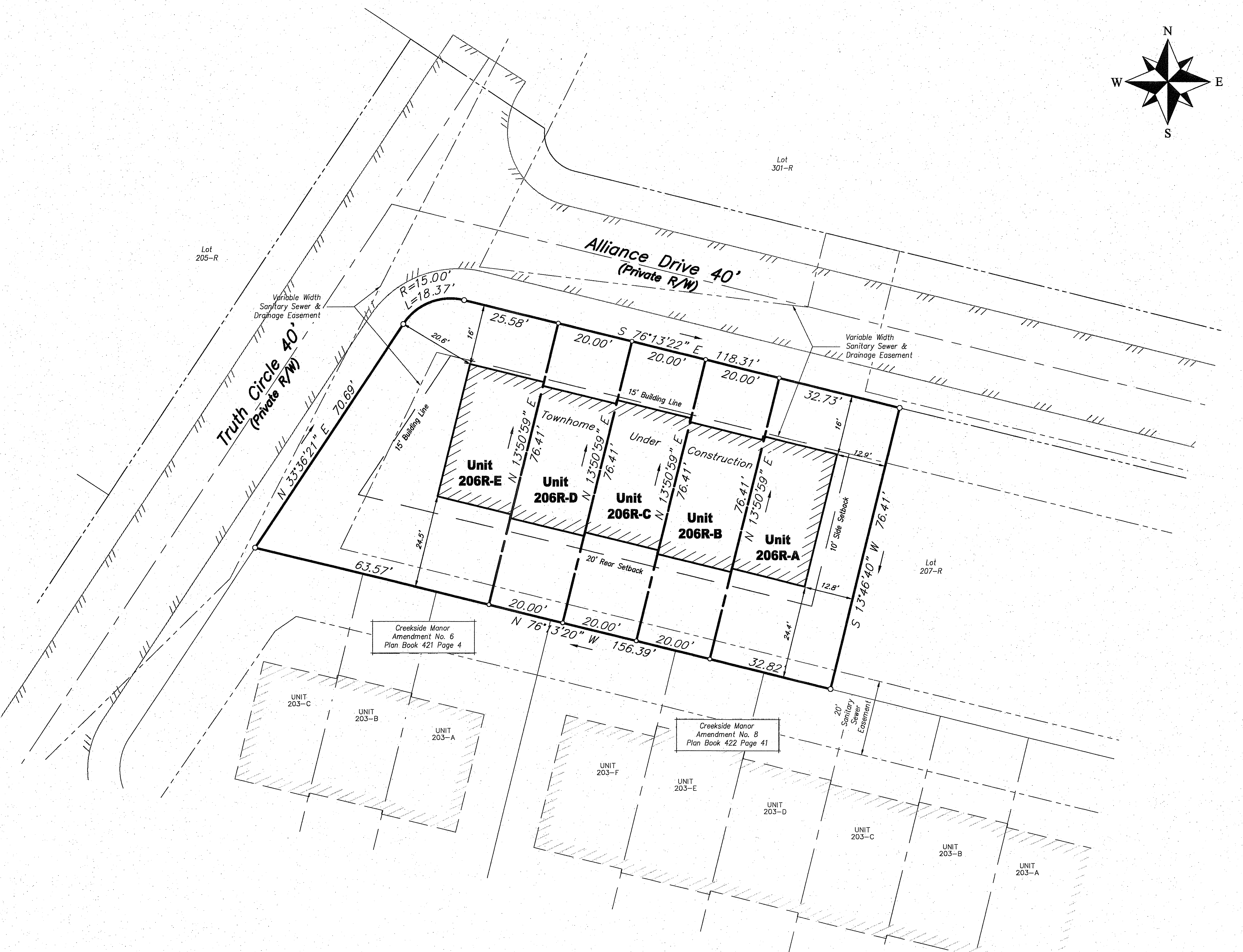

N
W
E
S
Lot 301–R
Lot 205–R
Lot 207–R
Alliance Drive 40'
(Private R/W)
Truth Circle 40'
(Private R/W)
Variable Width Sanitary Sewer & Drainage Easement
Variable Width Sanitary Sewer & Drainage Easement
R=15.00'
L=18.37'
25.58'
20.00'
20.00'
20.00'
32.73'
S 76°13'22" E 118.31'
20.6'
16'
16'
15' Building Line
15' Building Line
N 33°36'21" E 70.69'
Townhome Under Construction
Unit 206R-E
Unit 206R-D
Unit 206R-C
Unit 206R-B
Unit 206R-A
N 13°50'59" E 76.41'
N 13°50'59" E 76.41'
N 13°50'59" E 76.41'
N 13°50'59" E 76.41'
12.9'
12.8'
10' Side Setback
S 13°46'40" W 76.41'
24.5'
24.4'
20' Rear Setback
63.57'
20.00'
20.00'
20.00'
32.82'
N 76°13'20" W 156.39'
Creekside Manor Amendment No. 6 Plan Book 421 Page 4
Creekside Manor Amendment No. 8 Plan Book 422 Page 41
20' Sanitary Sewer Easement
UNIT 203–C
UNIT 203–B
UNIT 203–A
UNIT 203–F
UNIT 203–E
UNIT 203–D
UNIT 203–C
UNIT 203–B
UNIT 203–A

Tabulation of Zoning Data at time of master plan approval.

Affected Zoning District : V-TND - Village Traditional Neighborhood Development

	Required	Provided on Master Plan	Provided on This Plan	Reference
Minimum Lot Size (Per Lot)	6000.00 sf	7083.89 sf	1,528.242 sf	(1)
Minimum Lot Width at Street Right of Way Line:	55.00 ft	76.40 ft	20.00 ft	(1)
Minimum Lot Width at Front Buiding Setback Line:	55.00 ft	68.00 ft	20.00 ft	
Minimum Front Yard Setback	15.00 ft	15.00 ft	15.00 ft	(2)
	5.00 ft	5.00 ft	5.00 ft	
Minimum Side Yard Setback (At End Dwelling Units):	10.00 ft	10.00 ft	10.00 ft	
	5.00 ft	5.00 ft	5.00 ft	
Minimum Distance Between Primary Buildings:	30.00 ft	20 ft	20 ft	

*Modification Granted for Building Separation as part of overall PRD Approval.

(1) Minimum on master plan referred to lot prior to subdivsion and not per unit
(2) From right of way line

Waivers granted on master plan that affect townhome construction:

§ 27-1208.D (2)(b): A waiver from this section to allow for the construction of decks/patios to protrude a perpendicular distance of no greater than 8.00' into the allowable rearyard of the townhome structure. Townhome structure building faces would remain compliant with the existing 20 foot rear setback.

All other waivers associated with site improvements not associated with the construction of a townhome lot can be found on Sheet S-200 of the Creekside Manor Phase 1 Plan of Lots as recorded in Plan Book 405, Pages 12-14.

GRAPHIC SCALE

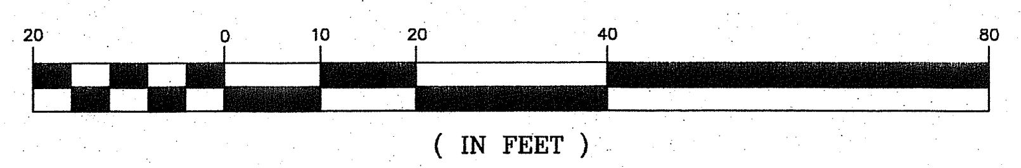

20
0
10
20
40
80

(IN FEET)
1 inch = 20 ft.

General Plan Notes

a. *This plan is a re-subdivision of Lot 206-R of the Creekside Manor TND - 3 Planned Residential Development - Phase 2 Revised as recorded in Plan Book 429, Pages 23-24.*
b. *No additional units are proposed that were not originally planned for.*
c. *This plan is subject to any and all conditions of the previously approved and recorded plans.*
d. *If applicable, bearings labeled as (NR) are non-radial to the intersecting right of way line.*

Property References

Ownership Reference:
Lot 105
Tax Parcel 180-S14-B206
Instrument # 202507020010145

D·R·HORTON
America's Builder

Property Owner:
D.R. Horton - WPA, LLC
1603 Carmondy Court
Suite 300
Sewickley, PA 15143
412-218-4384

Drawing Number	*1009-2528077*
Drawing Scale	*1"=20'*
Date	*July 24, 2025*
Drawn By	
Revsions	

73000

Creekside Manor Amendment 13

Being a Re-subdivision of Lot 206-R of the
Creekside Manor TND - 3 Planned Residential Development
Phase 2 Revised as recorded in Plan Book 429, Pages 23-24
Jackson Township, Butler County, Pennsylvania

Sperdute Land Surveying
A Division of Sheffler & Company
441 Mars-Valencia Rd, Suite 3C
Valencia, PA 16059

108 Deer Lane
Harmony, PA 16037

1712 Mount Nebo Road
Sewickley, PA 15143

724-452-4362 Info@SperduteSurveying.com
James A. Sperdute, RS # 24457-E

PLAN BOOK	PAGE
434	11

D.R. Horton - WPA, LLC

By a resolution approved on the 23rd day of October, 20 25, the Board of Directors of the **D.R. Horton - WPA, LLC** , A Deleware Limited Liability Company, owners of the land shown on the **Creekside Manor Amendment No. 13,** adopted this plan as its plan of lots and irrevocably dedicated all streets and other property identified for dedication on the plan to Jackson Township. This adoption and dedication shall be binding upon the corporation and upon its successors and assigns.

D.R. Horton - WPA, LLC

Signature of Officer Witnessing

BRIAN SCHEETZ, CITY MANAGER
Printed Name & Title of Officer Witnessing

Signature of Authorized Officer

LORI SUE DEAL-ASSISTANT SECRETARY
Printed Name & Title of Authorized Officer

Before me, the undersigned Notary Public in and for the Commonwealth of Pennsylvania and County of Allegheny personally appeared Lori Sue Deal of **D.R. Horton - WPA, LLC** who stated that (he/she) is authorized to execute the above adoption and dedication on behalf of the corporation and was present at the meeting at which the action of the corporation was taken to adopt the plan and dedicate public property contained therein to Jackson Township.

Witness my hand and notarial seal this 23rd day of October, 20 25.

My commission expires the 28th day of August, 20 27.

(Seal) Notary Public

Commonwealth of Pennsylvania - Notary Seal
DAVID BERECK - Notary Public
Allegheny County
My Commission Expires August 28, 2027
Commission Number 1438332

I hereby certify that the title to the property contained in the **Creekside Manor Amendment No. 13** is in the name of **D.R. Horton - WPA, LLC** and is recorded at **Instrument No.202507020010145.** I further certify that there is no mortgage, lien, or other encumbrance against this property.

Witness

Signature of Authorized Officer

Surveyor

I hereby certify that, to the best of my information, knowledge and belief, the survey and plan shown hereon are correct and accurate to the standards required by the ordinances of Jackson Township.

10-23-25
Date

James A. Sperdute, RS # 24457-E

JAMES ANTHONY SPERDUTE
No.SL024457E

Registered Surveyor

Jackson Township Planning Director/Manager

Jackson Township agrees not to issue building permits until the "Planning Module for Land Development" has been approved in accordance with the regulations of the Pennsylvania Department of Environmental Protection.

10/31/2025
Date

Township Manager/Secretary

Approved by the Planning Director of Jackson Township this 30th day of July, 20 25, pursuant to Chapter 22, Subdivision and Land Development, of the Code of Jackson Township, as amended. The Planning Director of Jackson Township gives notice that in approving this plan for recording Jackson Township assumes no obligation to accept the dedication of any streets, land or public facilities and has no obligation to improve or maintain such streets, land or facilities.

Township Secretary

Nikki Colton
Planning Director

Jackson Township Board of Supervisors

Approved by the Board of Supervisors of Jackson Township this 30th day of July, 20 25. The Board of Supervisors of Jackson Township gives notice that in approving this plan for recording Jackson Township assumes no obligation to accept the dedication of any streets, land or public facilities and has no obligation to improve or maintain such streets, land or facilities.

Township Secretary

Chairperson

Jackson Township Board of Supervisors

This plat was delivered to applicant by Jackson Township on the 31st day of October 20 25.

Township Manager/Secretary

Butler County Planning Commission

Reviewed by the Butler County Planning Commission on this 20 day of August, 20 25.

Ron Henshaw VP
Secretary

Jesse Hines VP
Chairperson

Plan # 25171

Butler County Planning Commission

Butler County Recorder of Deeds

Recorded in the office of the Recorder of Deeds of Butler County, Commonwealth of Pennsylvania, in Plan Book Volume 434, page(s) 11.

Given under my hand and seal this 31st day of October, 20 25.

Michele M. Mustello
Recorder of Deeds

MICHELE M. MUSTELLO
RECORDER OF DEEDS
My Commission Expires First Monday in January 2028

Butler County Recorder of Deeds

Instr: 202511030018248
11/3/2025 11:02 AM
Pgs: 2 F: $85.00
T20250015306
Michele Mustello
Butler County Recorder PA

OWNER'S ADOPTION AND DEDICATION

We, owners or beneficial owners of the land shown on the Ronald & Judy Double Plan No. 2, hereby adopt this plan as our plan of lots and irrevocably dedicate all streets and other property identified for dedication on the plan to the Township of Jackson. This adoption and dedication shall be binding upon our heirs, executors, and assigns.

IN WITNESS OF WHICH, to this WE set our hand and seal this 22nd day of October 2025.

ATTEST:

Witness
Signature of owner
Signature of owner

ACKNOWLEDGMENT OF NOTARY PUBLIC

COMMONWEALTH OF PENNSYLVANIA }
}SS
COUNTY OF ALLEGHENY }

Before me, the undersigned Notary Public in and for the Commonwealth of Pennsylvania and County of Allegheny, personally appeared the above named Ronald L. and Judy A. Double, and acknowledged the foregoing adoption and dedication to be their act.

Witness my hand and notarial seal this 22nd day of October, 2025. My commission expires the 23 day of March, 2029.

COMMONWEALTH OF PENNSYLVANIA - NOTARY SEAL
Laura Koyack, Notary Public
Allegheny County
My Commission Expires 3/23/2029
Commission # 1308528

(Seal)
Notary Public

CERTIFICATION OF TITLE AND NO MORTGAGE

We hereby certify that the title to the property contained in the Ronald & Judy Double Plan No. 2 is in the name of Ronald L. and Judy A. Double and is recorded in PBV 432 PG. 5 & 6. We further certify that there is no mortgage, lien, or other encumbrance against this property.

Witness
Owner

SURVEYOR'S CERTIFICATE

I, Matthew W. Stahlman, a Registered Surveyor of the State of Pennsylvania, do hereby certify that this plan correctly represents the lots, lands, streets and highways as surveyed and plotted by me for the owners or agents.

(Surveyor) Registration No. SU-075485
Date 10-20-2025

MUNICIPAL DECLARATIONS

No Building Permits Without Approved Sewage Facilities

The Township of Jackson agrees not to issue building permits until the "Planning Module for Land Development" has been approved in accordance with the regulations of the Pennsylvania Department of Environmental Protection.

Date
Township Manager/Secretary

Township Board of Supervisors

Approved by the Board of Supervisors of Jackson Township this 16th day of October, 2025. The Board of Supervisors of Jackson Township gives notice that in approving this plan for recording Jackson Township assumes no obligation to accept the dedication of any streets, land or public facilities and has no obligation to improve or maintain such streets, land or facilities.

Township Secretary
Chairperson

APPROVAL BY JACKSON TOWNSHIP PLANNING DIRECTOR

Approved by the Planning Director of Jackson Township this 8th day of October, 2025, pursuant to Chapter 22, Subdivision and Land Development, of the Code of Jackson Township, as amended. The Planning Director of Jackson Township gives notice that in approving this plan for recording Jackson Township assumes no obligation to accept the dedication of any streets, land or public facilities and has no obligation to improve or maintain such streets, land or facilities.

Township Secretary
Nikki Colton
Planning Director

BUTLER COUNTY PLANNING COMMISSION REVIEW

Reviewed by the Butler County Planning Commission on this 15th day of October, 2025.

R. Henshaw MKG
Secretary
J. Hines MKG
Chairperson

Plan # 25219

PROOF OF RECORDING

COMMONWEALTH OF PENNSYLVANIA }
}SS
COUNTY OF BUTLER }

Recorded in the Office for the Recording of Deeds, Plats, etc., in said County, in Instrument Id 202511030018248 BK 434 PG 12-13

Given under my hand and seal this 3rd day of November, 2025.

MICHELE M. MUSTELLO
RECORDER OF DEEDS
Recorder of Deeds

My Commission Expires First Monday In January 2028

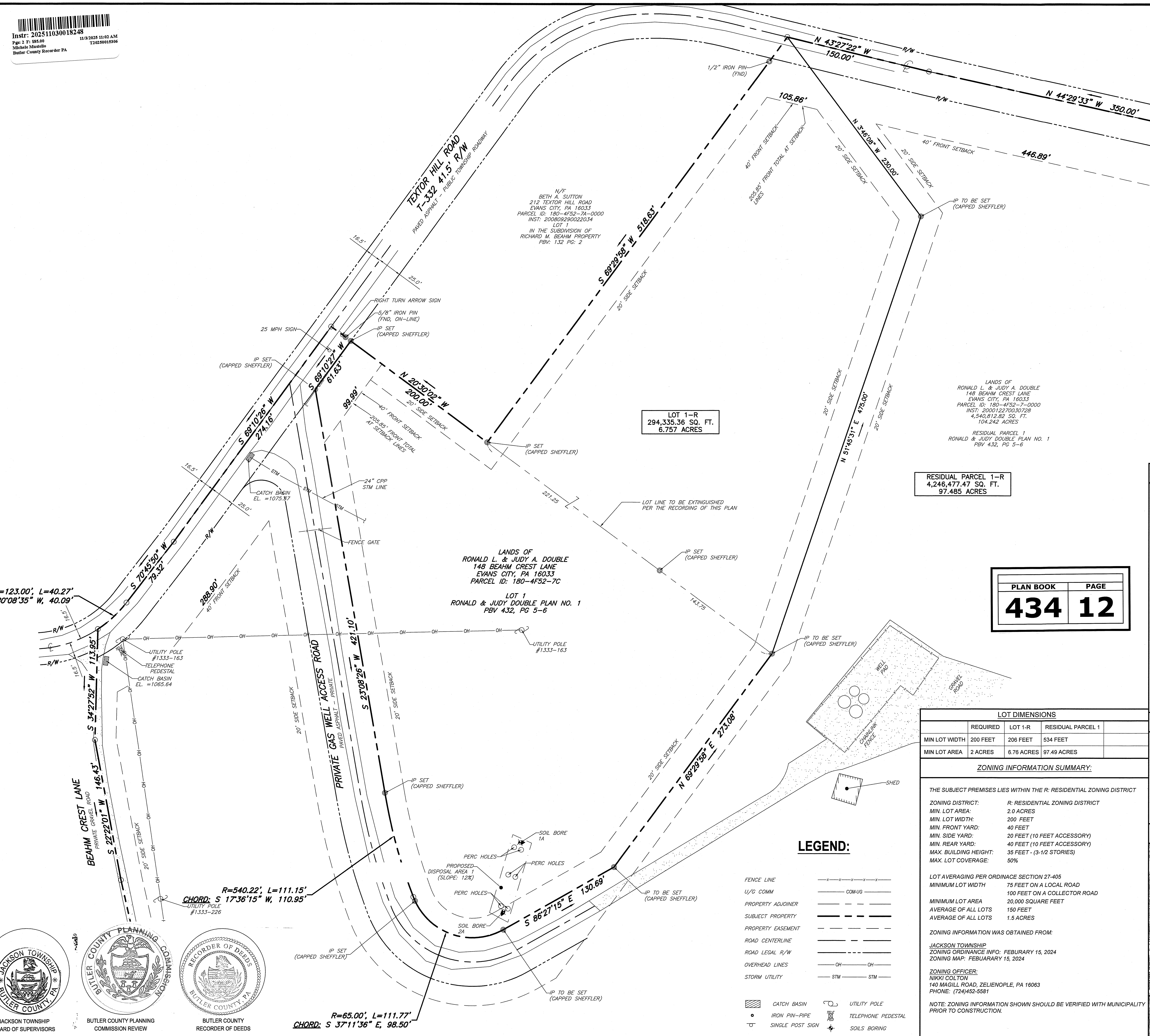
TEXTOR HILL ROAD
T-332 41.5' R/W
PAVED ASPHALT - PUBLIC TOWNSHIP ROADWAY
N 43°27'22" W
150.00'
R/W
N 44°29'33" W 350.00'
N 52°35'41" W
39.92'
1/2" IRON PIN (FND)
1/2" IRON PIN (FND, PINFLAG)
105.86'
40' FRONT SETBACK
205.85' FRONT TOTAL AT SETBACK LINES
20' SIDE SETBACK
N 3°46'08" W 230.00'
446.89'
IP TO BE SET (CAPPED SHEFFLER)
264.71'
N 57°52'24" E
N/F
BETH A. SUTTON
212 TEXTOR HILL ROAD
EVANS CITY, PA 16033
PARCEL ID: 180-4F52-7A-0000
INST: 200809290022034
LOT 1
IN THE SUBDIVISION OF
RICHARD M. BEAHM PROPERTY
PBV: 132 PG: 2
S 69°29'58" W 518.63'
N/F
ROBERT H. & JOYCE G. BURR
242 TEXTOR HILL ROAD
EVANS CITY, PA 16033
PARCEL ID: 180-4F52-7B-0000
INST: 200009070021032
LOT 2
IN THE SUBDIVISION OF
RICHARD M. BEAHM PROPERTY
PBV: 132 PG: 2
16.5'
25.0'
RIGHT TURN ARROW SIGN
5/8" IRON PIN (FND, ON-LINE)
IP SET (CAPPED SHEFFLER)
25 MPH SIGN
S 69°10'27" W
61.63'
S 69°10'26" W
274.16'
N 20°30'02" W
200.00'
99.99'
40' FRONT SETBACK
205.85' FRONT TOTAL AT SETBACK LINES
LOT 1-R
294,335.36 SQ. FT.
6.757 ACRES
N 51°45'31" E 475.00'
LANDS OF
RONALD L. & JUDY A. DOUBLE
148 BEAHM CREST LANE
EVANS CITY, PA 16033
PARCEL ID: 180-4F52-7-0000
INST: 200012270030728
4,540,812.82 SQ. FT.
104.242 ACRES
RESIDUAL PARCEL 1
RONALD & JUDY DOUBLE PLAN NO. 1
PBV 432, PG 5-6
RESIDUAL PARCEL 1-R
4,246,477.47 SQ. FT.
97.485 ACRES
CATCH BASIN EL. =1075.37
24" CPP STM LINE
STM
221.25
LOT LINE TO BE EXTINGUISHED PER THE RECORDING OF THIS PLAN
R/W
FENCE GATE
S 70°45'50" W
79.32'
288.90'
40' FRONT SETBACK
R=123.00', L=40.27'
CHORD: S 80°08'35" W, 40.09'
LANDS OF
RONALD L. & JUDY A. DOUBLE
148 BEAHM CREST LANE
EVANS CITY, PA 16033
PARCEL ID: 180-4F52-7C
LOT 1
RONALD & JUDY DOUBLE PLAN NO. 1
PBV 432, PG 5-6
143.75
IP SET (CAPPED SHEFFLER)
OH
UTILITY POLE #1333-163
TELEPHONE PEDESTAL
CATCH BASIN EL. =1065.64
S 34°27'52" W 113.95'
PRIVATE GAS WELL ACCESS ROAD
PAVED ASPHALT - PRIVATE
S 23°08'26" W 421.10'
IP TO BE SET (CAPPED SHEFFLER)
WELL PAD
GRAVEL ROAD
CHAINLINK FENCE
SHED
BEAHM CREST LANE
PRIVATE GRAVEL ROAD
S 22°22'01" W 146.43'
20' SIDE SETBACK
R=540.22', L=111.15'
CHORD: S 17°36'15" W, 110.95'
UTILITY POLE #1333-226
SOIL BORE 1A
PERC HOLES
PROPOSED DISPOSAL AREA 1 (SLOPE: 12%)
SOIL BORE 2A
S 86°27'15" E 130.69'
N 69°29'58" E 273.08'
IP TO BE SET (CAPPED SHEFFLER)
R=65.00', L=111.77'
CHORD: S 37°11'36" E, 98.50'

LEGEND:

FENCE LINE	—x—x—x—x—x—
U/G COMM	—— COM-UG ——
PROPERTY ADJOINER	
SUBJECT PROPERTY	
PROPERTY EASEMENT	
ROAD CENTERLINE	
ROAD LEGAL R/W	
OVERHEAD LINES	—— OH —— OH ——
STORM UTILITY	—— STM —— STM ——

▨	CATCH BASIN		UTILITY POLE
●	IRON PIN-PIPE	TELE ☒ PED	TELEPHONE PEDESTAL
	SINGLE POST SIGN	⌖	SOILS BORING

PLAN BOOK	PAGE
434	12

GENERAL NOTES:

1. THE PURPOSE OF THIS PLAN IS A LOT LINE REVISION TO LOT 1 IN THE RONALD & JUDY DOUBLE PLAN NO. 1 (TAX MAP 180-4F52-7C) OWNED BY RONALD L. & JUDY A. DOUBLE RECORDED IN PBV:432 PG. 5-6.
INTO (2 TRACTS OF LAND) RESIDUAL PARCEL 1-R TO BE RETAINED, & LOT 1-R TO BE RETAINED.

2. MERIDIAN SHOWN HEREON IS BASED ON GRID NORTH PER GPS OBSERVATIONS CONDUCTED IN THE PENNSYLVANIA SOUTH STATE PLANE COORDINATE SYSTEM (NAD83).

3. IRON REBAR "11786-E" TO BE SET AT CORNERS BETWEEN LOT 1-R , & RESIDUAL PARCEL 1-R.

4. THIS PLAN DOES NOT REPRESENT ALL IMPROVEMENTS THAT MAY AFFECT RESIDUAL PARCEL 1.

5. BY GRAPHIC PLOTTING ONLY, THE SUBJECT PREMISES LIES WITHIN FLOOD ZONE X-OTHER AREAS, AS SHOWN ON FEMA FIRM MAP COMMUNITY PANEL NO. 42019C0387D, BEARING AN EFFECTIVE DATE OF 08/02/2018. ZONE X-OTHER DENOTES AREAS DETERMINED TO BE OUTSIDE THE 0.2% ANNUAL CHANCE FLOODPLAIN.

6. AREAS THAT ARE RESERVED FOR REPLACEMENT ABSORPTION AREAS IN THE EVENT THE PRIMARY ONLOT SYSTEM AREA FAILS ARE NOT BE TO DISTURBED.

7. DEEDS SHALL BE PREPARED AND RECORDED FOR THE TWO LOTS INVOLVED IN THE SUBDIVISION PLAN.

8. THE APPLICANT SHALL RECORD COVENANTS THAT RESTRICT FUTURE SUBDIVISION OF THE PARCELS WHERE SUCH SUBDIVISION WOULD PLACE A LOT OR LOTS THAT WERE APPROVED IN THE SUBDIVISION IN VIOLATION OF THE STANDARDS SET FORTH IN SECTION 27-405 OF THE JACKSON TOWNSHIP ZONING ORDINANCE AT THE TIME OF PLAN RECORDATION.

LOT DIMENSIONS

	REQUIRED	LOT 1-R	RESIDUAL PARCEL 1	
MIN LOT WIDTH	200 FEET	206 FEET	534 FEET	
MIN LOT AREA	2 ACRES	6.76 ACRES	97.49 ACRES	

ZONING INFORMATION SUMMARY:

THE SUBJECT PREMISES LIES WITHIN THE R: RESIDENTIAL ZONING DISTRICT

ZONING DISTRICT:	R: RESIDENTIAL ZONING DISTRICT
MIN. LOT AREA:	2.0 ACRES
MIN. LOT WIDTH:	200 FEET
MIN. FRONT YARD:	40 FEET
MIN. SIDE YARD:	20 FEET (10 FEET ACCESSORY)
MIN. REAR YARD:	40 FEET (10 FEET ACCESSORY)
MAX. BUILDING HEIGHT:	35 FEET - (3-1/2 STORIES)
MAX. LOT COVERAGE:	50%

LOT AVERAGING PER ORDINACE SECTION 27-405

MINIMUM LOT WIDTH	75 FEET ON A LOCAL ROAD 100 FEET ON A COLLECTOR ROAD
MINIMUM LOT AREA	20,000 SQUARE FEET
AVERAGE OF ALL LOTS	150 FEET
AVERAGE OF ALL LOTS	1.5 ACRES

ZONING INFORMATION WAS OBTAINED FROM:

JACKSON TOWNSHIP
ZONING ORDINANCE INFO: FEBURARY 15, 2024
ZONING MAP: FEBUARARY 15, 2024

ZONING OFFICER:
NIKKI COLTON
140 MAGILL ROAD, ZELIENOPLE, PA 16063
PHONE: (724)452-5581

NOTE: ZONING INFORMATION SHOWN SHOULD BE VERIFIED WITH MUNICIPALITY PRIOR TO CONSTRUCTION.

AREA TABULATION:

EXISTING TAX PARCELS:

180-4F52-7C-0000	3.550 ACRES - (154,653.08 SQ. FT.)
180-4F52-7-0000	100.692 ACRES - (4,386,159.74 SQ. FT.)
TOTAL	104.242 ACRES - (4,540,812.82 SQ. FT.)

PROPOSED PARCELS:

RESIDUAL PARCEL 1-R	97.485 ACRES - (4,246,477.47 SQ. FT.)
LOT 1-R	6.757 ACRES - (294,335.36 SQ. FT.)
TOTAL	104.242 ACRES - (4,540,812.82 SQ. FT.)

Site Location Map: USGS Evans City, PA
Scale: 1"=2000'

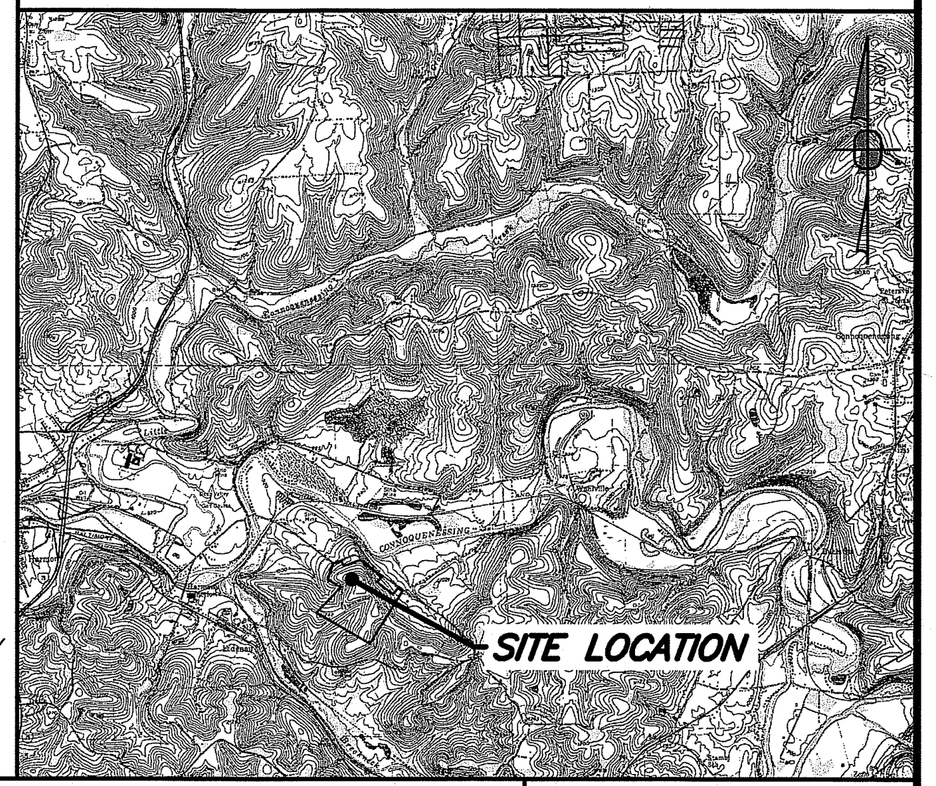
SITE LOCATION

MATTHEW W. STALHMAN
No. SU075485

SURVEYOR
JACKSON TOWNSHIP ENGINEER
JACKSON TOWNSHIP PLANNING DIRECTOR
JACKSON TOWNSHIP BOARD OF SUPERVISORS
BUTLER COUNTY PLANNING COMMISSION REVIEW
BUTLER COUNTY RECORDER OF DEEDS

811 Know what's **below.** **Call** before you dig.

POCS SER. #:

THE LOCATIONS OF EXISTING UNDERGROUND UTILITIES ARE SHOWN IN AN APPROXIMATE WAY ONLY AND HAVE NOT BEEN INDEPENDENTLY VERIFIED BY THE OWNER OR ITS REPRESENTATIVE. THE CONTRACTOR SHALL DETERMINE THE EXACT LOCATION OF ALL EXISTING UTILITIES BEFORE COMMENCING WORK, AND AGREES TO BE FULLY RESPONSIBLE FOR ANY AND ALL DAMAGES WHICH MIGHT BE OCCASIONED BY THE CONTRACTOR'S FAILURE TO EXACTLY LOCATE AND PRESERVE ANY AND ALL UNDERGROUND UTILITIES.

NORTH

Horizontal Scale
0 50' 100'
(Feet)
1 inch = 50 ft.

Date:	Revision Description:	By:
10-3-2025	Revised per comments from Jackson Township	MWS
10-6-2025	Revised per comments from Butler County Planning	MWS

Prepared By:

Sheffler & Company, Inc.
ENGINEERING • SURVEYING

1712 Mount Nebo Road
Sewickley, PA 15143

Office Phone: 412-219-4509
Email: Info@ShefflerCo.com

Ronald & Judy Double Plan No. 2

Prepared For:
Nicole Double

Situate In:
Jackson Township, Butler County, PA

Being a Lot Line Revision Plan of Butler County
Tax Map Parcel ID Nos. 180-4F52-7-0000 & 180-4F52-7C

Attn: Nicole Double
148 Beahm Crest Lane
Evans City, PA 16033
Phone: (419) 908-8781

DRAWING SCALE: As Shown	DRAWN BY: AMS
DATE ISSUED: Sept. 15, 2025	REVIEWED BY: MWS
PROJECT JOB#: 5372	FIELD BOOK #: 5372
CADD#: 5372 148 BEAHM CREST LOT LINE REVISION.DWG	

Sheet No.
1 of 2

J:\SHEFFLER PROJECT FILES\JOBS 5300-5399\5372 - 148 BEAHM CREST LANE, EVANS CITY\DRAWINGS\SURVEY\5372 148 BEAHM CREST LOT LINE REVISION.DWG
PLOT DATE: 10/20/2025 9:01:32 AM

TEXTOR HILL ROAD
T-332 41.5' R/W
PAVED ASPHALT - PUBLIC TOWNSHIP ROADWAY
N 43°27'22" W
150.00'
R/W
N 44°29'33" W 350.00'
N 52°35'41" W
39.92'
N 52°05'22" W
63.49'
1/2" IRON PIN (FND)
N 3°46'08" W
230.00'
40' FRONT SETBACK
20' SIDE SETBACK
40' FRONT SETBACK
205.85' FRONT TOTAL AT SETBACK LINES
IP TO BE SET (CAPPED SHEFFLER)
N/F
BETH A. SUTTON
212 TEXTOR HILL ROAD
EVANS CITY, PA 16033
PARCEL ID: 180-4F52-7A-0000
INST: 200809290022034
LOT 1
IN THE SUBDIVISION OF
RICHARD M. BEAHM PROPERTY
PBV: 132 PG: 2
S 69°29'58" W 518.63'
5/8" IRON PIN (FND, ON-LINE)
S 69°10'27" W 61.63'
IP SET (CAPPED SHEFFLER)
N 20°30'02" W
200.00'
LOT 1-R
294,335.36
SQ. FT.
6.757 ACRES
1/2" IRON PIN (FND, PINFLAG)
264.71'
N 57°52'24" E
N/F
ROBERT H. & JOYCE G. BURR
242 TEXTOR HILL ROAD
EVANS CITY, PA 16033
PARCEL ID: 180-4F52-7B-0000
INST: 200009070021032
LOT 2
IN THE SUBDIVISION OF
RICHARD M. BEAHM PROPERTY
PBV: 132 PG: 2
1/2" IRON PIN (FND)
S 0°01'19" E
312.29'
1/2" IRON PIN (FND W/CAP LSI)
N 52°35'41" W 609.43'
20' SIDE SETBACK
LANDS OF
RONALD L. & JUDY A. DOUBLE
148 BEAHM CREST LANE
EVANS CITY, PA 16033
PARCEL ID: ______________
LOT 1
RONALD & JUDY DOUBLE PLAN NO. 1
PBV 432, PG 5-6
S 69°10'26" W
274.16'
R=123.00', L=40.27'
CHORD: S 80°08'35" W, 40.09'
S 70°45'50" W
79.32'
R/W
40' FRONT SETBACK
FENCE GATE
LOT LINE TO BE EXTINGUISHED PER THE RECORDING OF THIS PLAN
N 51°45'31" E 475.00'
PRIVATE GAS WELL ACCESS ROAD
PAVED ASPHALT - PRIVATE
S 23°08'26" W 421.10'
S 34°27'52" W
113.95'
IP SET (CAPPED SHEFFLER)
IP TO BE SET (CAPPED SHEFFLER)
WELL PAD
CHAINLINK FENCE
GRAVEL ROAD
SHED
N 69°29'58" E 273.08'
SOIL BORE 1A
BEAHM CREST LANE
PRIVATE GRAVEL ROAD
S 22°22'01" W
146.43'
S 20°16'55" W
215.49'
L=111.15'
R=540.22'
S 86°27'15" E 130.69'
SOIL BORE 2A
L=111.77'
R=65.00'
N/F
JOHN O. BAME
1 BAME CAMP LANE
EVANS CITY, PA 16033
PARCEL ID: 180-4F52-5-0000
INST: 201603280005536
S 17°13'55" W
64.50'
S 5°26'50" W
26.14'
S 10°51'56" E
24.32'
S 24°59'50" E
36.33'
164.26'
S 42°55'08" E
S 70°55'08" E 280.00'
S 20°09'08" E
92.74'
N/F
DAMON A. & AVA L. SMITH
118 BEAHM CREST LANE
EVANS CITY, PA 16033
PARCEL ID: 180-4F52-6BA-0000
INST: 201801170000977
RESIDUAL PARCEL 1-R
4,246,477.47 SQ. FT.
97.485 ACRES
LANDS OF
RONALD L. & JUDY A. DOUBLE
148 BEAHM CREST LANE
EVANS CITY, PA 16033
PARCEL ID: 180-4F52-7-0000
INST: 200012270030728
4,540,812.82 SQ. FT.
104.242 ACRES
RESIDUAL PARCEL 1
RONALD & JUDY DOUBLE PLAN NO. 1
PBV 432, PG 5-6
N/F
STACI KUSHNER
TEXTOR HILL ROAD
EVANS CITY, PA 16033
PARCEL ID: 180-4F52-14AA-0000
INST: 202304190005262
LOT 2
PLAN OF SUBDIVISION
FOR CARL F. & LOIS J. ROBERTSON
PBV: 406 PG: 27
N/F
CARL F. & LOIS J. ROBERTSON
300 TEXTOR HILL ROAD
EVANS CITY, PA 16033
PARCEL ID: 180-4F52-14A-0000
INST: 202007310015380
LOT 1
PLAN OF SUBDIVISION
FOR CARL F. & LOIS J. ROBERTSON
PBV: 406 PG: 27
N 0°43'16" W 2678.50'
20' SIDE SETBACK
N/F
MICHAEL A. & AMY G. DELUCIA
310 TEXTOR HILL ROAD
EVANS CITY, PA 16033
PARCEL ID: 180-4F52-14AB-0000
INST: 202304190005261
LOT 3
PLAN OF SUBDIVISION
FOR CARL F. & LOIS J. ROBERTSON
PBV: 406 PG: 27
GRAVEL ROAD
N/F
C. MELVIN & IRENE G. SMITH
126 BEAHM CREST LANE
EVANS CITY, PA 16033
PARCEL ID: 180-4F52-6B-0000
DBV: 1097 PG: 0870
S 48°41'52" W 1236.45'
20' SIDE SETBACK
SHED
BARN
HOUSE 1
HOUSE 2
CENTER OF SEPTIC AREA 1 (LOCATED BY OWNER)
CENTER OF SEPTIC AREA 2 (LOCATED BY OWNER)
N/F
EVANS CITY SPORTMANS CLUB
323 TEXTOR SCHOOL ROAD
EVANS CITY, PA 16033
PARCEL ID: 180-4F52-14-0000
DBV: 0624 PG: 0009
N/F
MADISON G. & NICHOLAS J.
DESTEFANO
122 BEAHM CREST LANE
EVANS CITY, PA 16033
PARCEL ID: 180-4F52-6BB-0000
INST:202112210035217
LOT 1
IN THE C. MELVIN SMITH
PLAN OF LOTS
PBV: 123 PG: 2
N/F
MARY CORSO
TEXTOR SCHOOL ROAD
EVANS CITY, PA 16033
PARCEL ID: 180-4F52-8-0000
INST: 201212280037277
LOT 2
MARTINKOVICH SUBDIVISION PLAN
PBV: 317 PG: 15
N/F
RONALD J. & LORRAINE M. STAUB
235 TEXTOR SCHOOL ROAD
EVANS CITY, PA 16033
PARCEL ID: 180-4F52-8D-0000
DBV: 2404 PG: 0947
WELL PAD
40' REAR SETBACK
3/4" IRON PIN (FND)
S 58°01'54" E 1540.32'

PLAN BOOK	PAGE
434	13

811 Know what's **below.** **Call** before you dig.

POCS SER. #:

THE LOCATIONS OF EXISTING UNDERGROUND UTILITIES ARE SHOWN IN AN APPROXIMATE WAY ONLY AND HAVE NOT BEEN INDEPENDENTLY VERIFIED BY THE OWNER OR ITS REPRESENTATIVE. THE CONTRACTOR SHALL DETERMINE THE EXACT LOCATION OF ALL EXISTING UTILITIES BEFORE COMMENCING WORK, AND AGREES TO BE FULLY RESPONSIBLE FOR ANY AND ALL DAMAGES WHICH MIGHT BE OCCASIONED BY THE CONTRACTOR'S FAILURE TO EXACTLY LOCATE AND PRESERVE ANY AND ALL UNDERGROUND UTILITIES.

NORTH

Horizontal Scale

0 120' 240'

(Feet)
1 inch = 120 ft.

		By:
10-3-2025	Revised per comments from Jackson Township	MWS
10-6-2025	Revised per comments from Butler County Planning	MWS

Professional Seal

Prepared By:

Sheffler & Company, Inc.
ENGINEERING • SURVEYING

1712 Mount Nebo Road
Sewickley, PA 15143

Office Phone: 412-219-4509
Email: Info@ShefflerCo.com

Ronald & Judy Double Plan No. 2

Prepared For:

Nicole Double

Situate In:

Jackson Township, Butler County, PA

Being a Lot Line Revision Plan of Butler County
Tax Map Parcel ID No. 180-4F52-7-0000 & 180-4F52-7C

Attn: Nicole Double
148 Beahm Crest Lane
Evans City, PA 16033
Phone: (419) 908-8781

DRAWING SCALE: As Shown
DRAWN BY: AMS
DATE ISSUED: Sept. 15, 2025
REVIEWED BY: MWS
PROJECT JOB#: 5372
FIELD BOOK #: 5372
CADD#: 5372 148 BEAHM CREST LOT LINE REVISION.DWG

Sheet No.
2 of 2

J:\SHEFFLER PROJECT FILES\JOBS 5300-5399\5372 - 148 BEAHM CREST LANE, EVANS CITY\DRAWINGS\SURVEY\5372 148 BEAHM CREST LOT LINE REVISION.DWG
PLOT DATE: 10/20/2025 9:01:31 AM

OWNERS ADOPTION

KNOW ALL MEN BY THESE PRESENTS, THAT H2Q Properties OF THE TOWNSHIP OF ADAMS, COUNTY OF BUTLER, COMMONWEALTH OF PENNSYLVANIA, FOR MYSELF, MY HEIRS, EXECUTORS ADMINISTRATORS AND ASSIGNS, DO HEREBY ADOPT THIS AS THE PLAN OF MY PROPERTY, SITUATE IN THE TOWNSHIP OF ADAMS, COUNTY OF BUTLER AND COMMONWEALTH OF PENNSYLVANIA AND FOR DIVERS ADVANTAGES ACCRUING TO MYSELF, DO HEREBY DEDICATE FOREVER, FOR PUBLIC USE FOR HIGHWAY, DRAINAGE, SEWAGE AND UTILITY PURPOSES, ALL DRIVES, ROADS, STREETS, LANDS RIGHT-OF-WAY, EASEMENTS, WAYS AND OTHER PUBLIC HIGHWAYS SHOWN UPON THE PLAN, WITH THE SAME FORCE AND EFFECT AS IF THE SAME HAD BEEN OPENED THROUGH LEGAL PROCEEDINGS, AND IN CONSIDERATION OF THE APPROVAL OF SAID PLAN AND ANY FUTURE ACCEPTANCE OF SAID PUBLIC HIGHWAYS, RIGHT-OF-WAY AND EASEMENTS BY SAID COUNTY OF BUTLER AND TOWNSHIP OF ADAMS. I, H2Q Properties AND I John Quimby HEREBY AGREE TO AND BY THESE PRESENTS DO RELEASE AND FOREVER DISCHARGE SAID COMMONWEALTH OF PENNSYLVANIA, COUNTY OF BUTLER, TOWNSHIP OF ADAMS, THEIR SUCCESSORS OR ASSIGNS, FROM LIABILITY FOR DAMAGES ARISING AND TO ARISE FROM THE APPROPRIATION OF SAID GROUND FOR PUBLIC HIGHWAYS AND OTHER PUBLIC USES AND THE PHYSICAL GRADING THEREOF TO ANY GRADES THAT MAY BE ESTABLISHED. THIS DEDICATION AND RELEASE SHALL BE BINDING UPON H2Q Properties MY HEIRS, EXECUTORS, ADMINISTRATORS, AND ASSIGNS.

IN WITNESS WHEREOF, WE HEREUNTO SET OUR HANDS AND SEALS THIS 29th DAY OF September, 2025.

ATTEST:

Commonwealth of Pennsylvania - Notary Seal
Charles W. Kennedy, Notary Public
Butler County
My commission expires June 10, 2027
Commission number 1083912
Member, Pennsylvania Association of Notaries

NOTARY PUBLIC

OWNER(S) Member of H2Q Properties

THE FOREGOING ADOPTION AND DEDICATION IS BY John Quimby WITH THE FULL UNDERSTANDING AND AGREEMENT THAT THE APPROVAL OF THE BOARD OF THE SUPERVISORS OF THE TOWNSHIP OF ADAMS, IF HERETO ATTACHED, WILL BECOME NULL AND VOID UNLESS THIS PLAN IS RECORDED IN THE RECORDER OF DEEDS OFFICE OF BUTLER COUNTY, COUNTY COURT HOUSE, BUTLER, PENNSYLVANIA WITHIN NINETY (90) DAYS OF SAID APPROVAL.

INDIVIDUAL ACKNOWLEDGEMENT

COMMONWEALTH OF PENNSYLVANIA
BUTLER COUNTY

BEFORE ME, THE SUBSCRIBER, A NOTARY PUBLIC IN AND FOR SAID STATE AND COUNTY, PERSONALLY APPEARED THE ABOVE NAMED John Quimby AND ACKNOWLEDGED THAT HE IS AUTHORIZED TO EXECUTE THE ADOPTION AND DEDICATION OF THE PLAN AND WAS PRESENT AT THE MEETING AT WHICH ACTION WAS TAKEN TO ADOPT THE PLAN.

WITNESS MY HAND AND NOTARIAL SEAL THIS DAY OF September 29, 2025.

Commonwealth of Pennsylvania - Notary Seal
Charles W. Kennedy, Notary Public
Butler County
My commission expires June 10, 2027
Commission number 1083912
Member, Pennsylvania Association of Notaries

NOTARY PUBLIC

MY COMMISSION EXPIRES THE 10 DAY OF June, 2027.

CERTIFICATE OF OWNERSHIP

I, John Quimby OWNER OF TAX PARCEL 010-S2-A64-0000 DO HEREBY CERTIFY THAT THE TITLE OF THIS PROPERTY IS IN THE NAME OF H2Q Properties AS RECORDED IN INSTRUMENT NO. 202308020011238 RECORDER OF DEEDS OFFICE.

IN WITNESS WHEREOF, WE HEREUNTO SET MY/OUR HANDS AND SEALS

THIS 29th DAY OF September, 2025

Commonwealth of Pennsylvania - Notary Seal
Charles W. Kennedy, Notary Public
Butler County
My commission expires June 10, 2027
Commission number 1083912
Member, Pennsylvania Association of Notaries

NOTARY PUBLIC

OWNER(S)

DESIGN ENGINEER ACKNOWLEDGEMENT

I, Craig Jubic, A REGISTERED PROFESSIONAL ENGINEER, DO HEREBY CERTIFY TO THE BEST OF MY KNOWLEDGE THAT THE PLAN WAS DESIGNED TO MEET ALL ADAMS TOWNSHIP ORDINANCE REQUIREMENTS.

09-26-2025 PE084987

DATE REG. NO SIGNATURE

TOWNSHIP ENGINEER'S APPROVAL

I Richard V. Craft, a Registered Professional Engineer for the Township of Adams, do herby certify, to the best of my knowledge and belief, that this Land Development plan meets all of the engineering requirements set forth in the Adams Township Zoning Ordinance, Subdivision and Land Development Ordinance, and the Public and Private Improvement Code except as departures have been authorized by the approved authority.

10/24/2025 PE063068

Date Reg. No. Signature

TOWNSHIP PLANNING COMMISSION APPROVAL

THIS PLAN HAS BEEN APPROVE BY THE PLANNING COMMISSION OF THE TOWNSHIP OF ADAMS, COUNTY OF BUTLER, COMMONWEALTH OF PENNSYLVANIA, ON

THIS 3rd DAY OF September, 2025.

ATTEST:

SECRETARY CHAIRPERSON

BUTLER COUNTY PLANNING COMMISSION ACKNOWLEDGEMENT

THE BUTLER COUNTY PLANNING COMMISSION HEREBY GIVES PUBLIC NOTICE THAT IT HAS REVIEWED THIS PLAN FOR RECORDING PURPOSES ONLY AT A MEETING ON July 16, 2025. AS REQUIRED BY THE PENNSYLVANIA MUNICIPALITIES PLANNING CODE, ACT 247 OF 1968, AS AMENDED. A COPY OF THE REVIEW IS ON FILE AT THE BUTLER COUNTY OFFICE OF PLANNING AND REDEVELOPMENT. THE COMMENTS HAVE BEEN FORWARDED TO ADAMS TOWNSHIP ON July 17, 2025. THE BUTLER COUNTY PLANNING COMMISSION DOES NOT REPRESENT OR GUARANTEE THAT THIS PLAN COMPLIES WITH VARIOUS ORDINANCES, RULES, REGULATIONS OR LAWS OF THE LOCAL MUNICIPALITY, THE COMMONWEALTH OF PENNSYLVANIA, OR THE FEDERAL GOVERNMENT. THE REVIEW OF THE PLAN BY THE BUTLER COUNTY PLANNING COMMISSION DOES NOT CONSTITUTE AN ACCEPTANCE OF ANY SERVICES OR IMPROVEMENTS SHOWN ON THIS PLAN OR AN ASSUMPTION OF MAINTENANCE RESPONSIBILITIES. ADAMS TOWNSHIP HAS THE ONLY AND FINAL AUTHORITY FOR SUCH CONDITIONS.

25161 R. Henshaw MKG 11/3/25

PLAN TRACKING NUMBER ~~DIRECTOR~~ Secretary SIGNATURE DATE

chairman: J. Hines MKG

PROOF OF RECORDING

COMMONWEALTH OF PENNSYLVANIA
BUTLER COUNTY

RECORDED IN THE OFFICE FOR THE RECORDING OF DEEDS, PLATS, ETC. IN SAID COUNTY, IN PLAN BOOK VOL. 434 PAGE 14 GIVEN MY HAND AND SEAL THIS 3rd DAY OF November, 2025.

Michele M. Mustello

RECORDER OF DEEDS

MICHELE M. MUSTELLO
RECORDER OF DEEDS
My Commission Expires First Monday In January 2028

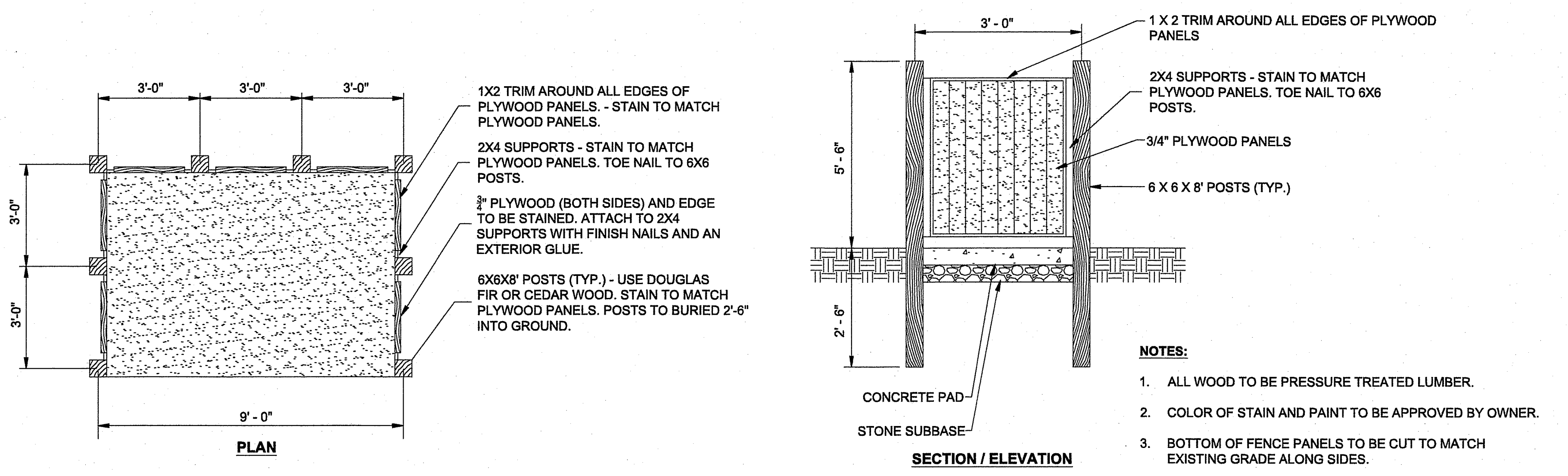
3'-0"
3'-0"
3'-0"
3'-0"
3'-0"
9' - 0"
PLAN
1X2 TRIM AROUND ALL EDGES OF PLYWOOD PANELS. - STAIN TO MATCH PLYWOOD PANELS.
2X4 SUPPORTS - STAIN TO MATCH PLYWOOD PANELS. TOE NAIL TO 6X6 POSTS.
¾" PLYWOOD (BOTH SIDES) AND EDGE TO BE STAINED. ATTACH TO 2X4 SUPPORTS WITH FINISH NAILS AND AN EXTERIOR GLUE.
6X6X8' POSTS (TYP.) - USE DOUGLAS FIR OR CEDAR WOOD. STAIN TO MATCH PLYWOOD PANELS. POSTS TO BURIED 2'-6" INTO GROUND.
3' - 0"
5' - 6"
2' - 6"
1 X 2 TRIM AROUND ALL EDGES OF PLYWOOD PANELS
2X4 SUPPORTS - STAIN TO MATCH PLYWOOD PANELS. TOE NAIL TO 6X6 POSTS.
3/4" PLYWOOD PANELS
6 X 6 X 8' POSTS (TYP.)
CONCRETE PAD
STONE SUBBASE
SECTION / ELEVATION

NOTES:

1. ALL WOOD TO BE PRESSURE TREATED LUMBER.
2. COLOR OF STAIN AND PAINT TO BE APPROVED BY OWNER.
3. BOTTOM OF FENCE PANELS TO BE CUT TO MATCH EXISTING GRADE ALONG SIDES.

1	WOODEN TRASH ENCLOSURE
C100	

Instr: 202511030018297
Pgs: 1 F: $45.00 11/3/2025 2:35 PM
Michele Mustello T20250015345
Butler County Recorder PA

TOWNSHIP BOARD OF SUPERVISORS

The Township Board of Supervisors of the Township of Adams, Butler County, Pennsylvania, hereby gives public notice that it is approving this plan of subdivision and/or land development for recording purposes only. The approval of this subdivision plat by the Township of Adams does not constitute an acceptance of the roads, streets, alleys, stormwater and sanitary sewage drainage facilities, easements or rights-of-way, water mains or any other services or improvements shown on this plan nor an assumption of maintenance responsibility, nor will the same be accepted or maintained until construction in accordance with all Township specifications and requirements and officially accepted by action of the Township Board of Supervisors.

This plat of subdivision and/or land development approved by action of the Township Board of Supervisors of the Township of Adams, Butler County, Pennsylvania on this 22nd day of September, AD 2025.

ATTEST:

(Secretary of Board of Supervisors)

(Chairman of Board of Supervisors)

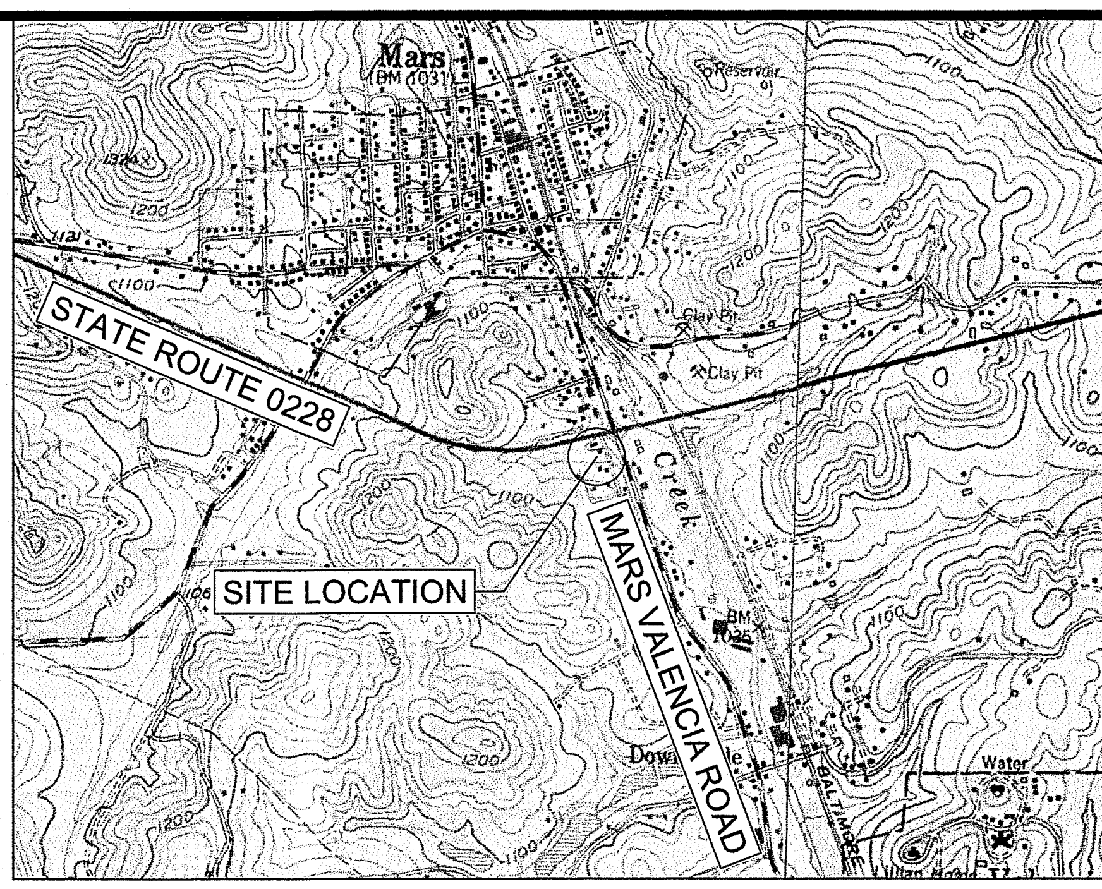
Mars
BM 1031
Reservoir
Clay Pit
Clay Pit
Creek
STATE ROUTE 0228
SITE LOCATION
MARS VALENCIA ROAD
BALTIMORE
Water
1100
1200

SITE LOCATION MAP - USGS MARS AND VALENCIA QUADS

SCALE: 1" = 2,000'

GATEWAY ENGINEERS
A FULL-SERVICE CIVIL ENGINEERING FIRM
WWW.GATEWAYENGINEERS.COM | PITTSBURGH & BUTLER PA | 855-634-9284

© Gateway Engineers Inc. All Rights Reserved

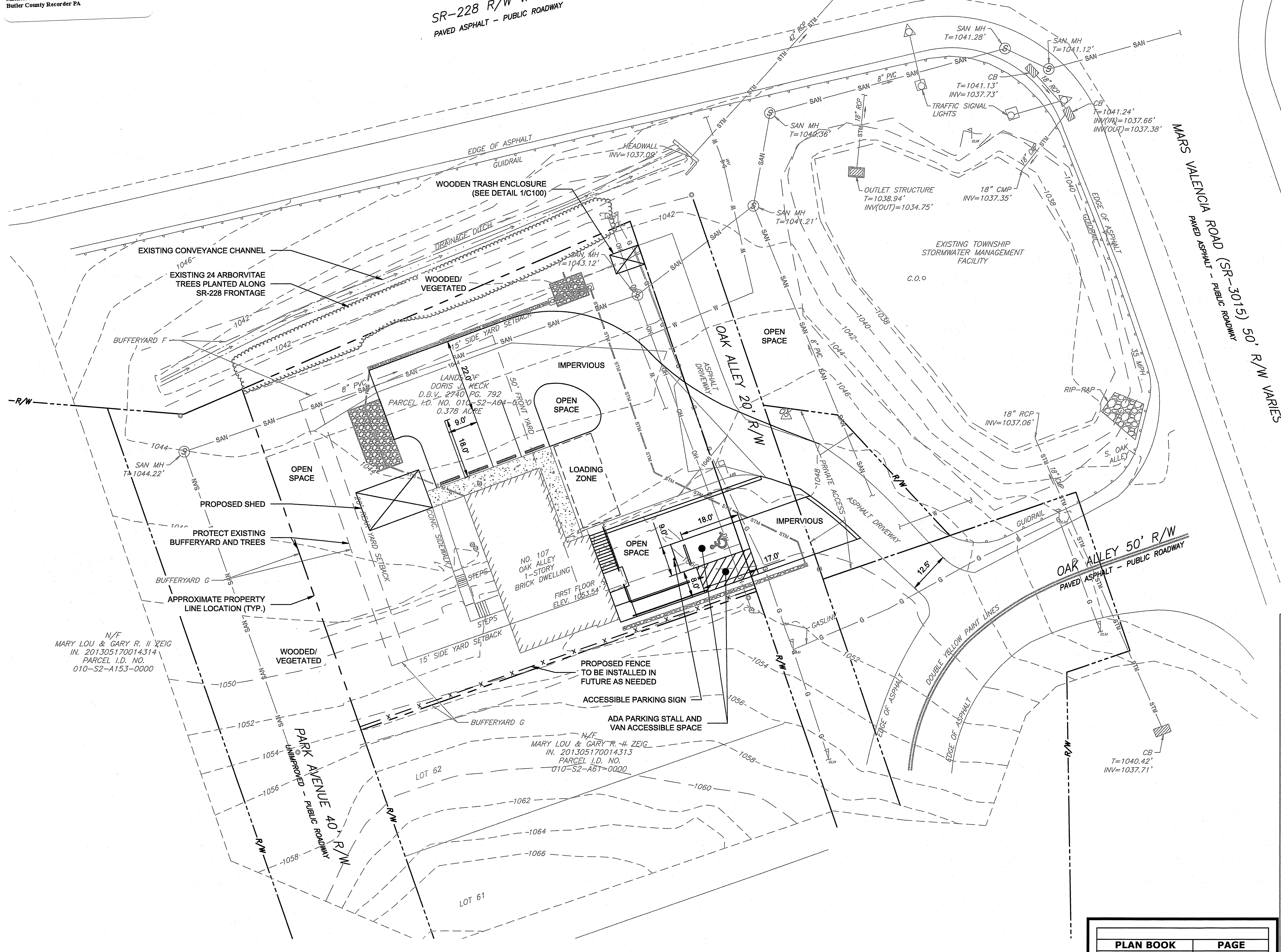
SR-228 R/W VARIES
PAVED ASPHALT - PUBLIC ROADWAY
EDGE OF ASPHALT
GUIDRAIL
HEADWALL INV=1037.09'
DRAINAGE DITCH
WOODEN TRASH ENCLOSURE (SEE DETAIL 1/C100)
EXISTING CONVEYANCE CHANNEL
EXISTING 24 ARBORVITAE TREES PLANTED ALONG SR-228 FRONTAGE
WOODED/ VEGETATED
SAN MH T=1043.12'
BUFFERYARD F
15' SIDE YARD SETBACK
8" PVC
LANDS OF DORIS J. KECK D.B.V. 2740 PG. 792 PARCEL I.D. NO. 010-S2-A64-0000 0.378 ACRE
22.0'
9.0'
18.0'
50' FRONT YARD
IMPERVIOUS
OPEN SPACE
LOADING ZONE
SAN MH T=1044.22'
OPEN SPACE
PROPOSED SHED
20' REAR YARD SETBACK
CONC. SIDEWALK
PROTECT EXISTING BUFFERYARD AND TREES
BUFFERYARD G
APPROXIMATE PROPERTY LINE LOCATION (TYP.)
STEPS
NO. 107 OAK ALLEY 1-STORY BRICK DWELLING
FIRST FLOOR ELEV. 1053.54'
OPEN SPACE
18.0'
9.0'
8.0'
17.0'
IMPERVIOUS
N/F MARY LOU & GARY R. II ZEIG IN. 201305170014314 PARCEL I.D. NO. 010-S2-A153-0000
WOODED/ VEGETATED
PROPOSED FENCE TO BE INSTALLED IN FUTURE AS NEEDED
ACCESSIBLE PARKING SIGN
ADA PARKING STALL AND VAN ACCESSIBLE SPACE
BUFFERYARD G
N/F MARY LOU & GARY R. II ZEIG IN. 201305170014313 PARCEL I.D. NO. 010-S2-A61-0000
LOT 62
LOT 61
PARK AVENUE 40' R/W UNIMPROVED - PUBLIC ROADWAY
OAK ALLEY 20' R/W
ASPHALT DRIVEWAY
PRIVATE ACCESS ASPHALT DRIVEWAY
OAK ALLEY 50' R/W PAVED ASPHALT - PUBLIC ROADWAY
12.5'
GASLINE
DOUBLE YELLOW PAINT LINES
EDGE OF ASPHALT
42" RCP STM
SAN MH T=1041.28'
SAN MH T=1041.12'
CB T=1041.13' INV=1037.73'
TRAFFIC SIGNAL LIGHTS
CB T=1041.24' INV(IN)=1037.66' INV(OUT)=1037.38'
18" RCP
SAN MH T=1040.36'
SAN MH T=1041.21'
OUTLET STRUCTURE T=1038.94' INV(OUT)=1034.75'
18" CMP INV=1037.35'
EXISTING TOWNSHIP STORMWATER MANAGEMENT FACILITY
C.O.
RIP-RAP
35 MPH
18" RCP INV=1037.06'
S. OAK ALLEY
18" CMP
CB T=1040.42' INV=1037.71'
MARS VALENCIA ROAD (SR-3015) 50' R/W VARIES
PAVED ASPHALT - PUBLIC ROADWAY
R/W
1042
1044
1046
1048
1050
1052
1054
1056
1058
1060
1062
1064
1066

AS-BUILT PLAN NOTES:

1. ALL DIMENSIONS ARE TO BUILDING FACE, FACE OF CURB OR EDGE OF SIDEWALK UNLESS NOTED OTHERWISE.
2. LABELED DIMENSIONS OVERRIDE SCALED DIMENSIONS.
3. EXISTING CONDITIONS SURVEY PROVIDED BY SHEFFLER AND COMPANY, INC.
4. EXISTING CONDITIONS INCLUDING TOPOGRAPHY DEPICTED ARE NOT SURVEY GRADE AND HAVE NOT BEEN FIELD VERIFIED. CONDITIONS SHOWN ARE ASCERTAINED FROM AERIAL PHOTOGRAPHY AND PHOTOS OF AS-BUILT SITE CONDITIONS.

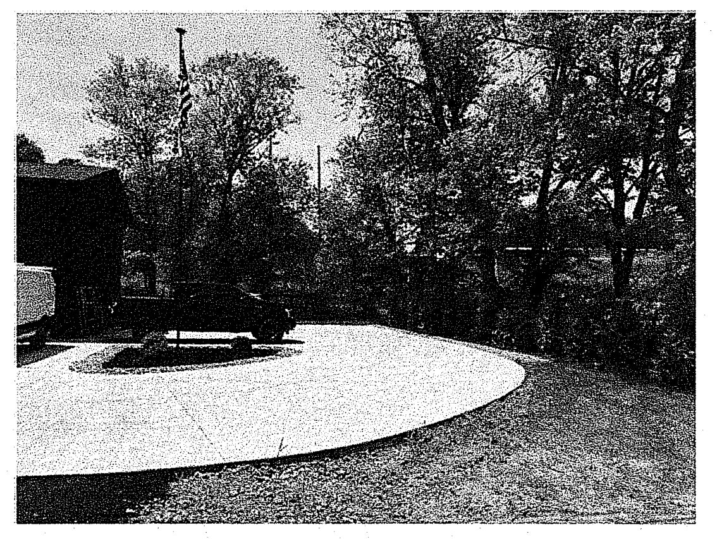

PHOTO #1 - STANDING ON EXISTING DRIVEWAY LOOKING WEST

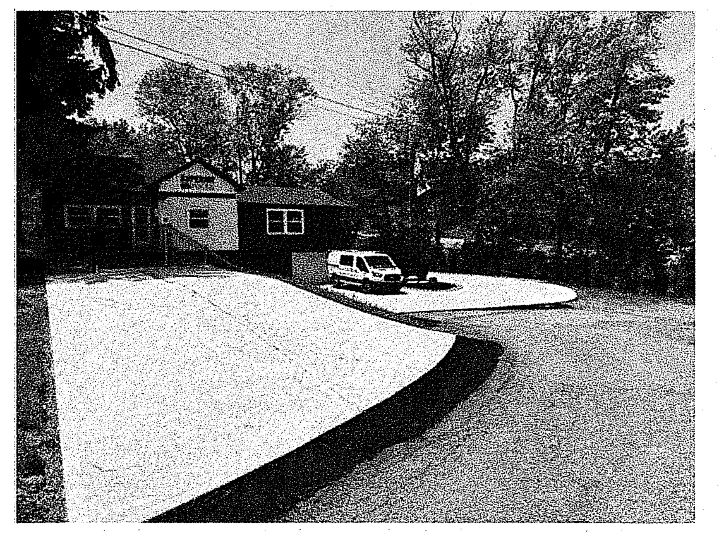

PHOTO #2 - STANDING JUST NORTH OF OAK ALLEY LOOKING NORTHWEST

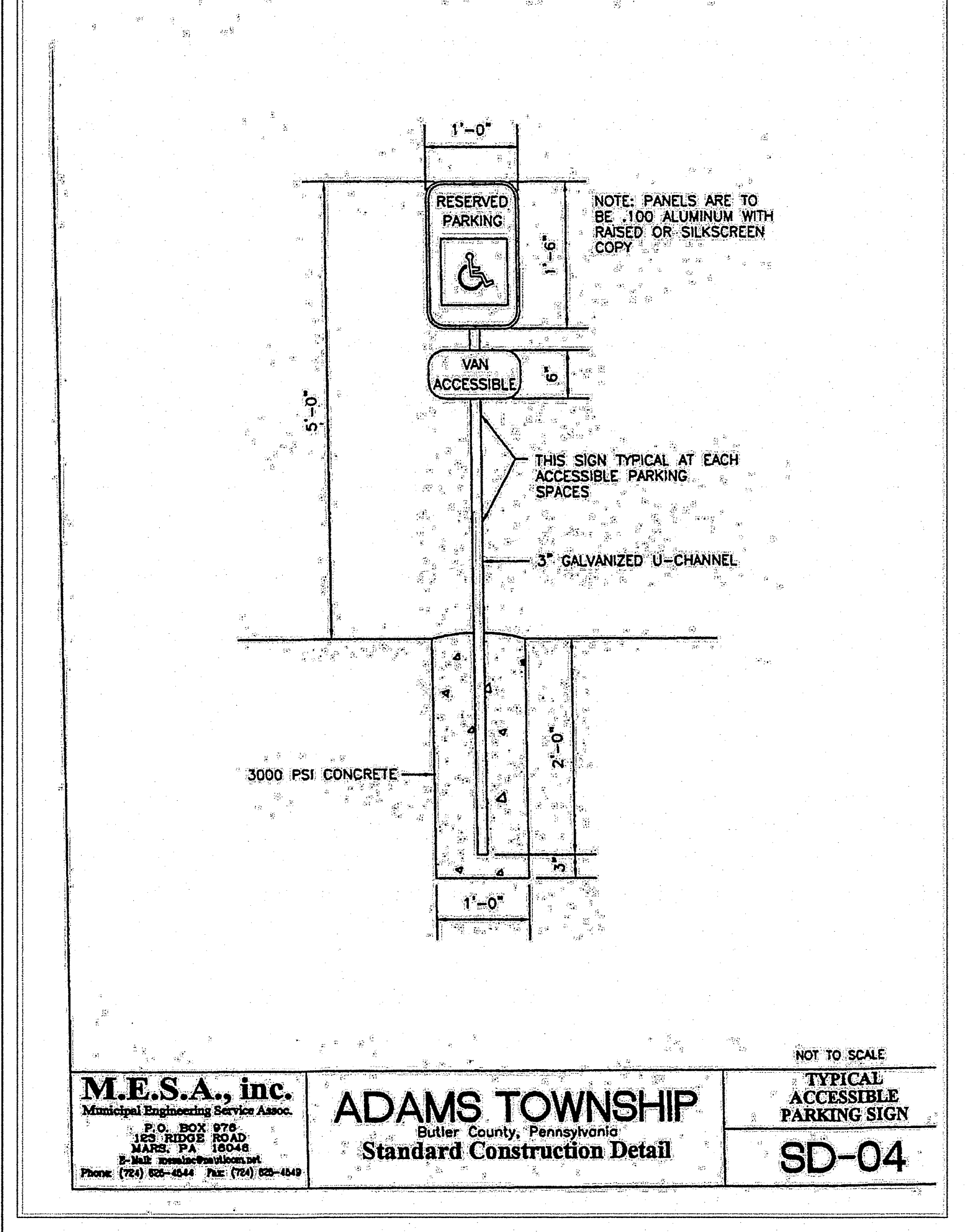
1'-0"
RESERVED PARKING
♿
1'-6"
VAN ACCESSIBLE
6"
5'-0"
NOTE: PANELS ARE TO BE .100 ALUMINUM WITH RAISED OR SILKSCREEN COPY
THIS SIGN TYPICAL AT EACH ACCESSIBLE PARKING SPACES
3" GALVANIZED U-CHANNEL
3000 PSI CONCRETE
2'-0"
3"
1'-0"

M.E.S.A., inc.
Municipal Engineering Service Assoc.
P.O. BOX 978
123 RIDGE ROAD
MARS, PA 16046
E-Mail: mesainc@zoominternet.net
Phone: (724) 625-4544 Fax: (724) 625-4549

ADAMS TOWNSHIP
Butler County, Pennsylvania
Standard Construction Detail

NOT TO SCALE
TYPICAL ACCESSIBLE PARKING SIGN
SD-04

SURVEYOR / ENGINEER
CRAIG RYAN JUBIC
ENGINEER No. PE084987

ADAMS TOWNSHIP ENGINEER

ADAMS TOWNSHIP PLANNING COMMISSION

ADAMS TOWNSHIP BOARD OF SUPERVISORS

BUTLER COUNTY PLANNING COMMISSION

BUTLER COUNTY RECORDER OF DEEDS

NORTH

PLAN BOOK	PAGE
434	14

GRAPHIC SCALE
0 10 20 40 80
(IN FEET)
1 inch = 20 ft.

NOTE: ALL SIGNATURES MUST BE MADE WITH A NAVY BLUE INK FELT TIP PEN.

REVISION RECORD

Date	No	
2025-09-15	01	ADDRESSED PLANNING COMMISSION COMMENTS
2025-09-22	02	ADDRESSED TOWNSHIP ENGINEER COMMENTS
-	03	-
-	04	-
-	05	-
-	06	-
-	07	-
-	08	-

SUPERIOR POOLS
107 OAK ALLEY
ADAMS TOWNSHIP, BUTLER COUNTY, PENNSYLVANIA

PREPARED FOR:
JOHN QUIMBY
107 OAK ALLEY
ADAMS TOWNSHIP, BUTLER COUNTY, PENNSYLVANIA

AS-BUILT
SITE PLAN

Project Number: C-47242-0000
Drawing Scale: 1" = 20'
Date Issued: --
Index Number: --
Drawn By: XC
Checked By: CRJ
Project Manager: CRJ

C100

Path & Filename=G:\Projects\47000\47242 107 Oak Alley\-0000 As-Built\Dwg\02-Sheet\C100 SITE PLAN.dwg
Plot Date=9/22/2025 6:41 AM Craig R. Jubic, P.E. Save Date=9/22/2025 6:38 AM
22.0

THE GATEWAY ENGINEERS, INC. RETAINS OWNERSHIP RIGHTS OF ALL DATA WITHIN THE PLANS. DATA CONTAINED WITHIN IS ONLY TO BE USED FOR ITS INTENDED PURPOSE BY ITS RESPONSIBLE PARTY. THE USE, REPLICATION, REPRODUCTION, OR REDISTRIBUTION OF DATA CONTAINED WITHIN IS STRICTLY PROHIBITED AND SUBJECT TO LEGAL ACTION.

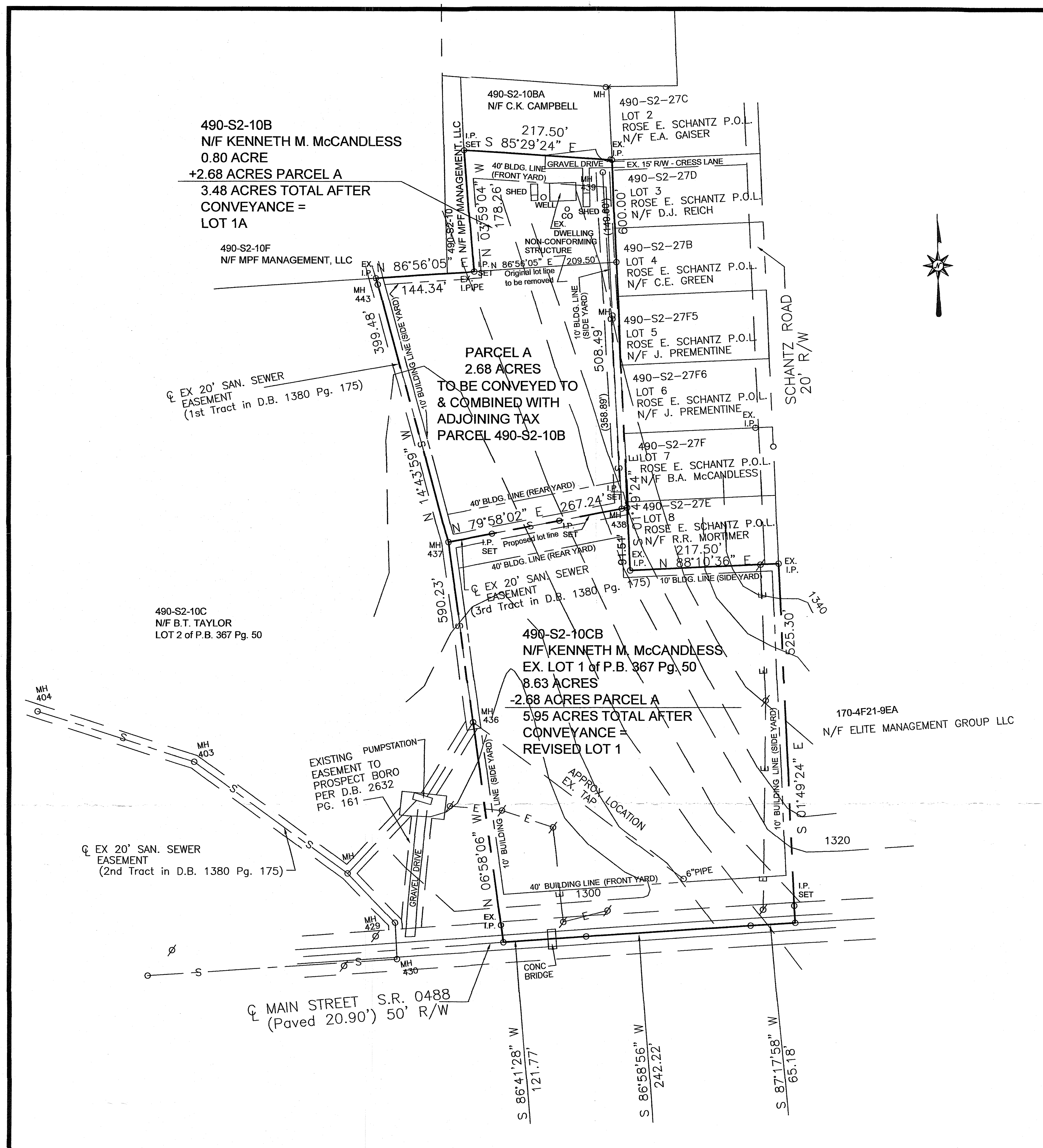
490-S2-10B
N/F KENNETH M. McCANDLESS
0.80 ACRE
+2.68 ACRES PARCEL A
3.48 ACRES TOTAL AFTER CONVEYANCE =
LOT 1A
490-S2-10BA
N/F C.K. CAMPBELL
490-S2-10
N/F MPF MANAGEMENT, LLC
490-S2-10F
N/F MPF MANAGEMENT, LLC
490–S2–27C
LOT 2
ROSE E. SCHANTZ P.O.L.
N/F E.A. GAISER
490–S2–27D
LOT 3
ROSE E. SCHANTZ P.O.L.
N/F D.J. REICH
490–S2–27B
LOT 4
ROSE E. SCHANTZ P.O.L.
N/F C.E. GREEN
490–S2–27F5
LOT 5
ROSE E. SCHANTZ P.O.L.
N/F J. PREMENTINE
490–S2–27F6
LOT 6
ROSE E. SCHANTZ P.O.L.
N/F J. PREMENTINE
490–S2–27F
LOT 7
ROSE E. SCHANTZ P.O.L.
N/F B.A. McCANDLESS
490–S2–27E
LOT 8
ROSE E. SCHANTZ P.O.L.
N/F R.R. MORTIMER
SCHANTZ ROAD 20' R/W
EX. 15' R/W - CRESS LANE
GRAVEL DRIVE
40' BLDG. LINE (FRONT YARD)
SHED
WELL
CO
SHED
EX. DWELLING NON-CONFORMING STRUCTURE
MH 439
I.P. SET
S 85°29'24" E 217.50'
EX. I.P.
N 03°59'04" W 178.26'
600.00'
(149.60')
EX. I.P.
N 86°56'05" E 144.34'
EX. I.PIPE
I.P. SET
N 86°56'05" E 209.50'
Original lot line to be removed
MH 443
399.48'
10' BUILDING LINE (SIDE YARD)
10' BLDG. LINE (SIDE YARD)
508.49'
(358.89')
MH
PARCEL A
2.68 ACRES
TO BE CONVEYED TO & COMBINED WITH ADJOINING TAX PARCEL 490-S2-10B
℄ EX 20' SAN. SEWER EASEMENT (1st Tract in D.B. 1380 Pg. 175)
EX. I.P.
N 14°43'59" W
40' BLDG. LINE (REAR YARD)
N 79°58'02" E 267.24'
I.P. SET
Proposed lot line
I.P. SET
MH 437
MH 438
S 01°49'24" E
91.54'
EX. I.P.
N 88°10'36" E 217.50'
EX. I.P.
10' BLDG. LINE (SIDE YARD)
40' BLDG. LINE (REAR YARD)
℄ EX 20' SAN. SEWER EASEMENT (3rd Tract in D.B. 1380 Pg. 175)
1340
490-S2-10C
N/F B.T. TAYLOR
LOT 2 of P.B. 367 Pg. 50
590.23'
525.30'
490-S2-10CB
N/F KENNETH M. McCANDLESS
EX. LOT 1 of P.B. 367 Pg. 50
8.63 ACRES
-2.68 ACRES PARCEL A
5.95 ACRES TOTAL AFTER CONVEYANCE =
REVISED LOT 1
170-4F21-9EA
N/F ELITE MANAGEMENT GROUP LLC
MH 404
MH 403
MH 436
EXISTING PUMPSTATION EASEMENT TO PROSPECT BORO PER D.B. 2632 PG. 161
APPROX LOCATION EX. TAP
10' BUILDING LINE (SIDE YARD)
N 06°58'06" W
10' BUILDING LINE (SIDE YARD)
S 01°49'24" E
1320
℄ EX 20' SAN. SEWER EASEMENT (2nd Tract in D.B. 1380 Pg. 175)
MH
GRAVEL DRIVE
6"PIPE
40' BUILDING LINE (FRONT YARD)
1300
I.P. SET
MH 429
EX. I.P.
MH 430
CONC BRIDGE
℄ MAIN STREET S.R. 0488 (Paved 20.90') 50' R/W
S 86°41'28" W 121.77'
S 86°58'56" W 242.22'
S 87°17'58" W 65.18'
N

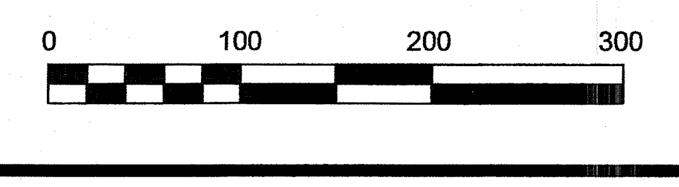
0
100
200
300

NOTES:

SUBJECT TO ANY AND ALL EXISTING RIGHTS-OF-WAY AND EASEMENTS OF RECORD.

REF: SUBDIVISION FOR THOMAS TAYLOR BY JAMES A. SPERDUTE, P.B. 206 PG. 17.

PROPERTY OWNER: KENNETH McCANDLESS
112 CRESS LANE
PROSPECT, PA 16052

REF: MARY McNAUGHTON SUBDIVISION, P.B. 192 PG. 2

CONTOURS ARE SHOWN IN APPROXIMATE LOCATION ONLY FROM THE PROSPECT, PA QUADRANGLE.

REF: PLAN OF SUBDIVISION FOR THOMAS D. & BETTY JO TAYLOR BY LAND SURVEYORS, INC., 10/19/2017, #17-122. P.B. 367 PG. 50.

ACCORDING TO THE FLOOD INSURANCE RATE MAP PREPARED FOR THE BOROUGH, THIS PROPERTY LIES IN ZONE X - AREA OF MINIMAL FLOOD HAZARD DETERMINED TO BE OUTSIDE THE 0.2% ANNUAL CHANCE FLOODPLAIN.

THE PURPOSE OF THIS PLAN IS A LOT LINE REVISION TO ADD 2.68 ACRES TO ADJOINING TAX PARCEL 490-S2-10B.

ZONING: RESIDENTIAL

40' FRONT SETBACK
10' SIDE SETBACK
40' REAR SETBACK

KNOW ALL MEN BY THESE PRESENTS, that I, Kenneth M. McCandless, of the Borough of Prospect, of the County of Butler, Commonwealth of Pennsylvania, for myself, my heirs, executors, administrators and assigns, do hereby adopt this plan as my Plan of Lots of my property, situate in Prospect Borough, Butler County, Pennsylvania, and for divers advantages accruing to me, do hereby dedicate forever, for public use for highway purposes all slope areas and all drives, roads, streets, lanes, ways and other public highways shown upon the plan, with the same force and effect as if the same had been opened through legal proceedings, and in consideration of the approval of said plan, and any future acceptance of said public highways by the said Commonwealth of Pennsylvania, County of Butler and Borough of Prospect, I hereby covenant and agree to and by these presents do release and forever discharge said Commonwealth of Pennsylvania, County of Butler and Borough of Prospect, their successors or assigns from any liability for damages arising and to arise from any appropriation of said ground for public highways and the physical grading thereof to any grades that may be established hereafter at any time. This dedications and release shall be binding upon Kenneth M. McCandless, my heirs, executors, administrators and assigns and purchasers of lots in this plan.

IN WITNESS WHEREOF, I hereunto set my hand and seal this 14

day of Nov, 2025.

ATTEST:

NOTARY PUBLIC

KENNETH M. McCANDLESS

Commonwealth of Pennsylvania - Notary Seal
ROBERT JOHN WHITE - Notary Public
Butler County
My Commission Expires September 12, 2026
Commission Number 1192974

COMMONWEALTH OF PENNSYLVANIA)SS:
COUNTY OF BUTLER

Before me, the subscriber, a Notary Public in and for said Commonwealth and County, personally appeared the above named Kenneth M. McCandless, and acknowledged the foregoing release and dedication and plan to be his act and deed and desired the same to be recorded as such.

Sworn to and subscribed before me this day.

WITNESS MY HAND AND NOTARIAL SEAL this 4 day of November,

2025.

My Commission expires the 13 day of March, 2026.

SEAL

NOTARY PUBLIC

Commonwealth of Pennsylvania - Notary Seal
Brandon Scott Grossman, Notary Public
Butler County
My commission expires March 13, 2026
Commission number 1326792
Member, Pennsylvania Association of Notaries

Cheryl A. Hughes
SU-32490-E

I, Cheryl A. Hughes, a Registered Professional Land Surveyor of the Commonwealth of Pennsylvania, do hereby certify that this plan as shown hereon is based upon actual field survey of the land described and that all angles, distances and courses are correctly shown, that the monuments and markers have been set as shown on the plan, and that this plan represents the lots, lands, streets and highways as surveyed and plotted by me for the owners or agents.

October 14, 2025 SEAL
DATE REG. NO. SU-32490-E

The Borough Council of the Borough of Prospect hereby gives public notice that in approving this plan for recording purposes only, the Borough of Prospect assumes no obligation, legal or otherwise, expressed or implied, either to accept said streets as Borough streets or roads or grade, pave and curb the streets in said plan, or to construct sewers therein or to install any other such service ordinarily installed in Borough streets or roads.

SECRETARY SEAL CHAIRMAN/ PRESIDENT

Approved by the Prospect Borough Engineer this 3rd day of November, 2025.

ENGINEER LICENSE PE-093476 DATE 11/3/2025

Approved by the Borough Council of the Borough of Prospect this 4th day of November, 20 2025.

SECRETARY SEAL CHAIRMAN/PRESIDENT

Approved by the Prospect Borough Planning Commission this 20th day of October, 2025.

Gustave G. Guenther
SECRETARY SEAL CHAIRMAN/PRESIDENT

Reviewed by the Butler County Planning Commission this 17th day of September, 2025.

R. Henshaw MKG SEAL J. Hines MKG
SECRETARY CHAIRMAN/PRESIDENT

Plan #25196

COMMONWEALTH OF PENNSYLVANIA)SS:
COUNTY OF BUTLER)

Recorded in the Recorder's Office for the recording of deeds, plans, etc. in said County in Plan Book Volume 434 page 15

Given under my hand and seal this 5th day of November, 2025.

SEAL

RECORDER

MICHELE M. MUSTELLO
RECORDER OF DEEDS

My Commission Expires First Monday in January 2028

Instr: 202511050018457
Pgs: 1 F: $45.00 11/5/2025 2:21 PM
Michele Mustello T20250015490
Butler County Recorder PA

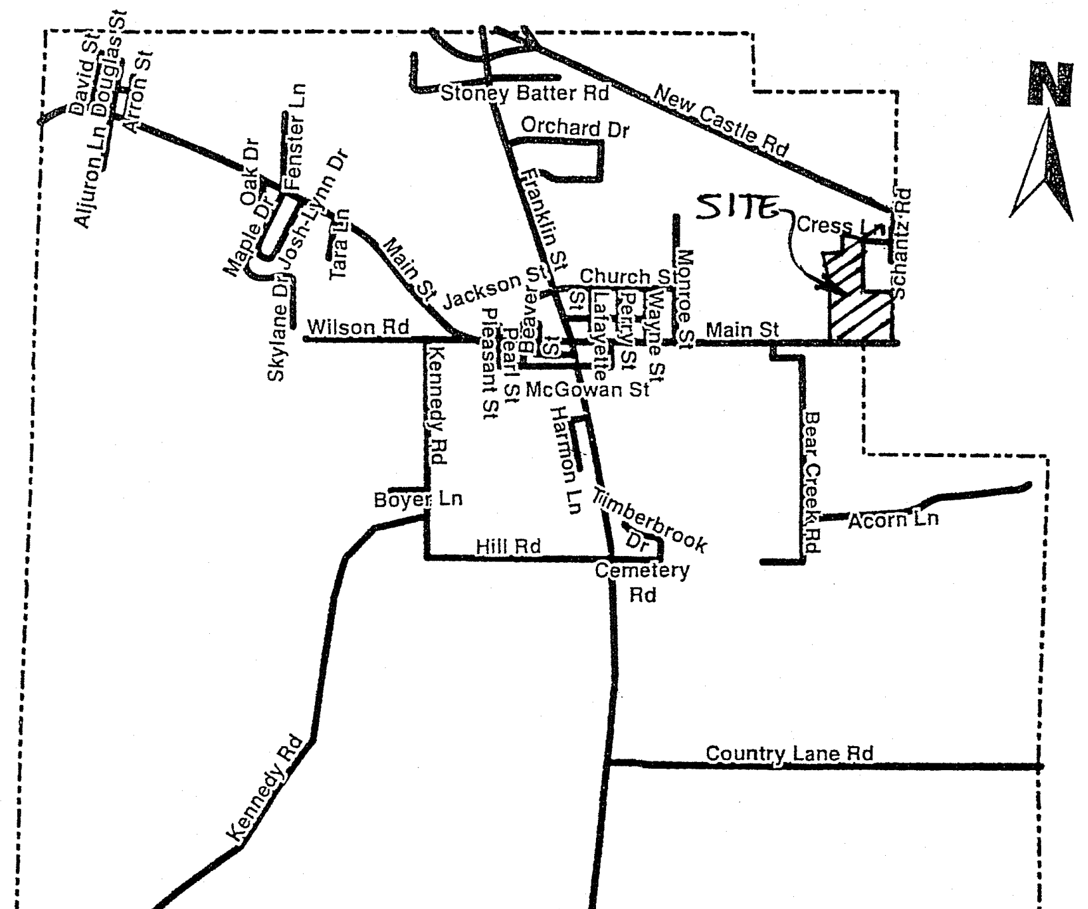
David St
Douglas St
Arron St
Aljuron Ln
Oak Dr
Fenster Ln
Josh-Lynn Dr
Maple Dr
Skylane Dr
Tara Ln
Main St
Stoney Batter Rd
Orchard Dr
New Castle Rd
Franklin St
SITE
Cress Ln
Schantz Rd
Jackson St
Church St
Monroe St
Wilson Rd
Beaver St
Pleasant St
Pearl St
Lafayette St
Perry St
Wayne St
Main St
McGowan St
Kennedy Rd
Harmon Ln
Timberbrook Dr
Bear Creek Rd
Acorn Ln
Boyer Ln
Hill Rd
Cemetery Rd
Country Lane Rd
Kennedy Rd
N

VICINITY MAP

PLAN BOOK	PAGE
434	15

TAX PARCEL #490-S2-10B & 10CB
INST. #202209190019983
INST. #201802020002220
ADDRESS: 112 CRESS LANE &
205 MAIN STREET

No.	Date	Description	By
1	10/14/25	IRON PINS SET & SETBACK LINES	BEC

McCANDLESS PLAN

LOT LINE REVISION
FOR: KENNETH M. McCANDLESS

Situate In
PROSPECT BORO., BUTLER CO., PENNSYLVANIA

Drawn By BEC	Scale: 1" = 100'	Drawing No. M1824-001-25
Checked By CAH	Date: AUGUST 26, 2025	Sheet No. 1 of 1
Approved By		Filename:

LSSE
Civil Engineers and Surveyors

523 North Main Street
Butler, Pennsylvania 16001
724–287–6865
Email: chughes@lsse.com

Fike • LSI • LSSE • Rabell • Senate

Instr: 202511050018462
Pgs: 1 F: $45.00 11/5/2025 3:15 PM
Michele Mustello T20250015492
Butler County Recorder PA

OWNER'S CERTIFICATION

WE, THOMAS H. MCCRACKEN, JR, MONAJEAN MCCRACKEN, TRUSTEES OF THE MCCRACKEN FAMILY TRUST DATED SEPTEMBER 30, 2015 AND BEVERLY S. BARTEL, THE UNDERSIGNED, HEREBY DECLARE THAT WE ARE THE OWNERS OF THE PROPERTY SHOWN ON THIS FINAL PLAN, THAT THE FINAL PLAN AND THE PROPOSED SUBDIVISION OR LAND DEVELOPMENT WERE MADE WITH THE OWNERS' CONSENT, AND THAT THE OWNERS DESIRE THE FINAL PLAN TO BE RECORDED AS SUCH.

IN WITNESS WHEREOF, WE HAVE SET OUR HAND AND SEAL THIS 4TH DAY OF November, 2025.

x Thomas H McCracken Jr
THOMAS H. MCCRACKEN, JR, TRUSTEE
MCCRACKEN FAMILY TRUST

x Monajean McCracken
MONAJEAN MCCRACKEN, TRUSTEE
MCCRACKEN FAMILY TRUST

x Beverly S. Bartel
BEVERLY S. BARTEL

ACKNOWLEDGMENT OF NOTARY PUBLIC

COMMONWEALTH OF PENNSYLVANIA }
} SS:
COUNTY OF BUTLER }

BEFORE ME, THE SUBSCRIBER, A NOTARY PUBLIC IN AND FOR SAID COUNTY AND COMMONWEALTH, PERSONALLY APPEARED THE ABOVE NAMED, THOMAS H. MCCRACKEN, JR, MONAJEAN MCCRACKEN, TRUSTEES OF THE MCCRACKEN FAMILY TRUST DATED SEPTEMBER 30, 2015 AND BEVERLY S. BARTEL, AND ACKNOWLEDGED THE FOREGOING FINAL PLAN OF SUBDIVISION OR LAND DEVELOPMENT TO BE THEIR ACT AND DEED AND DESIRED THE SAME TO BE RECORDED AS SUCH.

WITNESS MY HAND AND NOTARIAL SEAL THIS 4TH DAY OF November, 2025.

MY COMMISSION EXPIRES THE 17 DAY OF FEBRUARY, 2027

x Debra L DeLancey
NOTARY PUBLIC

Commonwealth of Pennsylvania - Notary Seal
Debra L. DeLancey, Notary Public
Butler County
My commission expires February 17, 2027
Commission number 1152784
Member, Pennsylvania Association of Notaries

SURVEYOR'S CERTIFICATION

I, STANLEY D. GRAFF, A REGISTERED SURVEYOR OF THE COMMONWEALTH OF PENNSYLVANIA, DO HEREBY CERTIFY, TO THE BEST OF MY KNOWLEDGE, THAT THIS PLAN AS SHOWN HEREON IS BASED UPON ACTUAL FIELD SURVEY OF THE LAND DESCRIBED AND THAT ALL ANGLES, DISTANCES AND COURSES ARE CORRECTLY SHOWN, THAT THE MONUMENTS AND MARKERS HAVE BEEN SET AS SHOWN ON THE PLAN, AND THAT THIS PLAN CORRECTLY REPRESENTS THE LOTS, LANDS, STREETS AND HIGHWAYS AS SURVEYED AND PLOTTED BY ME, OR UNDER MY DIRECTION, FOR THE OWNERS OR AGENTS.

SEPT 17, 2025
DATE

x
STANLEY D. GRAFF
REG. NO. SU-030161-E

MUNICIPAL DECLARATIONS

THE BOARD OF SUPERVISORS OF THE TOWNSHIP OF WINFIELD, HEREBY GIVES PUBLIC NOTICE THAT IN APPROVING THIS PLAN FOR RECORDING PURPOSES ONLY, THE TOWNSHIP OF WINFIELD ASSUMES NO OBLIGATIONS, LEGAL OR OTHERWISE, EXPRESSED OR IMPLIED EITHER TO ACCEPT SAID STREETS AS TOWNSHIP STREETS OR ROADS OR GRADE, PAVE AND CURB THE STREETS IN SAID PLAN, OR TO CONSTRUCT SEWERS THEREIN OR TO INSTALL ANY OTHER SUCH SERVICE ORDINARILY INSTALLED IN TOWNSHIP STREETS OR ROADS.

MUNICIPAL REVIEW AND APPROVAL STATEMENTS

APPROVED BY THE BOARD OF SUPERVISORS OF THE TOWNSHIP OF WINFIELD THIS 30th DAY OF OCTOBER, 2025.

x Patricia Knapp
SECRETARY

x
CHAIRPERSON
BOARD OF SUPERVISORS

REVIEWED BY THE PLANNING COMMISSION OF THE TOWNSHIP OF WINFIELD THIS 1st DAY OF October, 2025.

x Patricia Knapp
SECRETARY

x Dave Knapp
CHAIRPERSON
PLANNING COMMISSION

BUTLER COUNTY PLANNING COMMISSION REVIEW STATEMENT

REVIEWED BY THE BUTLER COUNTY PLANNING COMMISSION ON THIS 15 DAY OF OCTOBER, 2025.

x Ron Hawkins
SECRETARY

x Jesse Hinkle
CHAIRPERSON
BUTLER COUNTY PLANNING COMMISSION

#25223

PROOF OF RECORDING

RECORDED IN THE OFFICE OF THE RECORDER OF DEEDS OF THE COUNTY OF BUTLER, COMMONWEALTH OF PENNSYLVANIA, IN PLAN BOOK VOLUME 434, PAGE(S) 16.

GIVEN UNDER MY HAND AND SEAL THIS 5th DAY OF November, 2025.

x Michele M. Mustello
RECORDER OF DEEDS

MICHELE M. MUSTELLO
RECORDER OF DEEDS

My Commission Expires First Monday In January 2028

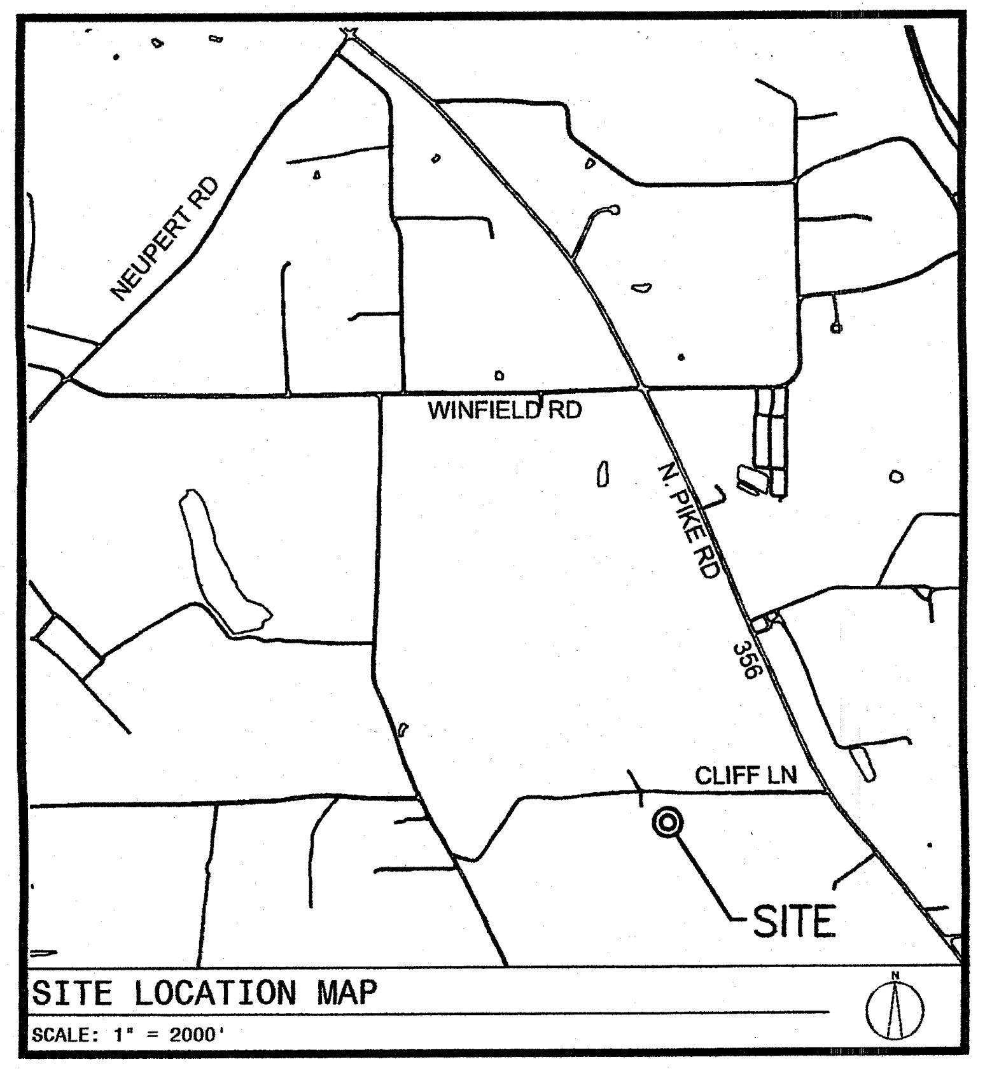

NEUPERT RD
WINFIELD RD
N PIKE RD
356
CLIFF LN
SITE

SITE LOCATION MAP
SCALE: 1" = 2000'

NOTE: SUBJECT TO AND TOGETHER WITH ANY AND ALL EXISTING RIGHTS-OF-WAY, EASEMENTS AND CONDITIONAL CLAUSES OF RECORD OR ESTABLISHED BY DUE PROCESS.

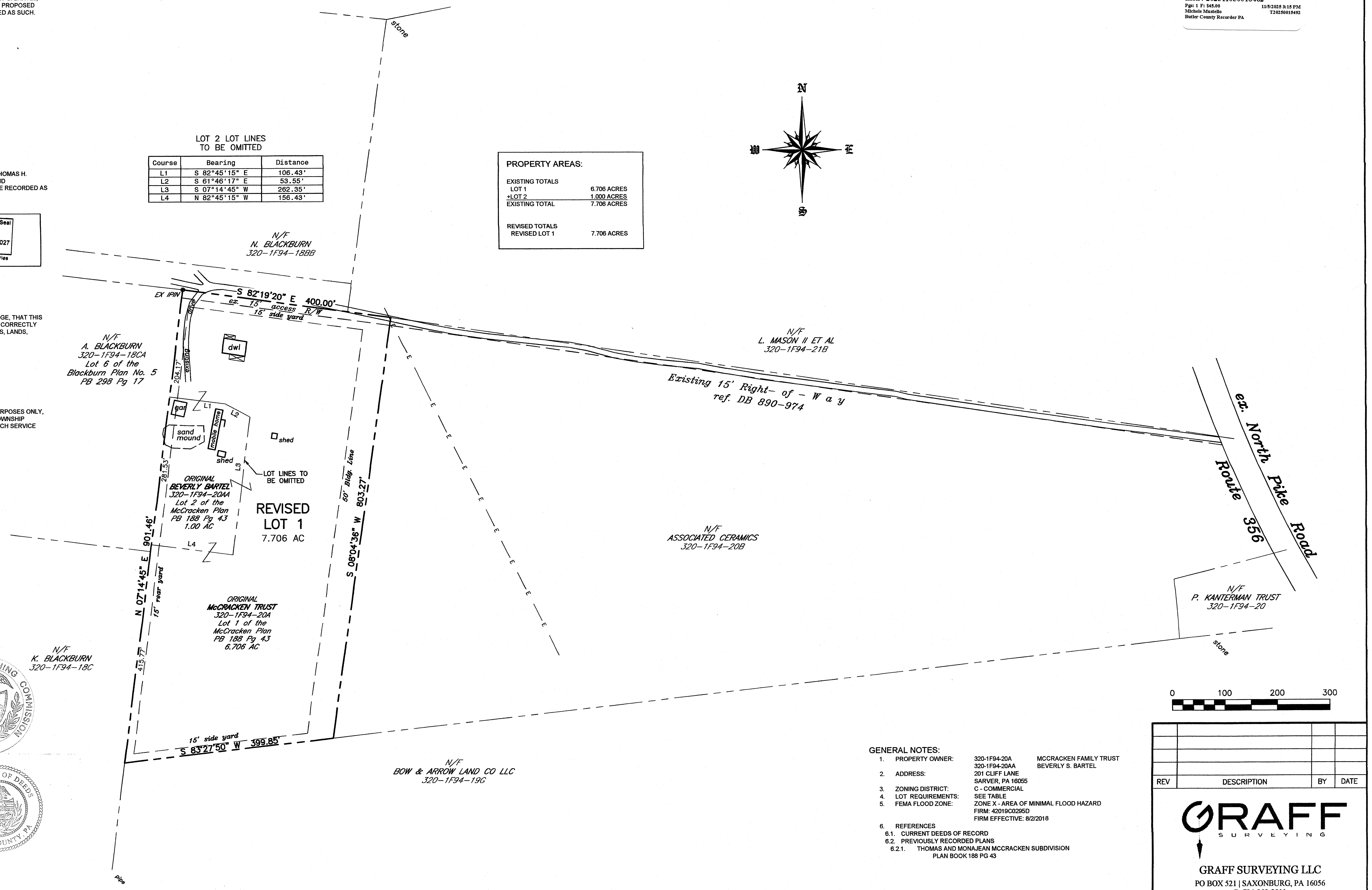

stone
N
W
E
S
N/F
N. BLACKBURN
320-1F94-18BB
EX IPIN
S 82°19'20" E 400.00'
ex. 15' access R/W
15' side yard
drive
existing
dwl
N/F
A. BLACKBURN
320-1F94-18CA
Lot 6 of the
Blackburn Plan No. 5
PB 298 Pg 17
204.17'
gar
L1
L2
sand mound
mobile home
shed
shed
L3
LOT LINES TO BE OMITTED
281.53'
ORIGINAL
BEVERLY BARTEL
320-1F94-20AA
Lot 2 of the
McCracken Plan
PB 188 Pg 43
1.00 AC
REVISED LOT 1
7.706 AC
L4
901.46'
N 07°14'45" E
15' rear yard
50' Bldg. Line
S 08°04'36" W 803.27'
ORIGINAL
McCRACKEN TRUST
320-1F94-20A
Lot 1 of the
McCracken Plan
PB 188 Pg 43
6.706 AC
415.77'
N/F
K. BLACKBURN
320-1F94-18C
15' side yard
S 83°27'50" W 399.85'
N/F
BOW & ARROW LAND CO LLC
320-1F94-19G
N/F
L. MASON II ET AL
320-1F94-21B
Existing 15' Right- of - Way
ref. DB 890-974
E
N/F
ASSOCIATED CERAMICS
320-1F94-20B
ex. North Pike Road
Route 356
N/F
P. KANTERMAN TRUST
320-1F94-20
stone
pipe
0
100
200
300

LOT 2 LOT LINES
TO BE OMITTED

Course	Bearing	Distance
L1	S 82°45'15" E	106.43'
L2	S 61°46'17" E	53.55'
L3	S 07°14'45" W	262.35'
L4	N 82°45'15" W	156.43'

PROPERTY AREAS:

EXISTING TOTALS	
LOT 1	6.706 ACRES
+LOT 2	1.000 ACRES
EXISTING TOTAL	7.706 ACRES
REVISED TOTALS	
REVISED LOT 1	7.706 ACRES

GENERAL NOTES:

1. PROPERTY OWNER: 320-1F94-20A MCCRACKEN FAMILY TRUST
   320-1F94-20AA BEVERLY S. BARTEL
2. ADDRESS: 201 CLIFF LANE
   SARVER, PA 16055
3. ZONING DISTRICT: C - COMMERCIAL
4. LOT REQUIREMENTS: SEE TABLE
5. FEMA FLOOD ZONE: ZONE X - AREA OF MINIMAL FLOOD HAZARD
   FIRM: 42019C0295D
   FIRM EFFECTIVE: 8/2/2018
6. REFERENCES
   6.1. CURRENT DEEDS OF RECORD
   6.2. PREVIOUSLY RECORDED PLANS
      6.2.1. THOMAS AND MONAJEAN MCCRACKEN SUBDIVISION
      PLAN BOOK 188 PG 43

WINFIELD TOWNSHIP
C - COMMERCIAL DISTRICT

Dimension	All Permitted Uses
Min. Lot Area	2 acres
Min. Lot Width	150 feet
Min. Front Yard Depth	50 feet
Min. Side Yard Depth	15 feet
Min. Rear Yard Depth	15 feet

McCRACKEN PLAN No. 2

Being a consolidation of Lots 1 and 2 of the McCracken Plan, Plan Book Volume 188 Page 43, and being Butler County Tax Parcels 320-1F94-20A (Lot 1) and 320-1F94-20AA (Lot 2)

STANLEY D. GRAFF
NO. 30161-E

RECORDED ________ 20___

PLAN BOOK	PAGE
434	16

SHEET 1 of 1

REV	DESCRIPTION	BY	DATE

GRAFF SURVEYING

GRAFF SURVEYING LLC
PO BOX 521 | SAXONBURG, PA 16056
P: 724-352-3811
INFO@GRAFFSURVEYING.COM
WWW.GRAFFSURVEYING.COM

PROJECT DESCRIPTION
MCCRACKEN PLAN No.2
BEING A
CONSOLIDATION
FOR
MCCRACKEN FAMILY TRUST
BEVERLY S. BARTEL

SITUATE
WINFIELD TOWNSHIP
BUTLER COUNTY, PENNSYLVANIA

DATE	DRAWN	CHECKED	SCALE
08/14/2025	SDG	Sdg	1" = 100'

PROJECT NO.	TAX PARCEL NO.	REVISION
25-153	320-1F94-20A & 20AA	-

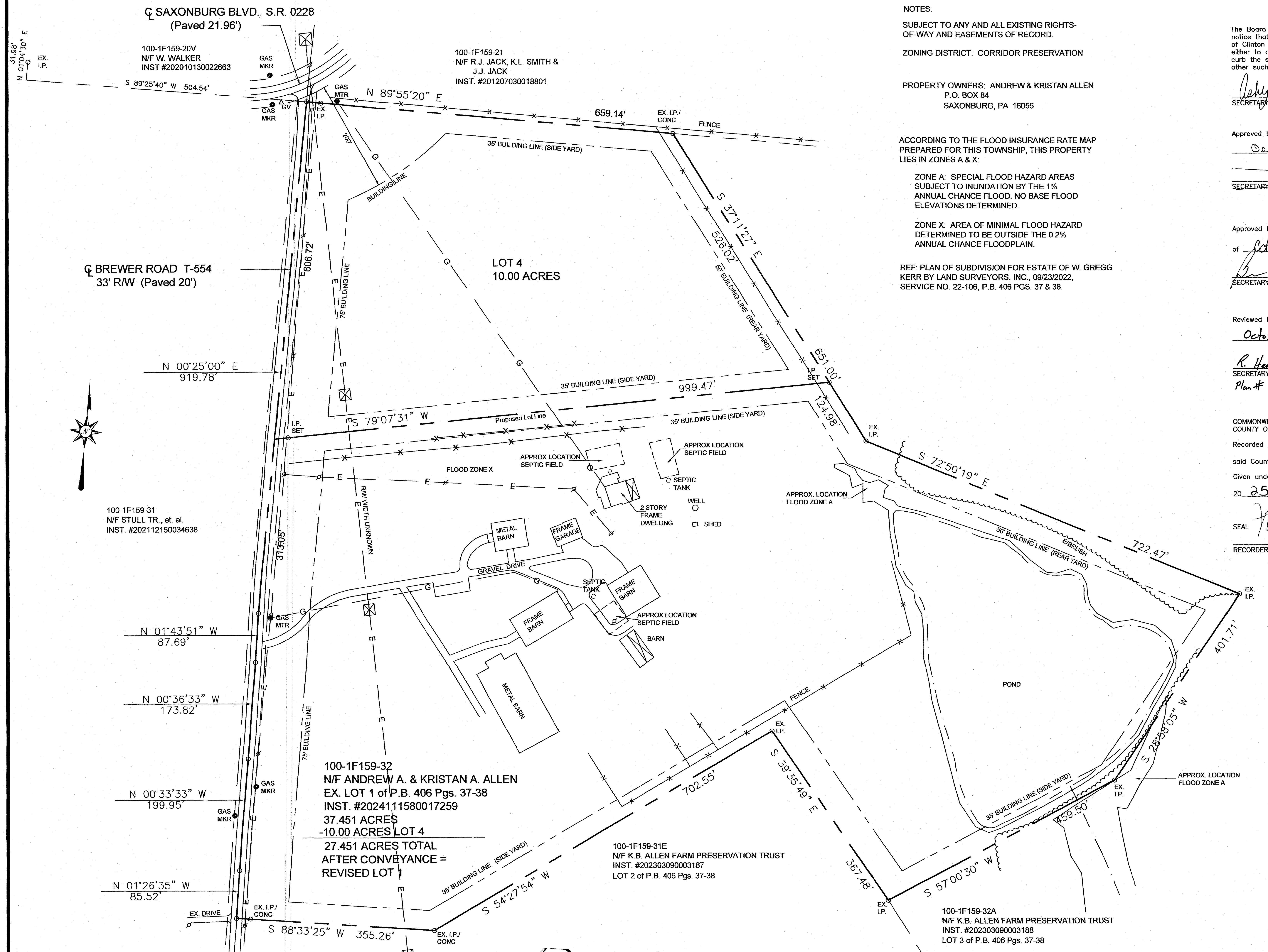
℄ SAXONBURG BLVD. S.R. 0228
(Paved 21.96')
31.98' N 01°04'30" E
EX. I.P.
100-1F159-20V
N/F W. WALKER
INST #202010130022663
S 89°25'40" W 504.54'
GAS MKR
GAS MKR
GV
GAS MTR
EX. I.P.
100-1F159-21
N/F R.J. JACK, K.L. SMITH &
J.J. JACK
INST. #201207030018801
N 89°55'20" E
659.14'
EX. I.P./ CONC
FENCE
200'
35' BUILDING LINE (SIDE YARD)
BUILDING LINE
S 37°11'27" E
526.02'
50' BUILDING LINE (REAR YARD)
LOT 4
10.00 ACRES
℄ BREWER ROAD T-554
33' R/W (Paved 20')
606.72'
75' BUILDING LINE
N 00°25'00" E
919.78'
651.00'
I.P. SET
999.47'
35' BUILDING LINE (SIDE YARD)
S 79°07'31" W
Proposed Lot Line
I.P. SET
124.98'
EX. I.P.
S 72°50'19" E
APPROX LOCATION SEPTIC FIELD
APPROX LOCATION SEPTIC FIELD
FLOOD ZONE X
SEPTIC TANK
2 STORY FRAME DWELLING
WELL
SHED
APPROX. LOCATION FLOOD ZONE A
R/W WIDTH UNKNOWN
100-1F159-31
N/F STULL TR., et. al.
INST. #202112150034638
313.05'
METAL BARN
FRAME GARAGE
GRAVEL DRIVE
SEPTIC TANK
FRAME BARN
FRAME BARN
APPROX LOCATION SEPTIC FIELD
BARN
METAL BARN
50' BUILDING LINE (REAR YARD)
E/BRUSH
722.47'
EX. I.P.
401.71'
POND
GAS MTR
N 01°43'51" W
87.69'
N 00°36'33" W
173.82'
FENCE
EX. I.P.
S 28°58'05" W
APPROX. LOCATION FLOOD ZONE A
35' BUILDING LINE (SIDE YARD)
EX. I.P.
459.50'
100-1F159-32
N/F ANDREW A. & KRISTAN A. ALLEN
EX. LOT 1 of P.B. 406 Pgs. 37-38
INST. #202411580017259
37.451 ACRES
-10.00 ACRES LOT 4
27.451 ACRES TOTAL
AFTER CONVEYANCE =
REVISED LOT 1
GAS MKR
GAS MKR
N 00°33'33" W
199.95'
702.55'
S 39°35'49" E
N 01°26'35" W
85.52'
35' BUILDING LINE (SIDE YARD)
100-1F159-31E
N/F K.B. ALLEN FARM PRESERVATION TRUST
INST. #202303090003187
LOT 2 of P.B. 406 Pgs. 37-38
367.48'
S 57°00'30" W
EX. I.P.
100-1F159-32A
N/F K.B. ALLEN FARM PRESERVATION TRUST
INST. #202303090003188
LOT 3 of P.B. 406 Pgs. 37-38
EX. DRIVE
EX. I.P./ CONC
S 88°33'25" W 355.26'
S 54°27'54" W
EX. I.P./ CONC
N
0 100 200 300

NOTES:

SUBJECT TO ANY AND ALL EXISTING RIGHTS-OF-WAY AND EASEMENTS OF RECORD.

ZONING DISTRICT: CORRIDOR PRESERVATION

PROPERTY OWNERS: ANDREW & KRISTAN ALLEN
P.O. BOX 84
SAXONBURG, PA 16056

ACCORDING TO THE FLOOD INSURANCE RATE MAP PREPARED FOR THIS TOWNSHIP, THIS PROPERTY LIES IN ZONES A & X:

ZONE A: SPECIAL FLOOD HAZARD AREAS SUBJECT TO INUNDATION BY THE 1% ANNUAL CHANCE FLOOD. NO BASE FLOOD ELEVATIONS DETERMINED.

ZONE X: AREA OF MINIMAL FLOOD HAZARD DETERMINED TO BE OUTSIDE THE 0.2% ANNUAL CHANCE FLOODPLAIN.

REF: PLAN OF SUBDIVISION FOR ESTATE OF W. GREGG KERR BY LAND SURVEYORS, INC., 09/23/2022, SERVICE NO. 22-106, P.B. 406 PGS. 37 & 38.

The Board of Supervisors of the Township of Clinton hereby gives public notice that in approving this plan for recording purposes only, the Township of Clinton assumes no obligation, legal or otherwise, expressed or implied, either to accept said streets as Township streets or roads or grade, pave and curb the streets in said plan, or to construct sewers therein or to install any other such service ordinarily installed in Township streets or roads.

Ashly Kohly SECRETARY SEAL CHAIRMAN/ PRESIDENT

Approved by the Supervisors of the Township of Clinton this 27 day of October, 20 25.

n/a per Twp.
~~SECRETARY SEAL~~ CHAIRMAN/PRESIDENT

Approved by the Clinton Township Planning Commission this 27th day of October, 20 25.

SECRETARY SEAL Marty J Milo CHAIRMAN/PRESIDENT

Reviewed by the Butler County Planning Commission this 15th day of October, 20 25.

R. Henshaw MKG SECRETARY SEAL J. Hines MKG CHAIRMAN/PRESIDENT

Plan # 25232

COMMONWEALTH OF PENNSYLVANIA)SS:
COUNTY OF BUTLER)

Recorded in the Recorder's Office for the recording of deeds, plans, etc. in said County in Plan Book Volume 434 page 17.

Given under my hand and seal this 6th day of November, 20 25

SEAL Michele M Mustello
RECORDER

MICHELE M. MUSTELLO
RECORDER OF DEEDS
My Commission Expires First Monday in January 2028

AS OF THE DATE OF THIS DEED/PLOT PLAN/DEED NOTICE RECORDING, THE PROPERTY/SUBDIVISION DESCRIBED HEREON IS AND SHALL BE DEDICATED FOR THE EXPRESS PURPOSE OF AGRICULTURAL USE. THIS WAIVER APPLIES TO LOT 4 OF THE PLAN AS SHOWN HEREON. NO PORTION OF THIS PROPERTY/SUBDIVISION HAS BEEN APPROVED BY CLINTON TOWNSHIP OR THE DEPARTMENT OF ENVIRONMENTAL PROTECTION FOR THE INSTALLATION OF SEWAGE DISPOSAL FACILITIES. NO SEWAGE PERMIT WILL BE ISSUED FOR THE INSTALLATION, CONSTRUCTION, CONNECTION TO OR USE OF ANY SEWAGE COLLECTION, CONVEYANCE, TREATMENT OR DISPOSAL SYSTEM (EXCEPT FOR REPAIRS TO EXISTING SYSTEMS) UNLESS THE MUNICIPALITY AND THE DEP HAVE BOTH APPROVED SEWAGE FACILITIES PLANNING FOR THE PROPERTY/SUBDIVISION HEREIN IN ACCORDANCE WITH THE PENNSYLVANIA SEWAGE FACILITIES ACT (35 P.S. SECTIONS 750.1 ET.SEQ.) AND REGULATIONS PROMULGATED THEREUNDER. PRIOR TO SIGNING, EXECUTING, IMPLEMENTING OR RECORDING ANY SALES CONTRACT OR SUBDIVISION PLAN, ANY PURCHASER OR SUBDIVIDER OF ANY PORTION OF LOT 4 SHOULD CONTACT APPROPRIATE OFFICIALS OF CLINTON TOWNSHIP, WHICH IS CHARGED WITH ADMINISTERING THE SEWAGE FACILITIES ACT TO DETERMINE WHAT SEWAGE FACILITIES PLANNING IS REQUIRED AND THE PROCEDURE AND REQUIREMENTS FOR OBTAINING APPROPRIATE PERMITS OR APPROVALS.

KNOW ALL MEN BY THESE PRESENTS, that we, Andrew A. and Kristan A. Allen, of the County of Butler, Commonwealth of Pennsylvania, for ourselves, our heirs, executors, administrators and assigns, do hereby adopt this as our Plan of Lots of our property, situate in Township of Clinton, County of Butler and Commonwealth of Pennsylvania, and do hereby dedicate forever, for public use for highway and utility purposes, all drives, roads, lanes, right-of-ways, ways and other public highways shown upon the plan, and we hereby release and forever discharge the Township of Clinton, its successors or assigns, from any liability, courses of action, claims or damages arising from or pertaining to in any manner said roads and and right-of-ways. This dedication and release shall be binding upon the above named property owners, their heirs, executors, administrators and assigns and purchasers of lots in this plan.

IN WITNESS WHEREOF, we hereunto set our hands and seals this 29th day of October, 20 25.

ATTEST:

Ashly Lynn Kohly NOTARY PUBLIC — ANDREW A. ALLEN, OWNER

Commonwealth of Pennsylvania - Notary Seal
Ashley Lynn Kohley, Notary Public
Butler County
My commission expires May 6, 2029
Commission number 1396742
Member, Pennsylvania Association of Notaries

KRISTAN A. ALLEN, OWNER

COMMONWEALTH OF PENNSYLVANIA)SS:
COUNTY OF BUTLER

Before me, the subscriber, a Notary Public in and for said Commonwealth and County, personally appeared the above named Andrew A. and Kristan A. Allen, and acknowledged the foregoing release and dedication and plan to be their act and deed and desired the same to be recorded as such.

Sworn to and subscribed before me this day.
WITNESS MY HAND AND NOTARIAL SEAL this 29th day of October, 20 25.

My Commission expires the 6 day of May, 20 29.

SEAL
Ashly Lynn Kohly
NOTARY PUBLIC

Commonwealth of Pennsylvania - Notary Seal
Ashley Lynn Kohley, Notary Public
Butler County
My commission expires May 6, 2029
Commission number 1396742
Member, Pennsylvania Association of Notaries

I, Cheryl A. Hughes, a Registered Professional Land Surveyor of the Commonwealth of Pennsylvania, do hereby certify that this plan as shown hereon is based upon actual field survey of the land described and that all angles, distances and courses are correctly shown, that the monuments and markers have been set as shown on the plan, and that this plan represents the lots, lands, streets and highways as surveyed and plotted by me for the owners or agents.

October 8, 2025 SEAL
DATE REG. NO. SU-32490-E

Cheryl A. Hughes
SU-32490-E

We, Andrew A. and Kristan A. Allen, owners of this plan of subdivision in our names, do hereby certify that the title of this property is in the names of Andrew A. and Kristan A. Allen, as recorded in Instrument Number 202411180017259, Recorder of Deeds Office.

Ashly Lynn Kohly WITNESS — ANDREW A. ALLEN, OWNER — KRISTAN A. ALLEN, OWNER

We, __________, mortgagee of the property embraced in this plan of subdivision in the names of Andrew A. and Kristan A. Allen, do hereby consent to the recording of said plan in the Recorder's Office and covenants appearing hereon.

N/A PER TOWNSHIP
WITNESS MORTGAGEE

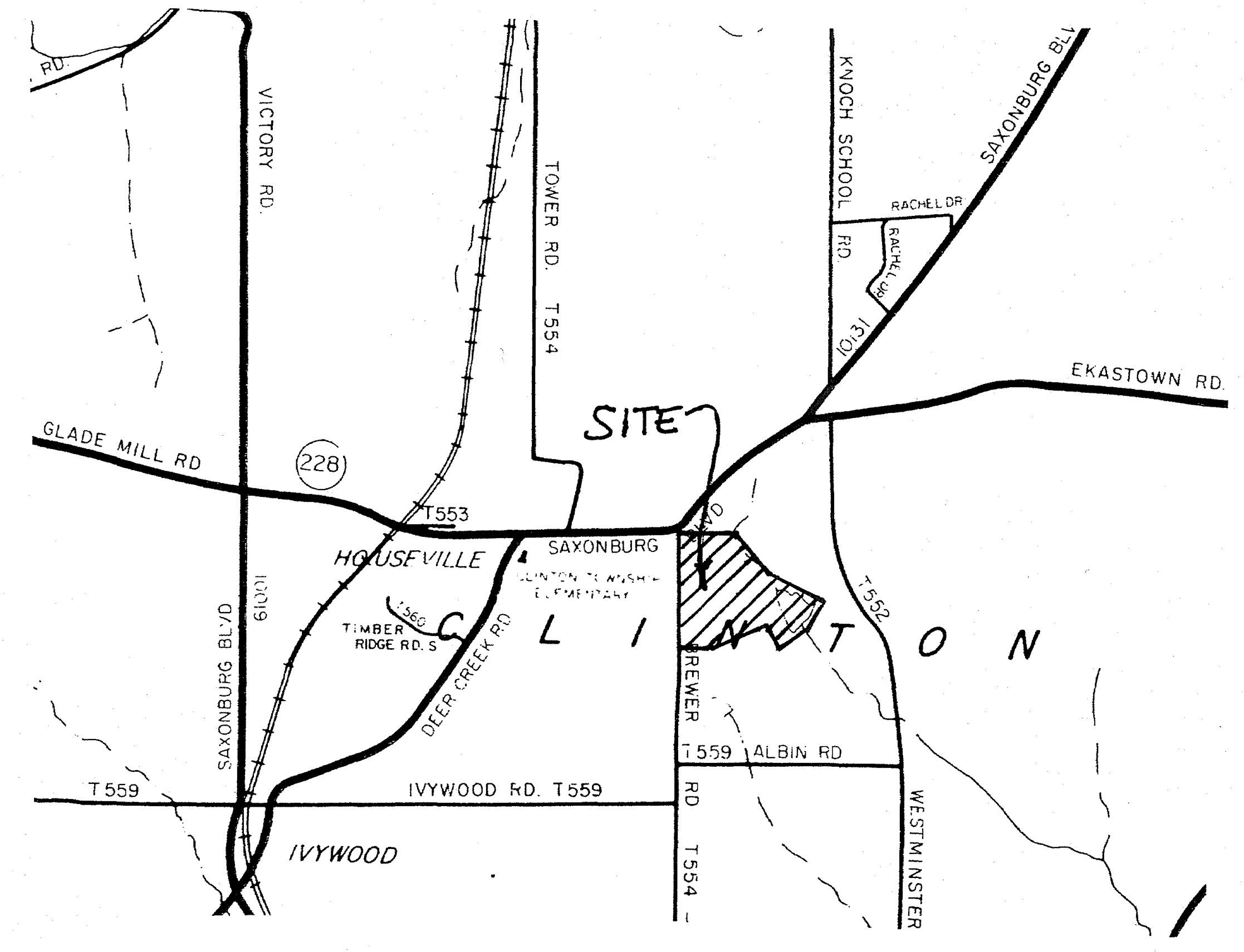
VICTORY RD
TOWER RD T554
KNOCH SCHOOL RD
SAXONBURG BLVD
RACHEL DR
EKASTOWN RD
SITE
GLADE MILL RD
228
T553
HOUSEVILLE
SAXONBURG
TIMBER RIDGE RD
DEER CREEK RD
SAXONBURG BLVD
C L I N T O N
BREWER RD
T559 ALBIN RD
T559
IVYWOOD RD. T559
IVYWOOD
T554
WESTMINSTER

VICINTY MAP Scale: 1" = 2000'

Instr: 202511060018561
Pgs: 1 F: $45.00 11/6/2025 3:31 PM
Michele Mustello T20250015569
Butler County Recorder PA

PLAN BOOK	PAGE
434	17

TAX PARCEL #100-1F159-32
INSTR. #202411180017259
ADDRESS: 121 BREWER ROAD

ALLEN PLAN

MINOR SUBDIVISION FINAL PLAN
FOR: ANDREW A. & KRISTAN A. ALLEN
Situate In
CLINTON TWP., BUTLER CO., PENNSYLVANIA

No.	Date	Description	By
1	10/8/25	ZONING DISTRICT	BEC

Drawn By: BEC
Checked By: CAH
Approved By:
Scale: 1" = 100'
Date: AUGUST 27, 2025
Drawing No.: M1798-001-25
Sheet No.: 1 of 1
Filename:

LSSE
Civil Engineers and Surveyors
523 North Main Street
Butler, Pennsylvania 16001
724-287-6865
Email: chughes@lsse.com

Fike • LSI • LSSE • Rabell • Senate

Instr: 202511060018563
Pgs: 1 F: $45.00 11/6/2025 4:01 PM
Michele Mustello T20250015571
Butler County Recorder PA

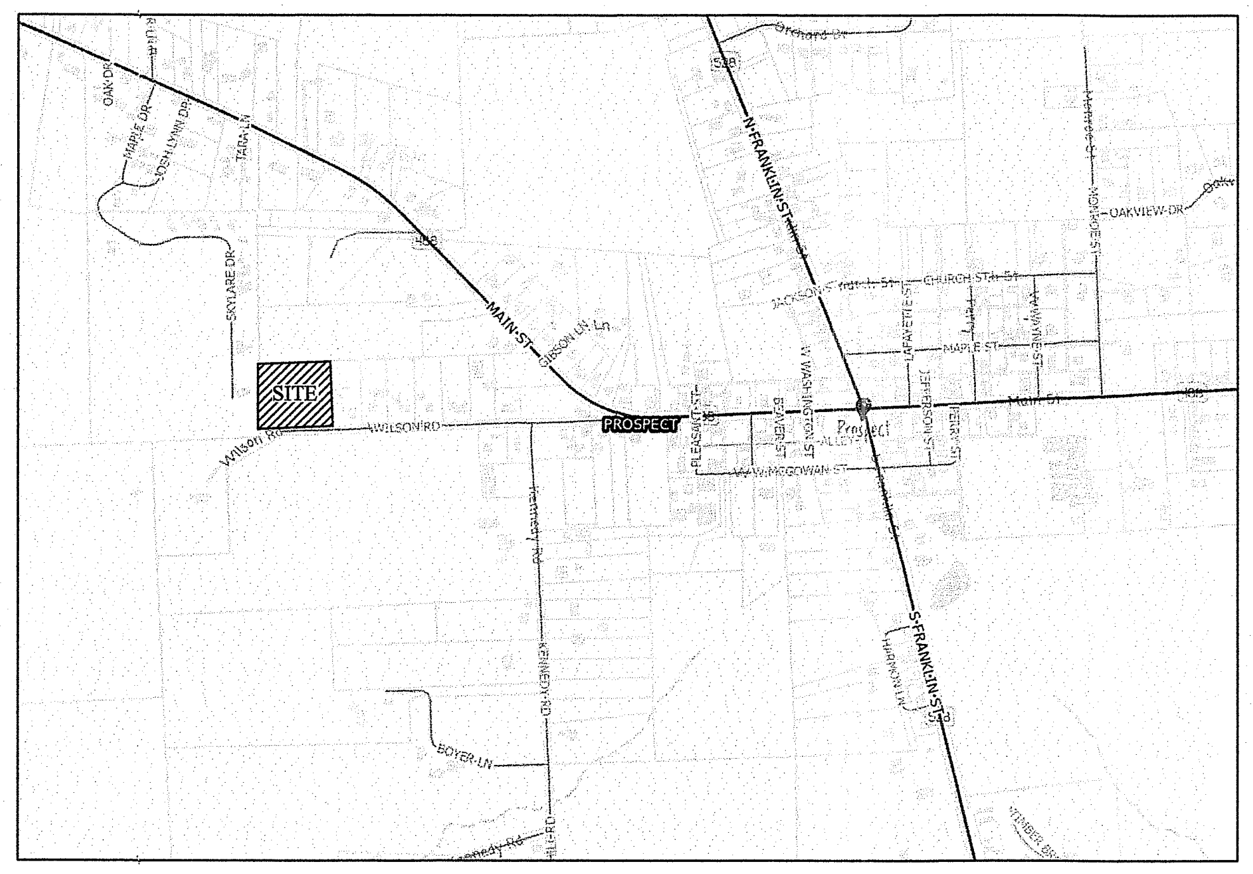

LOCATION MAP
APPROX. 1" = 1000'

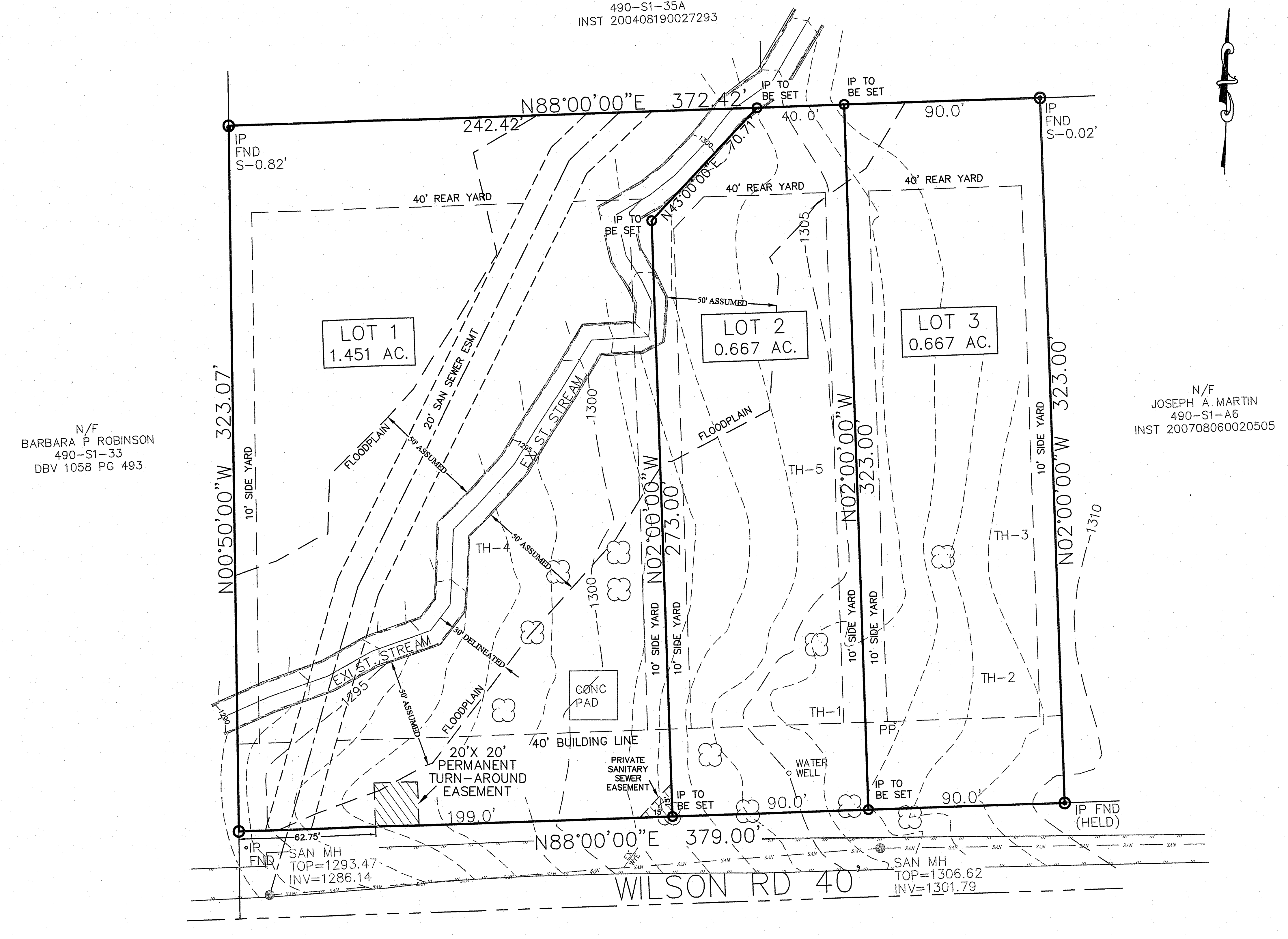

Zoning Information

Residential Zone (R)

With Public Sewer

	Required	Lot 1	Lot 2	Lot 3
Lot area	0.505 ac.	1.451 ac.	0.667 ac.	0.667 ac.
Lot Width	70' min.	199'	90'	90'
Front Yard	40'	40'	40'	40'
Side Yard	10'	10'	10'	10'
Rear Yard	40'	40'	40'	40'

Total Plan Area = 2.786 ac.

SURVEYOR (EMBOSSED)

BUTLER CO. PLANNING

COUNTY OF BUTLER

PROSPECT BOROUGH

RECORDER OF DEEDS

General Provisions

The applicable certificates stated below shall be inscribed with black waterproof India ink or veritype on the linen tracing, exactly as stated, and shall be properly signed with black waterproof India ink. The statements in parentheses are optional in most cases.

Owner's Adoption

Know all men by these Presents, That I, Edwin A Thaner, of the Borough of Prospect, County of Butler and State of Pennsylvania, for myself, my heirs, executors, administrators and assigns, do hereby adopt this Plan as my Plan of our property situated in Prospect Borough and do hereby dedicate forever for public use for highway and utility purposes, all drives, roads, lanes, way, rights-of-way, and other public highways shown upon the plan, and we release, remise and discharge Prospect Borough, its successor or assigns, of and from all liability, courses of action, claims or damages arising from or pertaining to in any manner said roads and rights-of-way.

I further agree that said plan is approved by Prospect Borough for "Planning Purposes Only" and that said Borough shall not issue any "Building Permits" for lots contained herein, nor shall any lots be deeded until either all of said roads and improvements in accordance with Prospect Borough Ordinance_____ and all other applicable ordinances have been completed and accepted by said Borough or until the Borough has approved a bond with sufficient surety to guarantee construction of the same. In Witness Whereof, I hereunto set my hand and seal this 4 day of NOV, 2025.

Notary Public

Edwin A. Thaner

Individual Acknowledgment

Commonwealth of Pennsylvania SS:

County of Butler

Before me, the subscriber, a Notary Public in and for said Commonwealth and County, personally appeared the above named Edwin A. Thaner, and acknowledge the foregoing release and dedication and plan to be his act and deed and desired the same to be recorded as such.

Sworn to and subscribed before me this 4 day of November, 2025

My Commission Expires the 13 day of March, 2026

SEAL

Commonwealth of Pennsylvania - Notary Seal
Brandon Scott Grossman, Notary Public
Butler County
My commission expires March 13, 2026
Commission number 1326792
Member, Pennsylvania Association of Notaries

Notary Public

Title Clause

I, Edwin A. Thaner, owner of the Golden Glade Plan of Lots, do hereby certify that the title of this property is in the name of Edwin A. Thaner, as recorded as instrument 202501020000002, in the Butler County Recorder of Deeds Office. I further certify that there is no mortgage, lien or encumbrance against this property.

Witness

Edwin A. Thaner

Surveyor's Certification

I, Ed Thaner, a Registered Surveyor of the Commonwealth of Pennsylvania, do hereby certify that the plan as shown hereon is based upon actual field survey of the land described and that all angles, distances and courses are correctly shown, that the monuments and markers have been set as shown on the plat, and that this plan correctly represents the lots, land, streets and highways as surveyed and plotted by me for the owners or agents.

11/6/25
Date

SEAL

Ed Thaner
Signature
Reg. No. SU-19749

Local Authority Stipulation

The Borough Council of the Borough of Prospect hereby gives public notice that in approving this plan for recording purposes only, the Borough assumes no obligations, legal or otherwise, expresses or implied either to accept said streets as Borough streets or roads or grade, pave and curb the streets in said plan, or to construct sewers therein or to install any other such service ordinarily installed in Borough streets or roads.

Francis Marcy
Secretary

President

Municipal Approvals

Approved by the Borough Council of Prospect Borough this 4th day of November, 2025.

Secretary

President

Approved by the Planning Commision of Prospect Borough this 20th day of October, 2025

Gustave G. Guentter
Secretary

Chairperson

Reviewed this 3rd day of November, 2025 and found to meet the requirements for a final plan as stated in the subdivision and land development ordinance.

Michael G. Bize
Borough Engineer

Reviewed by the Butler County Planning Commission this 20th day of August, 2025.

SEAL

R. Henshaw MKG
Secretary
Plan # 25178

J. Hines MKG
Chairperson

Proof of Recording

Commonwealth of Pennsylvania)SS:

County of Butler)

Recorded in the Recorders Office for the recording of deeds, plans, etc., in said County in Plan Book Volume 434 Page 18.

Given under my hand and seal this 6th day of November, 2025

SEAL

MICHELE M. MUSTELLO
RECORDER OF DEEDS
My Commission Expires First Monday In January 2028

Michele M. Mustello
Recorder

PLAN BOOK	PAGE
434	18

Notes:

1. The purpose of this plan is to subdivide Butler County tax parcel 490-S1-A, as recorded in the Butler County Recorder of Deeds as Instrument Number 202501020000002, into three (3) lots, as shown on this plan.
2. Any disturbance greater than 1 acre will require an NPDES permit prior to issuance of a building permit.
3. No new development is proposed as a part of this plan. A PA One-Call should be performed prior to any excavation.
4. This property is subject to all easements, covenants, restrictions, and agreements of prior record.
5. Contours shown are based on field topography.

No building permit will be issued until a small project SWM application is approved by Prospect Borough for proposed impervious areas between 2500 and 5000 sq. ft. for each lot.

OWNER INFORMATION

EDWIN THANER
460 MCKINNEY RD
WEXFORD, PA
15090

0 80 160
Feet

DATE	BY	REVISION
5-14-2025	JRM	OWNER INFORMATION, PINS TO BE SET, STREAM CONTOURS
6-12-2025	JRM	DRAINAGE EASEMENT
8-06-2025	JRM	DRAINAGE EASEMENT
10-03-2025	JRM	DRAINAGE EASEMENT REPLACED WITH FLOODPLAIN

DATE 04-08-2025	SCALE 1" = 40'
FILE NUMBER 31581	
DRAWN BY DS	CHECKED BY JM
DRAWING NO. RP-1	

ED THANER
LAND SURVEYOR
19749-E

GOLDEN GLADE PLAN OF LOTS

147 WILSON ROAD
SITUATE IN
PROSPECT BOROUGH, BUTLER CO., PA
MADE FOR
EDWIN A. THANER

GIBSON THOMAS ENGINEERING COMPANY

GIBSON - THOMAS ENGINEERING CO.
9951 OLD PERRY HIGHWAY
WEXFORD, PA 15090
PH: 724 - 935 - 8188
FAX: 724 - 935 - 8189

Instr: 202511100018668
Pgs: 1 F: $45.00 11/10/2025 10:07 AM
Michele Mustello T20250015658
Butler County Recorder PA

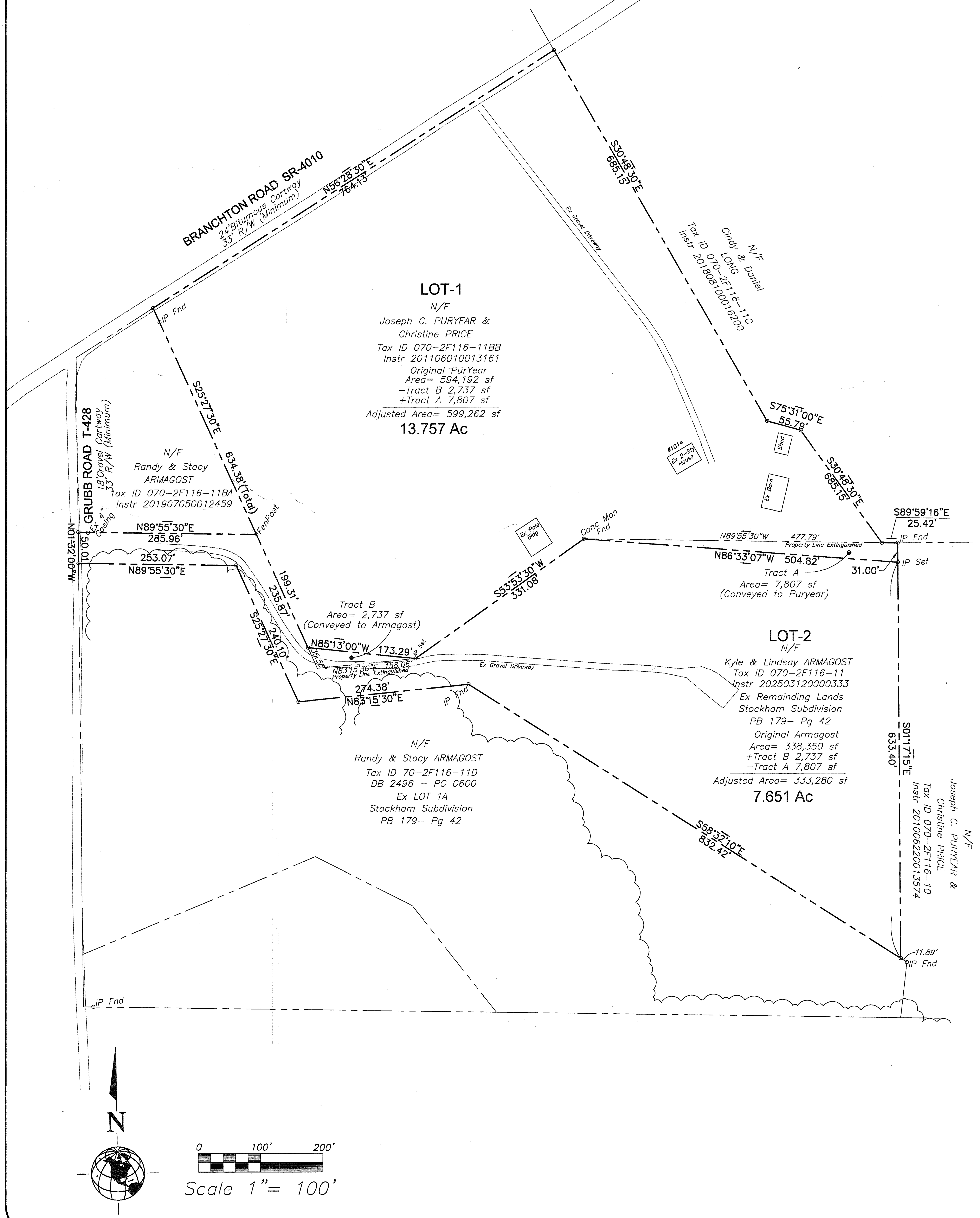
BRANCHTON ROAD SR-4010
24'Bitumous Cartway
33' R/W (Minimum)
N56°28'30"E
764.13'
IP Fnd
Ex Gravel Driveway
S30°48'30"E
685.15'
N/F
Cindy & Daniel
LONG
Tax ID 070-2F116-11C
Instr 201808100016200
LOT-1
N/F
Joseph C. PURYEAR &
Christine PRICE
Tax ID 070-2F116-11BB
Instr 201106010013161
Original PurYear
Area= 594,192 sf
-Tract B 2,737 sf
+Tract A 7,807 sf
Adjusted Area= 599,262 sf
13.757 Ac
S25°27'30"E
634.38'(Total)
GRUBB ROAD T-428
18'Gravel Cartway
33' R/W (Minimum)
N/F
Randy & Stacy
ARMAGOST
Tax ID 070-2F116-11BA
Instr 201907050012459
N01°32'00"W
50.01'
Ex 4" Casing
N89°55'30"E
285.96'
FenPost
253.07'
N89°55'30"E
199.31'
235.87'
S25°27'30"E
240.10'
Tract B
Area= 2,737 sf
(Conveyed to Armagost)
N85°13'00"W
173.29'
IP Set
36.56'
N83°15'30"E 158.06'
Property Line Extinguished
274.38'
N83°15'30"E
IP Fnd
S75°31'00"E
55.79'
#1014
Ex 2-Sty House
Shed
Ex Barn
Ex Pole Bldg
Conc Mon Fnd
S53°53'30"W
331.08'
N89°55'30"W 477.79'
Property Line Extinguished
N86°33'07"W 504.82'
S89°59'16"E
25.42'
IP Fnd
IP Set
31.00'
Tract A
Area= 7,807 sf
(Conveyed to Puryear)
Ex Gravel Driveway
LOT-2
N/F
Kyle & Lindsay ARMAGOST
Tax ID 070-2F116-11
Instr 202503120000333
Ex Remainding Lands
Stockham Subdivision
PB 179- Pg 42
Original Armagost
Area= 338,350 sf
+Tract B 2,737 sf
-Tract A 7,807 sf
Adjusted Area= 333,280 sf
7.651 Ac
N/F
Randy & Stacy ARMAGOST
Tax ID 70-2F116-11D
DB 2496 - PG 0600
Ex LOT 1A
Stockham Subdivision
PB 179- Pg 42
S58°32'10"E
832.42'
S01°17'15"E
633.40'
N/F
Joseph C. PURYEAR &
Christine PRICE
Tax ID 070-2F116-10
Instr 201006220013574
11.89'
IP Fnd
IP Fnd
N
0
100'
200'
Scale 1"= 100'

OWNERS ADOPTION

WE, *JOSEPH C. PURYEAR & CHRISTINE PRICE* , THE UNDERSIGNED, HEREBY DECLARE THAT *JOSEPH C. PURYEAR & CHRISTINE PRICE* ARE THE OWNERS OF THE PROPERTIES SHOWN ON THIS FINAL PLAN, THAT THE PROPOSED LOT LINE REVISIONS WERE MADE WITH THE OWNERS CONSENT, AND THAT THE OWNERS DESIRE THE FINAL PLAN TO BE RECORDED AS SUCH.

IN WITNESS WHEREOF, WE HEREUNTO SET OUR HAND AND SEAL THIS 30 DAY OF October, 2025.

NOTARY PUBLIC ______

OWNER Joseph C Puryear

OWNER Christine Price AKA Christine Puryear

ACKNOWLEDGMENT

COMMONWEALTH OF PENNSYLVANIA) SS:
COUNTY OF BUTLER

BEFORE ME, THE SUBSCRIBER, A NOTARY PUBLIC IN AND FOR SAID COMMONWEALTH AND COUNTY, PERSONALLY APPEARED THE ABOVE NAMED *JOSEPH C. PURYEAR & CHRISTINE PRICE* aka Christine Puryear WHO ACKNOWLEDGED THE FOREGOING FINAL PLAN OF LOT LINE REVISION TO BE THEIR ACT AND DEED AND DESIRED THE SAME TO BE RECORDED AS SUCH.

SWORN TO AND SUBSCRIBED BEFORE ME THIS 30 DAY OF october, 2025.

MY COMMISSION EXPIRES THE 06 DAY OF MARCH, 2028.

Commonwealth of Pennsylvania - Notary Seal
Darrin J. Nichter, Notary Public
Butler County
My commission expires March 6, 2028
Commission number 1120575
Member, Pennsylvania Association of Notaries

NOTARY PUBLIC SIGNATURE ______

OWNERS ADOPTION

I, *KYLE ARMAGOST & LINDSAY ARMAGOST* , THE UNDERSIGNED, HEREBY DECLARE THAT *KYLE ARMAGOST & LINDSAY ARMAGOST* ARE THE OWNERS OF THE PROPERTIES SHOWN ON THIS FINAL PLAN, THAT THE PROPOSED LOT LINE REVISIONS WERE MADE WITH THE OWNERS CONSENT, AND THAT THE OWNER DESIRES THE FINAL PLAN TO BE RECORDED AS SUCH.

IN WITNESS WHEREOF, WE HEREUNTO SET OUR HAND AND SEAL THIS 16 DAY OF October, 2025.

NOTARY PUBLIC ______

OWNER Lindsay Armagost

ACKNOWLEDGMENT

COMMONWEALTH OF PENNSYLVANIA) SS:
COUNTY OF BUTLER

BEFORE ME, THE SUBSCRIBER, A NOTARY PUBLIC IN AND FOR SAID COMMONWEALTH AND COUNTY, PERSONALLY APPEARED THE ABOVE NAMED *KYLE ARMAGOST & LINDSAY ARMAGOST,* WHO ACKNOWLEDGED THE FOREGOING FINAL PLAN OF LOT LINE REVISION TO BE THEIR ACT AND DEED AND DESIRED THE SAME TO BE RECORDED AS SUCH.

SWORN TO AND SUBSCRIBED BEFORE ME THIS 16 DAY OF october, 2025.

MY COMMISSION EXPIRES THE 06 DAY OF MARCH, 2028.

Commonwealth of Pennsylvania - Notary Seal
Darrin J. Nichter, Notary Public
Butler County
My commission expires March 6, 2028
Commission number 1120575
Member, Pennsylvania Association of Notaries

NOTARY PUBLIC SIGNATURE ______

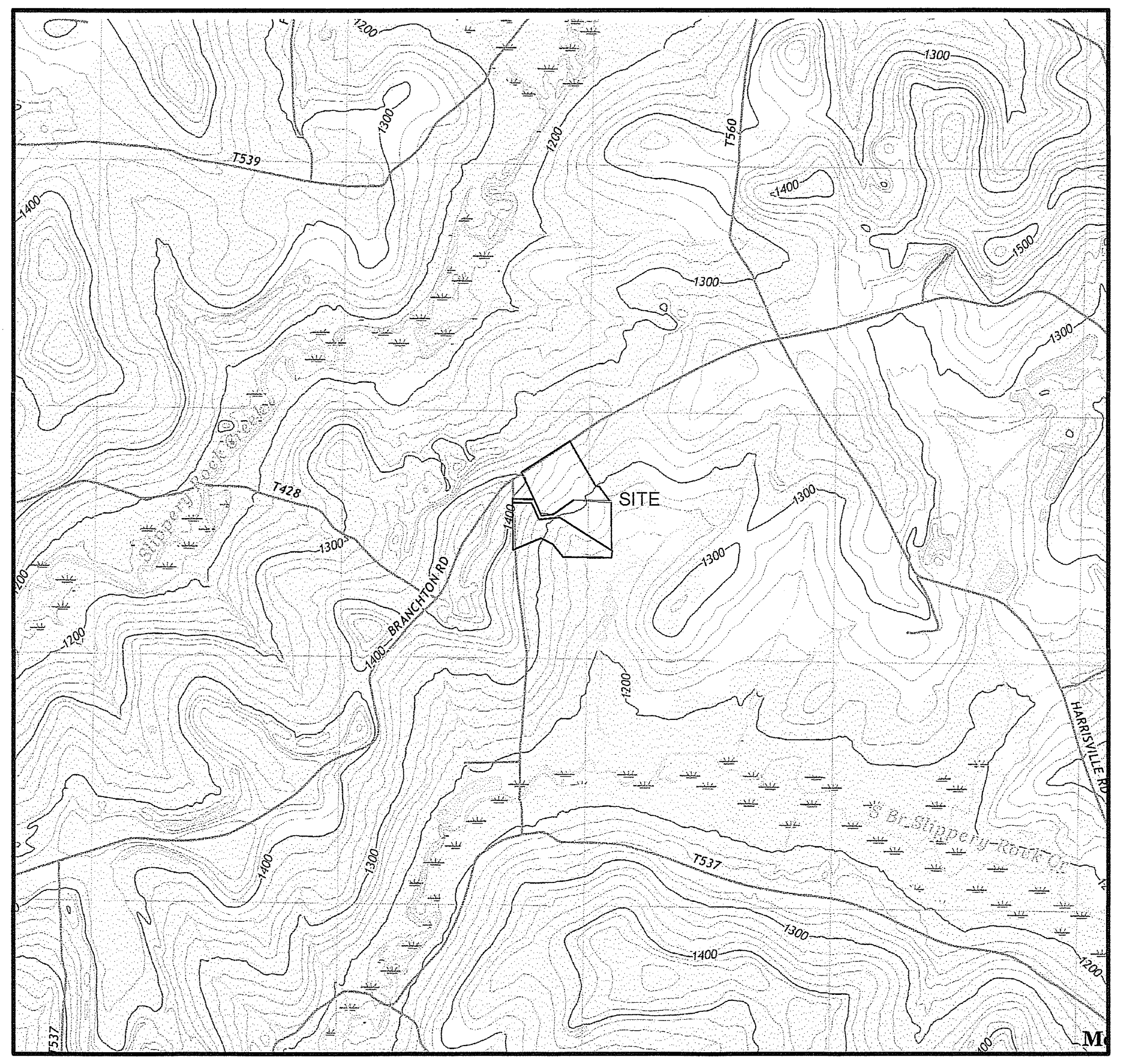
SITE
T428
T537
1300
1200

USGS LOCATION MAP
Scale: 1"=2000'
West Sunbury, PA USGS Quad 2019

MUNICIPAL REVIEW

THE BOARD OF SUPERVISORS OF THE TOWNSHIP OF CHERRY HEREBY GIVES PUBLIC NOTICE THAT IN APPROVING THIS PLAN FOR RECORDING PURPOSES ONLY, THE TOWNSHIP ASSUMES NO OBLIGATIONS, LEGAL OR OTHERWISE, EXPRESSES OR IMPLIED EITHER TO ACCEPT SAID STREETS AS TOWNSHIP STREETS OR ROADS OR GRADE, PAVE AND CURB THE STREETS IN SAID PLAN, OR TO CONSTRUCT SEWERS THEREIN OR TO INSTALL ANY OTHER SUCH SERVICE ORDINARILY INSTALLED IN TOWNSHIP STREETS OR ROADS.

REVIEWED AND APPROVED THIS 7th DAY OF OCTOBER, 2025.

SECRETARY Carolyn R. Yeager PRESIDENT ______

COUNTY PLANNING COMMISSION APPROVAL

APPROVED BY THE BUTLER COUNTY PLANNING COMMISSION THIS 17 DAY OF SEPTEMBER, 2025.

SECRETARY Ron Henshaw CHAIRMAN ______

SEAL

SEE COMMENTS ON FILE AT THE BUTLER COUNTY PLANNING COMMISSION

PLAN NUMBER: 25203

PROOF OF RECORDING

COMMONWEALTH OF PENNSYLVANIA)SS:
COUNTY OF BUTLER

RECORDED IN THE RECORDERS OFFICE FOR THE RECORDING OF DEEDS, PLANS, ETC., IN SAID COUNTY, IN PLAN BOOK VOLUME 434, PAGE 19.

GIVEN UNDER MY HAND AND SEAL THIS 10th DAY OF November 2025.

SEAL RECORDER Michele M. Mustello

MICHELE M. MUSTELLO
RECORDER OF DEEDS
My Commission Expires First Monday in January 2028

SURVEYORS CERTIFICATION

I, *JAMES A. DAY*, A REGISTERED SURVEYOR OF THE COMMONWEALTH OF PENNSYLVANIA, DO HEREBY CERTIFY THAT THIS PLAN SHOWN HEREON IS TRUE AND CORRECT TO THE STANDARDS OF THE BUTLER COUNTY SUBDIVISION AND LAND DEVELOPMENT ORDINANCE AND THAT THE SURVEY AND ALL ANGLES, DISTANCES AND COURSES ARE ACCURATELY SHOWN, THAT THE MONUMENTS AND MARKERS AS SHOWN ON THE PLAT HAVE BEEN, OR WILL BE SET, AND TO THE BEST OF MY KNOWLEDGE, THAT THIS PLAN CORRECTLY REPRESENTS THE LOTS, LANDS STREETS AND HIGHWAYS AS SURVEYED AND PLOTTED BY ME FOR THE OWNERS OR AGENTS.

08-29-2025
DATE

James A. Day
REGISTRATION NUMBER # PA-SU039394E

PLAN NOTES:

1. THIS PLAN PROPOSES TWO LOT LINE REVISIONS BETWEEN TWO ADJACENT TRACTS. NO NEW BUILDING LOT IS CREATED.
2. THE PROPERTIES SHOWN HEREON ARE SUBJECT TO ALL EXCEPTIONS, RESERVATIONS, COVENANTS, CONDITIONS, RESTRICTIONS & CONVEYANCES WHICH APPEAR IN THE INSTRUMENTS, WHICH FORM THE RECORD CHAIN OF TITLE OR WHICH ARE VISIBLE ON THE PREMISES.
3. THESE PROPERTIES ARE NOT IN A FEMA DEFINED FLOODPLAIN.
4. ALL IP SET ARE #5 REBAR, 30" LENGTH, WITH PLASTIC CAP.

PROJECT LOCATION ADDRESS:
117 GRUBB ROAD
BOYERS, PA 16020

SUBDIVISION OWNERS CONTACT:
KYLE & LINDSAY ARMAGOST
117 GRUBB ROAD
BOYERS, PA 16020

JOSEPH PURYEAR & CHRISTINE PRICE
254 HARRISVILLE RD
WEST SUNBURY, PA 16061

RECORDED	
PLAN BOOK	PAGE
434	19

JAMES A. DAY
SU-039394-E

Situated at:
GRUBB ROAD
CHERRY TOWNSHIP, BUTLER COUNTY, PA

ARMAGOST / PURYEAR LOT LINE REVISION
MINOR SUBDIVISION FINAL PLAN

JAMES A. DAY , P.E., P.L.S.
CONSULTING ENGINEERING
AND SURVEYING SERVICES
304 Beech Road
Butler, PA 16001
Ph/Fax: 724-283-3267
email: jadmday@msn.com

DRAWING DATE: 08-29-2025
SHEET 1 / 1

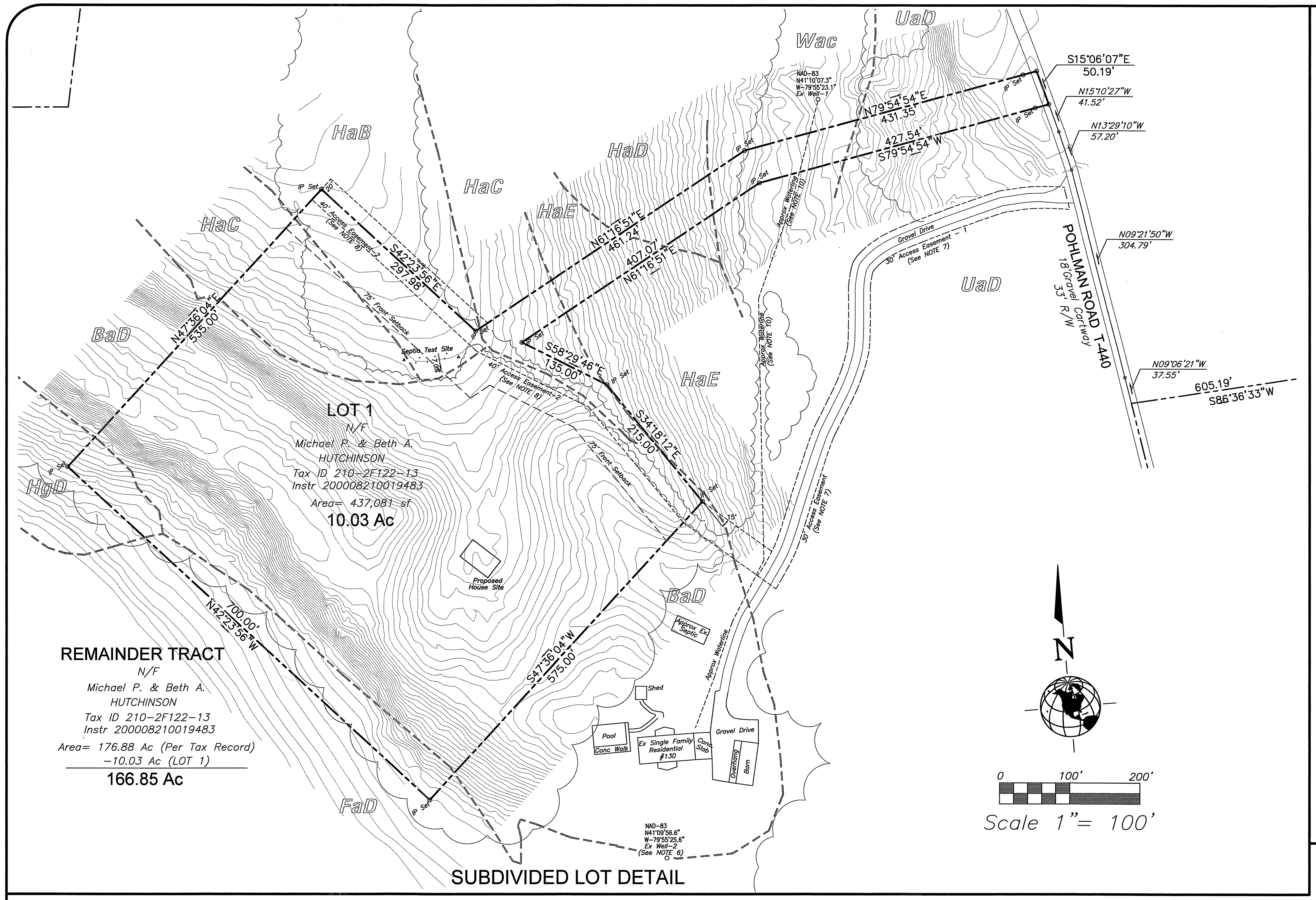

Wac
UaD
HaB
HaC
HaD
HaE
BaD
HgD
FaD
NAD-83
N41°10'07.3"
W-79°55'23.1"
Ex Well-1
S15°06'07"E
50.19'
N15°10'27"W
41.52'
N13°29'10"W
57.20'
N79°54'54"E
431.35'
427.54'
S79°54'54"W
IP Set
N61°16'51"E
461.24'
407.07'
N61°16'51"E
S42°23'56"E
297.98'
40' Access Easement-2 (See NOTE 8)
75' Front Setback
Septic Test Site
N47°36'04"E
535.00'
S58°29'46"E
135.00'
S34°18'12"E
215.00'
Approx Waterline (See NOTE 10)
Gravel Drive
30' Access Easement - 1 (See NOTE 7)
30' Access Easement (See NOTE 7)
POHLMAN ROAD T-440
18' Gravel Cartway
33' R/W
N09°21'50"W
304.79'
N09°06'21"W
37.55'
605.19'
S86°36'33"W
LOT 1
N/F
Michael P. & Beth A.
HUTCHINSON
Tax ID 210-2F122-13
Instr 200008210019483
Area= 437,081 sf
10.03 Ac
Proposed House Site
700.00'
N42°23'56"W
S47°36'04"W
575.00'
Approx Ex. Septic
Approx Waterline
Shed
Pool
Conc Walk
Ex Single Family Residential #130
Conc Slab
Gravel Drive
Overhang
Barn
REMAINDER TRACT
N/F
Michael P. & Beth A.
HUTCHINSON
Tax ID 210-2F122-13
Instr 200008210019483
Area= 176.88 Ac (Per Tax Record)
-10.03 Ac (LOT 1)
166.85 Ac
NAD-83
N41°09'56.6"
W-79°55'25.6"
Ex Well-2
(See NOTE 6)
N
0
100'
200'
Scale 1"= 100'

SUBDIVIDED LOT DETAIL

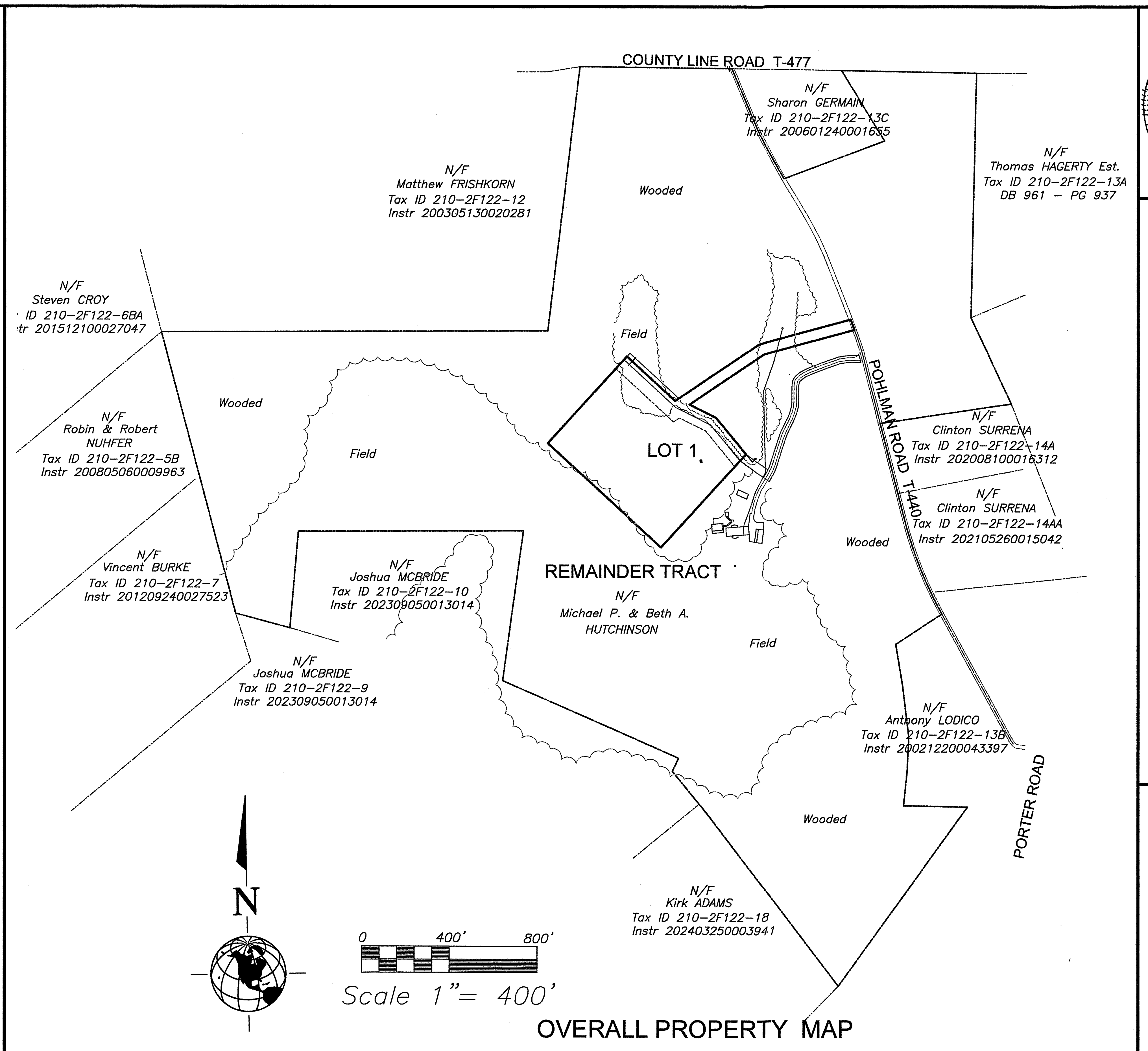

COUNTY LINE ROAD T-477
N/F
Sharon GERMAIN
Tax ID 210-2F122-13C
Instr 200601240001655
N/F
Thomas HAGERTY Est.
Tax ID 210-2F122-13A
DB 961 - PG 937
N/F
Matthew FRISHKORN
Tax ID 210-2F122-12
Instr 200305130020281
Wooded
N/F
Steven CROY
ID 210-2F122-6BA
tr 201512100027047
Field
N/F
Robin & Robert
NUHFER
Tax ID 210-2F122-5B
Instr 200805060009963
Wooded
Field
LOT 1
POHLMAN ROAD T-440
N/F
Clinton SURRENA
Tax ID 210-2F122-14A
Instr 202008100016312
N/F
Clinton SURRENA
Tax ID 210-2F122-14AA
Instr 202105260015042
N/F
Vincent BURKE
Tax ID 210-2F122-7
Instr 201209240027523
N/F
Joshua MCBRIDE
Tax ID 210-2F122-10
Instr 202309050013014
REMAINDER TRACT
N/F
Michael P. & Beth A.
HUTCHINSON
Wooded
Field
N/F
Joshua MCBRIDE
Tax ID 210-2F122-9
Instr 202309050013014
N/F
Anthony LODICO
Tax ID 210-2F122-13B
Instr 200212200043397
PORTER ROAD
Wooded
N/F
Kirk ADAMS
Tax ID 210-2F122-18
Instr 202403250003941
N
0
400'
800'
Scale 1"= 400'

OVERALL PROPERTY MAP

Situated at:
130 POHLMAN ROAD
MARION TOWNSHIP, BUTLER COUNTY, PA

HUTCHINSON
MINOR SUBDIVISION - FINAL PLAN

JAMES A. DAY
REGISTERED PROFESSIONAL LAND SURVEYOR
SU-039394-E

OWNERS ADOPTION

WE, *MICHAEL P.& BETH A. HUTCHINSON* , THE UNDERSIGNED, HEREBY DECLARE THAT *MICHAEL P.& BETH A. HUTCHINSON* ARE THE OWNER OF THE PROPERTIES SHOWN ON THIS FINAL PLAN, THAT THE PROPOSED SUBDIVISION AND LAND DEVELOPMENT WERE MADE WITH THE OWNERS CONSENT, AND THAT THE OWNERS DESIRE THE FINAL PLAN TO BE RECORDED AS SUCH.

IN WITNESS WHEREOF, WE HEREUNTO SET OUR HAND AND SEAL THIS 13 DAY OF October, 2025.

NOTARY PUBLIC Sharon Germain

OWNER

OWNER Beth Hutchinson

ACKNOWLEDGMENT

COMMONWEALTH OF PENNSYLVANIA) SS:
COUNTY OF BUTLER

BEFORE ME, THE SUBSCRIBER, A NOTARY PUBLIC IN AND FOR SAID COMMONWEALTH AND COUNTY, PERSONALLY APPEARED THE ABOVE NAMED *MICHAEL P.& BETH A. HUTCHINSON* , WHO ACKNOWLEDGED THE FOREGOING FINAL PLAN OF SUBDIVISION AND LAND DEVELOPMENT TO BE THEIR ACT AND DEED AND DESIRED THE SAME TO BE RECORDED AS SUCH.

SWORN TO AND SUBSCRIBED BEFORE ME THIS 13 DAY OF October 2025.

MY COMMISSION EXPIRES THE 30 DAY OF April, 2027.

Commonwealth of Pennsylvania - Notary Seal
Sharon Germain, Notary Public
Butler County
My commission expires April 30, 2027
Commission number 1261790
Member, Pennsylvania Association of Notaries

NOTARY PUBLIC SIGNATURE Shen Germain

MUNICIPAL REVIEW

THE BOARD OF SUPERVISORS OF THE TOWNSHIP OF MARION HEREBY GIVES PUBLIC NOTICE THAT IN APPROVING THIS PLAN FOR RECORDING PURPOSES ONLY, THE TOWNSHIP ASSUMES NO OBLIGATIONS, LEGAL OR OTHERWISE, EXPRESSES OR IMPLIED EITHER TO ACCEPT SAID STREETS AS TOWNSHIP STREETS OR ROADS OR GRADE, PAVE AND CURB THE STREETS IN SAID PLAN, OR TO CONSTRUCT SEWERS THEREIN OR TO INSTALL ANY OTHER SUCH SERVICE ORDINARILY INSTALLED IN TOWNSHIP STREETS OR ROADS.

REVIEWED AND APPROVED THIS 8th DAY OF September, 2025.

SECRETARY Michele Burd PRESIDENT

MARION TOWNSHIP BUTLER CO. PENNA Seal

COUNTY PLANNING COMMISSION APPROVAL

APPROVED BY THE BUTLER COUNTY PLANNING COMMISSION THIS 20 DAY OF AUGUST, 2025.

SECRETARY Ron Haslum WT CHAIRMAN

SEAL

SEE COMMENTS ON FILE AT THE BUTLER COUNTY PLANNING COMMISSION

PLAN NUMBER: 25183

PROOF OF RECORDING

COMMONWEALTH OF PENNSYLVANIA)SS:
COUNTY OF BUTLER

RECORDED IN THE RECORDERS OFFICE FOR THE RECORDING OF DEEDS, PLANS, ETC., IN SAID COUNTY, IN PLAN BOOK VOLUME 434, PAGE 20.

GIVEN UNDER MY HAND AND SEAL THIS 12th of November DAY OF 2025.

SEAL RECORDER Michele M Mustello

MICHELE M. MUSTELLO
RECORDER OF DEEDS
My Commission Expires First Monday in January 2028

SURVEYORS CERTIFICATION

I, *JAMES A. DAY*, A REGISTERED SURVEYOR OF THE COMMONWEALTH OF PENNSYLVANIA, DO HEREBY CERTIFY THAT THIS PLAN SHOWN HEREON IS TRUE AND CORRECT TO THE STANDARDS OF THE BUTLER COUNTY SUBDIVISION AND LAND DEVELOPMENT ORDINANCE AND THAT THE SURVEY AND ALL ANGLES, DISTANCES AND COURSES ARE ACCURATELY SHOWN, THAT THE MONUMENTS AND MARKERS AS SHOWN ON THE PLAT HAVE BEEN, OR WILL BE SET, AND TO THE BEST OF MY KNOWLEDGE, THAT THIS PLAN CORRECTLY REPRESENTS THE LOTS, LANDS STREETS AND HIGHWAYS AS SURVEYED AND PLOTTED BY ME FOR THE OWNERS OR AGENTS.

11-09-2025
DATE

James A. Day
REGISTRATION NUMBER # PA-SU039394E

Instr: 202511120018747
Pgs: 1 F: $45.00 11/12/2025 11:43 AM
Michele Mustello T20250015712
Butler County Recorder PA

PLAN NOTES:

1. THIS PLAN PROPOSES A NEW BUILDING LOT, TO BE SERVED BY ONLOT SEWER AND WATER WELL.
2. THE PROPERTIES SHOWN HEREON ARE SUBJECT TO ALL EXCEPTIONS, RESERVATIONS, COVENANTS, CONDITIONS, RESTRICTIONS & CONVEYANCES WHICH APPEAR IN THE INSTRUMENTS, WHICH FORM THE RECORD CHAIN OF TITLE OR WHICH ARE VISIBLE ON THE PREMISES.
3. THESE PROPERTIES ARE NOT IN A FEMA DEFINED FLOODPLAIN.
4. ALL IP SET ARE #5 REBAR, 30" LENGTH, WITH PLASTIC CAP.
5. TOPOGRAPIC GRAPHICS SHOWN HEREON ARE FROM PA SPATIAL DATA, AND REPRESENT 2' CONTOUR INTERVALS.
6. LOT 1 TO BE PROVIDED A 20'WIDE UTILITY EASEMENT FOR INSTALLATION OF WATER AND ELECTRIC SERVICE TO EXISTING WELL #2. EASEMENT ON REMAINDER TRACT IS TO BE CENTERED OVER THE INSTALLED WATER SERVICE LINE AT SUCH TIME SAID LINE IS INSTALLED.
7. PROPOSED NON-PERPETUAL 30' ACCESS EASEMENT, CENTERED OVER EXISTING GRAVEL DRIVEWAY, IS FOR THE INGRESS/EGRESS/UTILITY BENEFIT OF LOT 1 & REMAINDER TRACT. MAINTENANCE IS SHARED EQUALLY. THE CONTINUATION OF THIS EASEMENT IS SUBJECT TO SUBSEQUENT DEED TRANSFERS.
8. PROPOSED PERPETUAL 40' ACCESS EASEMENT, IS FOR THE INGRESS/EGRESS/UTILITY BENEFIT OF LOT 1 & REMAINDER TRACT. MAINTENANCE IS BY LOT 1.
9. THERE ARE NO OBSERVED WETLANDS ON PROPOSED LOT 1. THERE ARE NO PRIME AGRICULTURE LAND ON LOT 1.
10. OWNER OF REMAINDER TRACT RESERVES THE RIGHT OF ACCESS OVER LOT 1 TO EXISTING WATER WELL #1 AND ITS WATERLINE, FOR MAINTENANCE AND INSTALLATION THEREOF EACH.

SOIL TYPES LEGEND

MAP SYMBOL	SOIL NAME	HYDRIC
At	ATKINS SILT LOAM 3 to 8% SLOPES, FREQ. FLOODED	Y
BrB	BRINKERTON SILT LOAM 3 to 8% SLOPES	Y
ClC	CAVODE SILT LOAM 8 to 15% SLOPES	N
ErC	ERNEST SILT LOAM 8 to 15% SLOPES	N
GoB	GILPIN-WEIKERT CHANNERY SILT LOAM 3 to 8% SLOPES	N
GoC	GILPIN-WEIKERT CHANNERY SILT LOAM 8 to 15% SLOPES	N
GoF	GILPIN-WEIKERT CHANNERY SILT LOAM 25 to 70% SLOPES	N
GpC	GILPIN-WHARTON SILT LOAMS 8 to 15% SLOPES	N
GpD	GILPIN-WHARTON COMPLEX 15 to 25% SLOPES	N

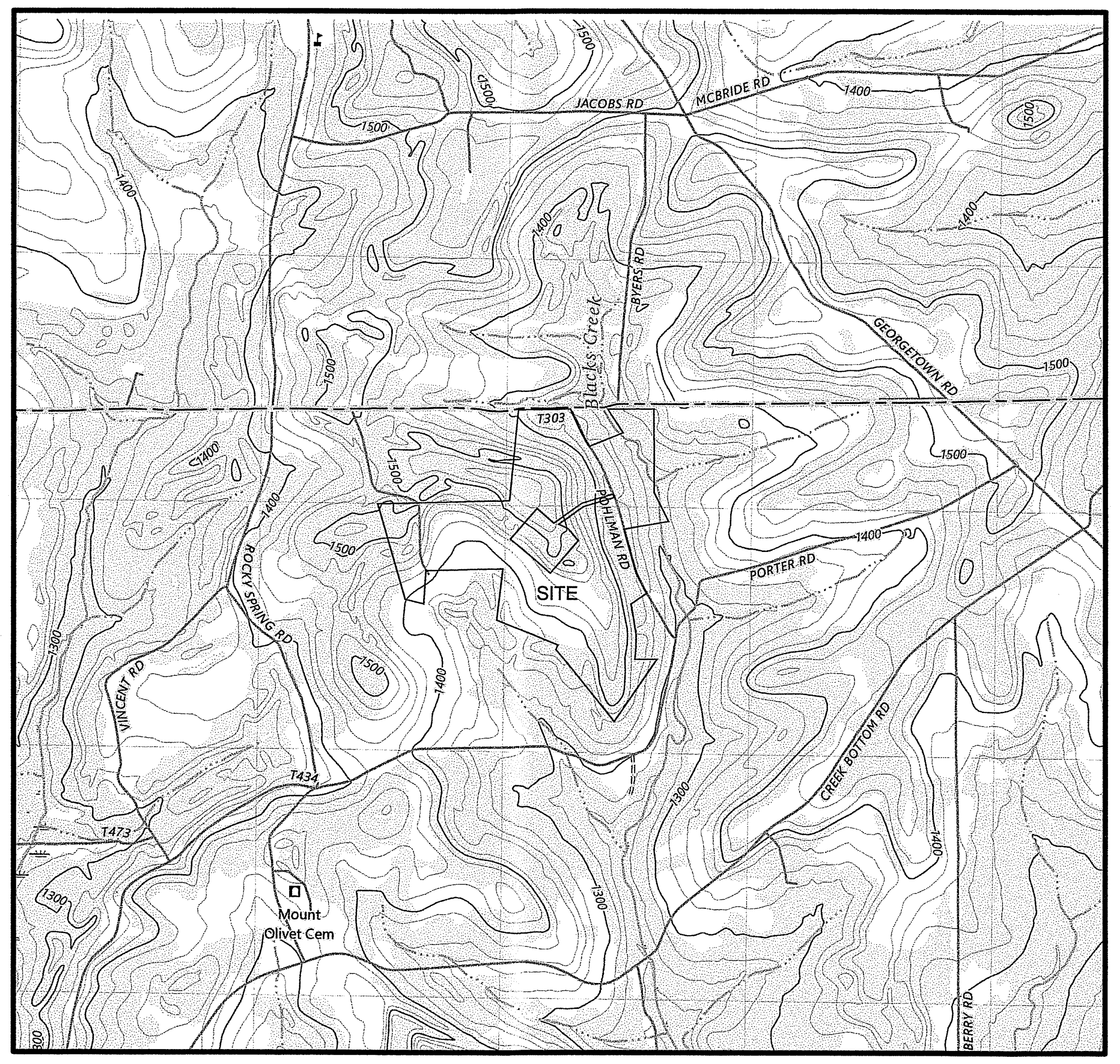

JACOBS RD
MCBRIDE RD
GEORGETOWN RD
PORTER RD
POHLMAN RD
SITE
Mount Olivet Cem
BERRY RD

USGS LOCATION MAP
Scale: 1"=2000'
Barkeyville, PA USGS Quad 2019

SUBDIVISION OWNERS CONTACT:
MICHAEL & BETH HUTCHINSON
130 POHLMAN RD.
HARRISVILLE, PA 16038

RECORDED	
PLAN BOOK	PAGE
434	**20**

JAMES A. DAY , P.E.,P.L.S.
CONSULTING ENGINEERING
AND SURVEYING SERVICES
304 Beech Road
Butler, PA 16001
Ph/Fax: 724-283-3267
email: jadmday@msn.com

DRAWING DATE: 08-11-2025
SHEET 1/1

Instr: 202511120018748
Pgs: 1 F: $45.00
Michele Mustello
Butler County Recorder PA
11/12/2025 11:43 AM
T20250015712

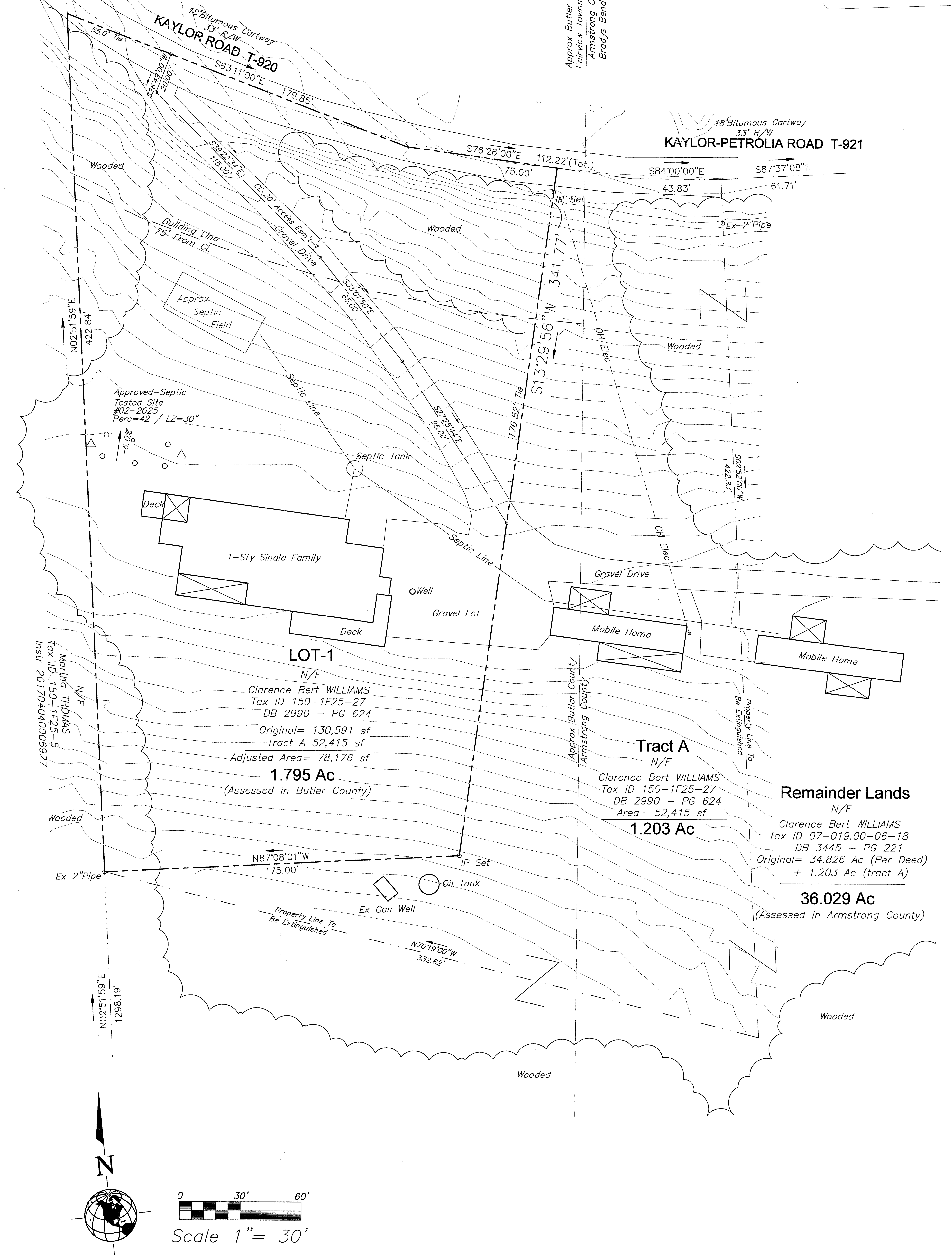
KAYLOR ROAD T-920
18'Bitumous Cartway
33' R/W
55.0' Tie
S26°49'00"W
20.00'
S63°11'00"E
179.85'
Approx Butler County
Fairview Township
Armstrong County
Bradys Bend Township
18'Bitumous Cartway
33' R/W
KAYLOR-PETROLIA ROAD T-921
S76°26'00"E
112.22'(Tot.)
75.00'
S84°00'00"E
43.83'
S87°37'08"E
61.71'
IR Set
Ex 2"Pipe
Wooded
S39°22'34"E
115.00'
CL 20' Access Esm't-1
Gravel Drive
Building Line
75' From CL
Approx
Septic
Field
S33°01'50"E
65.00'
S13°29'56"W 341.77'
OH Elec
N02°51'59"E
422.84'
Approved-Septic
Tested Site
#02-2025
Perc=42 / LZ=30"
-6.0%
Septic Line
Septic Tank
S27°25'44"E
95.00'
176.52' Tie
S02°52'00"W
422.83'
Deck
1-Sty Single Family
Well
Gravel Lot
Deck
Gravel Drive
Mobile Home
Mobile Home
LOT-1
N/F
Clarence Bert WILLIAMS
Tax ID 150-1F25-27
DB 2990 - PG 624
Original= 130,591 sf
-Tract A 52,415 sf
Adjusted Area= 78,176 sf
1.795 Ac
(Assessed in Butler County)
N/F
Martha THOMAS
Tax ID 150-1F25-5
Instr 201704040006927
Approx Butler County
Armstrong County
Tract A
N/F
Clarence Bert WILLIAMS
Tax ID 150-1F25-27
DB 2990 - PG 624
Area= 52,415 sf
1.203 Ac
Property Line To
Be Extinguished
Remainder Lands
N/F
Clarence Bert WILLIAMS
Tax ID 07-019.00-06-18
DB 3445 - PG 221
Original= 34.826 Ac (Per Deed)
+ 1.203 Ac (tract A)
36.029 Ac
(Assessed in Armstrong County)
N87°08'01"W
175.00'
IP Set
Ex 2"Pipe
Oil Tank
Ex Gas Well
Property Line To
Be Extinguished
N70°19'00"W
332.62'
N02°51'59"E
1298.19'
Wooded
N
0
30'
60'
Scale 1"= 30'

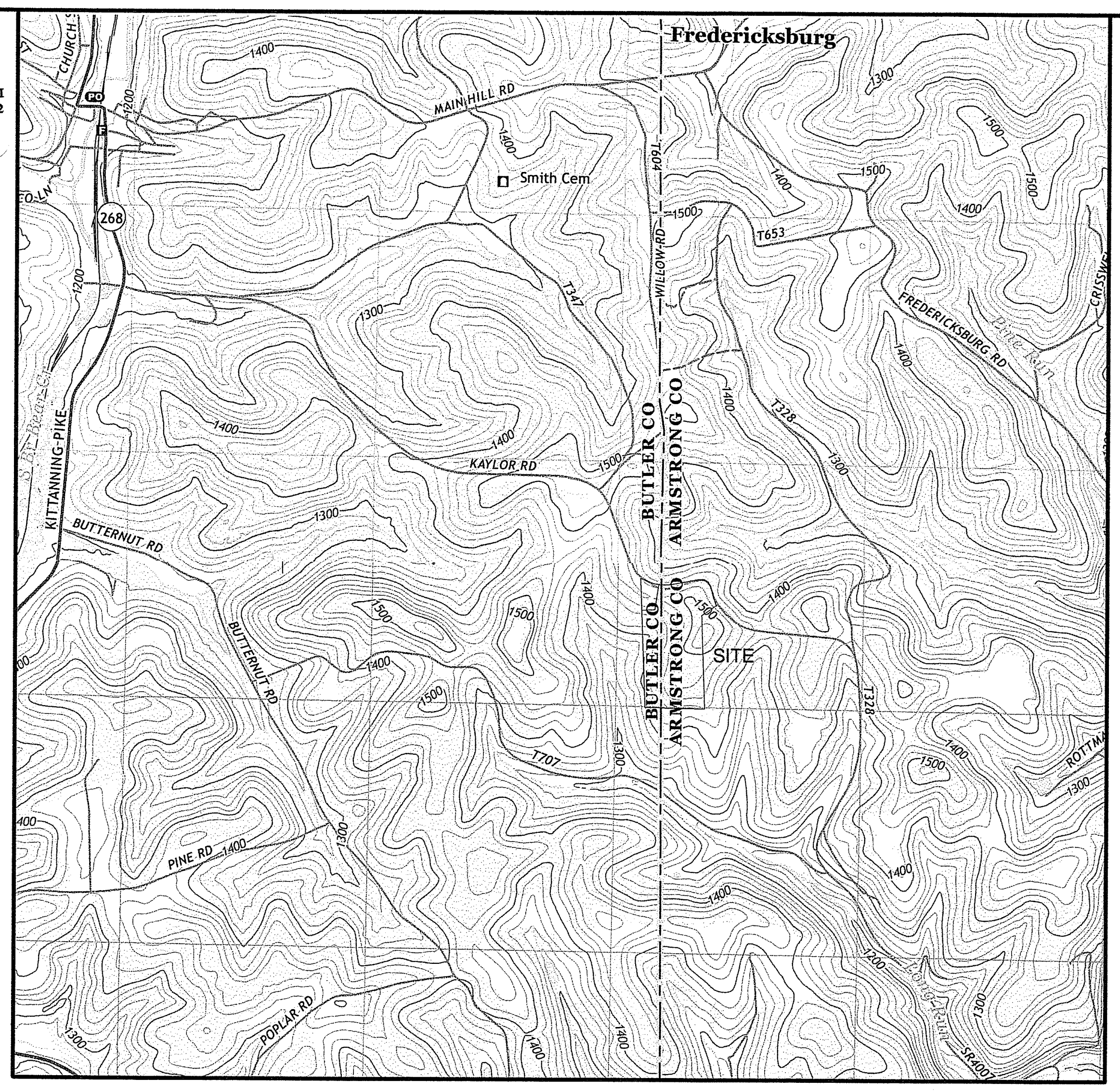
Fredericksburg
Smith Cem
KAYLOR RD
BUTLER CO
ARMSTRONG CO
SITE
KITTANNING PIKE
BUTTERNUT RD
PINE RD
POPLAR RD
FREDERICKSBURG RD

USGS LOCATION MAP

Scale: 1"=2000'

Parker, PA USGS Quad 2019

Chicora, PA USGS Quad 2019

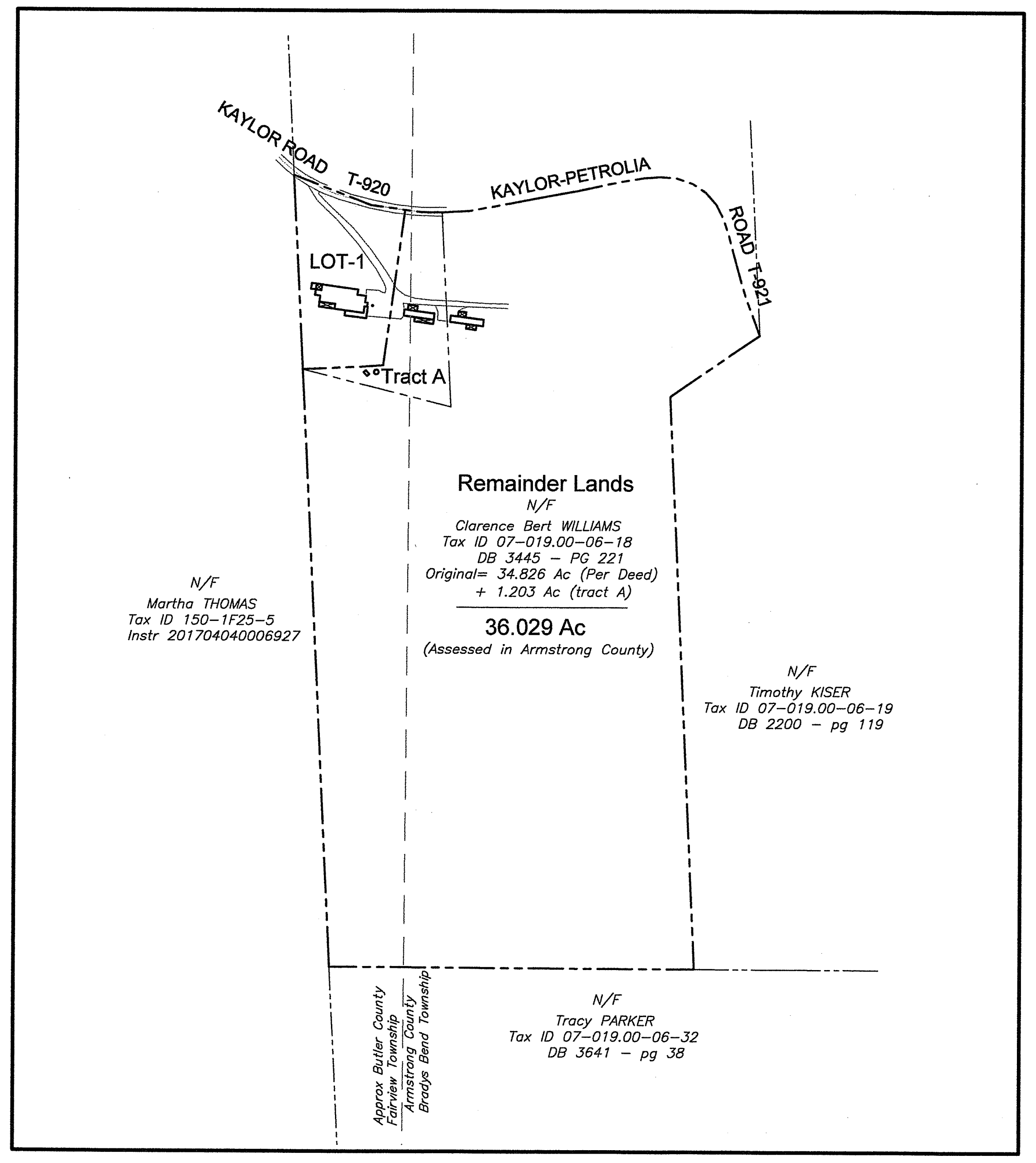
KAYLOR ROAD T-920
KAYLOR-PETROLIA ROAD T-921
LOT-1
Tract A
Remainder Lands
N/F
Clarence Bert WILLIAMS
Tax ID 07-019.00-06-18
DB 3445 - PG 221
Original= 34.826 Ac (Per Deed)
+ 1.203 Ac (tract A)
36.029 Ac
(Assessed in Armstrong County)
N/F
Martha THOMAS
Tax ID 150-1F25-5
Instr 201704040006927
N/F
Timothy KISER
Tax ID 07-019.00-06-19
DB 2200 - pg 119
N/F
Tracy PARKER
Tax ID 07-019.00-06-32
DB 3641 - pg 38
Approx Butler County
Fairview Township
Armstrong County
Bradys Bend Township

OVERALL PROPERTY PLAN

Scale: 1"= 300'

OWNERS ADOPTION

I, *CLARENCE B. WILLIAMS* , THE UNDERSIGNED, HEREBY DECLARE THAT *CLARENCE B. WILLIAMS* IS THE OWNER OF THE PROPERTIES SHOWN ON THIS FINAL PLAN, THAT THE PROPOSED LOT LINE REVISIONS WERE MADE WITH THE OWNERS CONSENT, AND THAT THE OWNER DESIRES THE FINAL PLAN TO BE RECORDED AS SUCH.

IN WITNESS WHEREOF, WE HEREUNTO SET OUR HAND AND SEAL THIS 11TH DAY OF November, 2025.

NOTARY PUBLIC ______ OWNER Clarence B Williams

ACKNOWLEDGMENT

COMMONWEALTH OF PENNSYLVANIA) SS:
COUNTY OF BUTLER

BEFORE ME, THE SUBSCRIBER, A NOTARY PUBLIC IN AND FOR SAID COMMONWEALTH AND COUNTY, PERSONALLY APPEARED THE ABOVE NAMED *CLARENCE B. WILLIAMS*, WHO ACKNOWLEDGED THE FOREGOING FINAL PLAN OF LOT LINE REVISION TO BE HIS ACT AND DEED AND DESIRED THE SAME TO BE RECORDED AS SUCH.

SWORN TO AND SUBSCRIBED BEFORE ME THIS 11TH DAY OF November, 2025.

MY COMMISSION EXPIRES THE 30TH DAY OF May, 2029.

Commonwealth of Pennsylvania - Notary Seal
Stephen M. Davanzati, Notary Public
Butler County
My commission expires May 30, 2029
Commission number 1313121
Member, Pennsylvania Association of Notaries

NOTARY PUBLIC SIGNATURE ______

MUNICIPAL REVIEW

THE BOARD OF SUPERVISORS OF THE TOWNSHIP OF FAIRVIEW HEREBY GIVES PUBLIC NOTICE THAT IN APPROVING THIS PLAN FOR RECORDING PURPOSES ONLY, THE TOWNSHIP ASSUMES NO OBLIGATIONS, LEGAL OR OTHERWISE, EXPRESSES OR IMPLIED EITHER TO ACCEPT SAID STREETS AS TOWNSHIP STREETS OR ROADS OR GRADE, PAVE AND CURB THE STREETS IN SAID PLAN, OR TO CONSTRUCT SEWERS THEREIN OR TO INSTALL ANY OTHER SUCH SERVICE ORDINARILY INSTALLED IN TOWNSHIP STREETS OR ROADS.

REVIEWED AND APPROVED THIS 10th DAY OF November, 2025.

SECRETARY Dusty D. Dudzic PRESIDENT Dennis E Bryan

BOARD OF SUPERVISORS FAIRVIEW TOWNSHIP BUTLER CO. PA

COUNTY PLANNING COMMISSION APPROVAL

APPROVED BY THE BUTLER COUNTY PLANNING COMMISSION THIS 15 DAY OF OCTOBER, 2025.

SECRETARY Ron Henshaw VP CHAIRMAN Jesse Hines VP

SEAL

SEE COMMENTS ON FILE AT THE BUTLER COUNTY PLANNING COMMISSION

PLAN NUMBER: 25240

PROOF OF RECORDING

COMMONWEALTH OF PENNSYLVANIA)SS:
COUNTY OF BUTLER

RECORDED IN THE RECORDERS OFFICE FOR THE RECORDING OF DEEDS, PLANS, ETC., IN SAID COUNTY, IN PLAN BOOK VOLUME 434, PAGE 21.

GIVEN UNDER MY HAND AND SEAL THIS 12th DAY OF November 2025.

SEAL RECORDER Michele M. Mustello

MICHELE M. MUSTELLO
RECORDER OF DEEDS
My Commission Expires First Monday In January 2028

SURVEYORS CERTIFICATION

I, *JAMES A. DAY*, A REGISTERED SURVEYOR OF THE COMMONWEALTH OF PENNSYLVANIA, DO HEREBY CERTIFY THAT THIS PLAN SHOWN HEREON IS TRUE AND CORRECT TO THE STANDARDS OF THE BUTLER COUNTY SUBDIVISION AND LAND DEVELOPMENT ORDINANCE AND THAT THE SURVEY AND ALL ANGLES, DISTANCES AND COURSES ARE ACCURATELY SHOWN, THAT THE MONUMENTS AND MARKERS AS SHOWN ON THE PLAT HAVE BEEN, OR WILL BE SET, AND TO THE BEST OF MY KNOWLEDGE, THAT THIS PLAN CORRECTLY REPRESENTS THE LOTS, LANDS STREETS AND HIGHWAYS AS SURVEYED AND PLOTTED BY ME FOR THE OWNERS OR AGENTS.

11-10-2025
DATE

James A. Day
REGISTRATION NUMBER # PA-SU039394E

PLAN NOTES:

1. THIS PLAN PROPOSES A LOT LINE REVISION TO RECONFIGURE AN EXISTING BUILDING LOT. NO NEW BUILDING LOT IS CREATED.
2. THE PROPERTIES SHOWN HEREON ARE SUBJECT TO ALL EXCEPTIONS, RESERVATIONS, COVENANTS, CONDITIONS, RESTRICTIONS & CONVEYANCES WHICH APPEAR IN THE INSTRUMENTS, WHICH FORM THE RECORD CHAIN OF TITLE OR WHICH ARE VISIBLE ON THE PREMISES.
3. THESE PROPERTIES ARE NOT IN A FEMA DEFINED FLOODPLAIN.
4. ALL IP SET ARE #5 REBAR, 30" LENGTH, WITH PLASTIC CAP.
5. PERPETUAL ACCESS EASEMENT-1 IS FOR THE SHARED USE BY LOT 1 AND REMAINDER LANDS FOR INGRESS/EGRESS AND UTILITY PURPOSES. MAINTENANCE RESPONSIBILITIES OF THE ACCESS EASEMENT-1 ARE SHARED BETWEEN LOT 1 OWNER AND REMAINDER LANDS OWNER.
6. EXISTING MOBILE HOMES ON REMAINDER LANDS JOINTLY SHARE WELL WATER SERVICE AND ONLOT SEWAGE. REMAINDER LANDS OWNER RESERVES THE RIGHTS TO ACCESS, REPAIR, REPLACE AND EXCAVATE THESE SERVICES AS WARRANTED.
7. TRACT A IS NOT A SEPARATE BUILDING LOT AND IS TO BE CONVEYED AND BECOME PART OF REMAINING LANDS OF CLARENCE B. WILLIAMS.
8. A SEPARATE PLAN IS RECORDED IN ARMSTRONG COUNTY TO CORRECT THE REMAINDER LANDS TAX ASSESSMENT AREA QUANTITY.
9. THE APPROVED SEPTIC TEST SITE SHOWN ON LOT 1 IS FOR THE EXCLUSIVE USE BY LOT 1 BUILDING ONLY, AS A BACKUP SEPTIC SITE.
10. TOPOGRAPHICAL GRAPHICS SHOWN ON LOT 1 ARE DERIVED FROM PASDA AND REPRESENT 2' CONTOUR INTERVALS.

SUBDIVISION OWNER CONTACT:
CLARENCE B. WILLIAMS
284 KAYLOR ROAD
PO BOX 116
PETROLIA, PA 16050

RECORDED	
PLAN BOOK	PAGE
434	**21**

JAMES A. DAY
SU-039394-E

Situated at:
284 KAYLOR ROAD
FAIRVIEW TOWNSHIP, BUTLER COUNTY, PA
& BRADYS BEND TOWNSHIP, ARMSTRONG COUNTY, PA

C.B. WILLIAMS LOT LINE REVISION
MINOR SUBDIVISION FINAL PLAN

JAMES A. DAY , P.E.,P.L.S.
CONSULTING ENGINEERING
AND SURVEYING SERVICES
304 Beech Road
Butler, PA 16001
Ph/Fax: 724-283-3267
email: jadmday@msn.com

DRAWING DATE: 11-09-2025
SHEET 1 / 1

Instr: 202511140018966
Pgs: 3 F: $125.00 11/14/2025 10:41 AM
Michele Mustello T20250015889
Butler County Recorder PA

LOT CONSOLIDATION PLAN
FOR
CRANBERRY TOWNSHIP COMMUNITY PARK NORTH
BUTLER COUNTY, PENNSYLVANIA
APRIL 2025

Cranberry Township

OWNER'S ADOPTION

WE, OWNER OF LANDS SHOWN ON THIS PLAN HEREBY ADOPT THIS PLAN AS THEIR LOT CONSOLIDATION PLAN. THIS ADOPTION AND DEDICATION SHALL BE BINDING UPON THE PARTNERSHIP AND UPON HEIRS, EXECUTORS, AND ASSIGNS.

Nancy A. Auer
SIGNATURE OF WITNESS

Bruce W. H
SIGNATURE OF ~~OWNER~~ X REPRESENTATIVE

Bruce W. Hezlep
NAME OF ~~OWNER~~ / REPRESENTATIVE

8/27/25
DATE

COMMONWEALTH OF PENNSYLVANIA) SS:
COUNTY OF BUTLER)

BEFORE ME, THE UNDERSIGNED NOTARY PUBLIC IN AND FOR THE COMMONWEALTH OF PENNSYLVANIA AND THE COUNTY OF BUTLER, PERSONALLY APPEARED THE ABOVE NAMED Bruce W. Hezlep AND ACKNOWLEDGED THE FOREGOING ADOPTION AND DEDICATION TO BE HIS ACT.

WITNESS MY HAND AND NOTARIAL SEAL THIS 27th DAY OF August, 2025.

MY COMMISSION EXPIRES THE 5th DAY OF February, 2029.
(SEAL)

Commonwealth of Pennsylvania - Notary Seal
Nancy A. Auer, Notary Public
Butler County
My commission expires February 5, 2029
Commission number 1004451
Member, Pennsylvania Association of Notaries

Nancy A. Auer
NOTARY PUBLIC

MUNICIPAL DECLARATIONS (PREVIOUS ACCEPTANCE OF STREET DEDICATION)

THE BOARD OF SUPERVISORS OF THE TOWNSHIP OF CRANBERRY, HEREBY GIVES NOTICE THAT IN APPROVING THIS PLAN FOR RECORDING, THE TOWNSHIP OF CRANBERRY HAS NOT ACCEPTED ANY ADDITIONAL DEDICATION OF ANY STREETS, LAND OR PUBLIC FACILITIES. THE STREETS AS SHOWN HEREON WERE PREVIOUSLY DEDICATED, ACCEPTED AND RECORDED AT PLAN BOOK 254 PAGE 23, AUGUST 30, 2002..

SECRETARY

Bruce W. H
CHAIRMAN, BOARD OF SUPERVISORS

MUNICIPAL REVIEW AND APPROVAL

THIS STATEMENT CERTIFIES ONLY THAT ACTION WAS TAKEN BY THE BOARD OF SUPERVISORS GRANTING FINAL APPROVAL. APPROVED BY BOARD OF SUPERVISORS OF THE TOWNSHIP OF CRANBERRY BY ~~ORDINANCE~~/RESOLUTION No. 2025-41, ON THE 27th DAY OF August, 2025.

SECRETARY

Bruce W. H
CHAIRMAN, BOARD OF SUPERVISORS

(SEAL)

SURVEY NOTES

1. THE SUBJECT PROPERTY LINES FOR THE PURPOSE OF THIS LOT CONSOLIDATION HAVE BEEN ESTABLISHED THROUGH A FIELD BOUNDARY SURVEY BY HERBERT, ROWLAND AND GRUBIC, INC. PERFORMED IN MARCH 2025.
2. THIS SURVEY HORIZONTALLY REFERENCES THE PENNSYLVANIA STATE PLANE, SOUTH ZONE, 3702, NORTH AMERICAN DATUM OF (NAD83) NORTH AMERICAN VERTICAL DATUM OF 1988 (NAVD88).
3. THE LOCATIONS OF UTILITIES AS SHOWN HEREON ARE BASED ON ABOVEGROUND FEATURES, FIELD OBSERVATIONS/SURVEY, AND RECORD DRAWINGS PROVIDED BY UTILITY COMPANIES. LOCATIONS OF UNDERGROUND UTILITIES/STRUCTURES MAY VARY FROM LOCATIONS SHOWN HEREON. ADDITIONAL BURIED UTILITIES/STRUCTURES MAY BE ENCOUNTERED. NO EXCAVATIONS WERE MADE DURING THE PROGRESS OF THIS SURVEY TO LOCATE BURIED UTILITIES/STRUCTURES. IT SHALL BE THE CONTRACTORS RESPONSIBILITY TO FIELD VERIFY THE EXACT LOCATION AND DEPTH OF ALL UTILITY LINES PRIOR TO THE START OF ANY CONSTRUCTION ACTIVITIES.
4. THIS SURVEY PREPARED WITHOUT THE BENEFIT OF A TITLE REPORT.
5. THIS SURVEY IS NOT INTENDED TO ALTER ANY EASEMENTS, RESTRICTIONS OR RESERVATIONS SHOWN ON PREVIOUS RECORDS

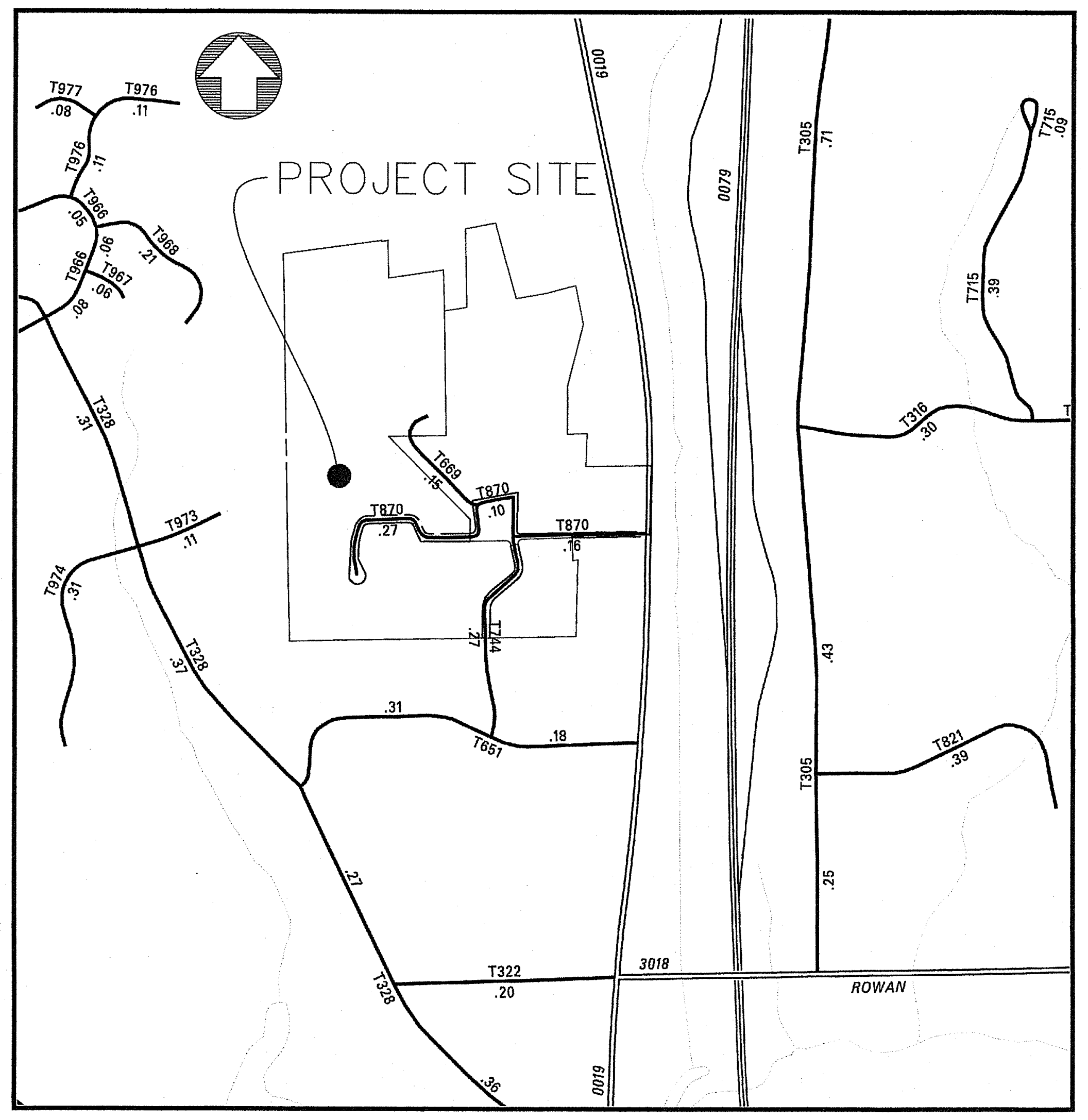

BUTLER COUNTY PENNDOT TYPE 5

LOCATION MAP

SCALE: 1 INCH = ± 1000 FEET

CERTIFICATION OF SURVEYOR

I, PAUL L. SAMPLE, HEREBY CERTIFY THAT I AM A REGISTERED LAND SURVEYOR, IN COMPLIANCE WITH THE LAWS OF THE COMMONWEALTH OF PENNSYLVANIA; THAT THIS PLAT CORRECTLY REPRESENTS A SURVEY COMPLETED BY ME ON APRIL, 2025; THAT ALL THE MONUMENTS SHOWN THEREON ACTUALLY EXIST; AND THAT THEIR LOCATION, SIZE, TYPE AND MATERIAL ARE ACCURATELY SHOWN.

Paul L Sample
SURVEYOR

7-3-2025
(DATE)

SU075659
SURVEYOR NO.

PAUL LAWRENCE SAMPLE
SU075659

AREA TABLE

PARCEL NUMBER 130-4F108-6	– (28.265 AC)	1,231,223 SQ FT
PARCEL NUMBER 130-4F108-7	– (15.530 AC)	676,487 SQ FT
PARCEL NUMBER 130-4F108-8	– (67.283 AC)	2,930,847 SQ FT
TOTAL AREA	– (111.078 AC)	4,838,557 SQ FT
LOT 1 AREA	– (71.410 AC)	3,110,620 SQ FT
LOT 2 AREA	– (39.668 AC)	1,727938 SQ FT
TOTAL AREA	– (111.078 AC)	4,838,557 SQ FT

SURVEYOR

HERBERT, ROWLAND & GRUBIC, INC.
220 WEST KENSINGER DRIVE, SUITE 100
CRANBERRY TOWNSHIP, PA 16066
CONTACT: PAUL L. SAMPLE, P.L.S.
PHONE: (724) 779–4777
FAX: (724) 779–4711
EMAIL: psample@hrg–inc.com

OWNER

CRANBERRY TOWNSHIP
152 MAOR ROAD
CRANBERRY TOWNSHIP, PA 15606

TOWNSHIP MANAGER APPROVAL

I, Daniel D. Santoro, TOWNSHIP MANAGER FOR THE TOWNSHIP OF CRANBERRY, CERTIFY THAT THE CONDITIONS FOR FINAL APPROVAL OUTLINED IN ~~ORDINANCE~~/RESOLUTION NO. 2025-41 HAVE BEEN MET IN ACCORDANCE WITH SECTIONS 22-305 AND 22-307 OF THE TOWNSHIP OF CRANBERRY CODE OF ORDINANCES.

TOWNSHIP MANAGER

MUNICIPAL ENGINEER'S CERTIFICATE

I, Michael C Malak, A REGISTERED PROFESSIONAL ENGINEER, THE TOWNSHIP ENGINEER FOR CRANBERRY TOWNSHIP, DO HEREBY CERTIFY THAT THIS LOT CONSOLIDATION PLAN MEETS ALL ENGINEERING AND DESIGN REQUIREMENTS OF THE TOWNSHIP ORDINANCES EXCEPT AS DEPARTURES HAVE BEEN AUTHORIZED BY THE CRANBERRY TOWNSHIP BOARD OF SUPERVISORS.

SIGNATURE

PE-073220
REGISTRATION NUMBER

MICHAEL C MALAK
PE-073220

CERTIFICATION OF TITLE (NO MORTGAGE)

I HEREBY CERTIFY THAT THE TITLE TO THE PROPERTIES CONTAINED IN THE Community Park North ARE IN THE NAME OF CRANBERRY TOWNSHIP AND ARE RECORDED IN THE FOLLOWING 6 INSTRUMENTS:
(1) DEED BOOK VOLUME 771, PAGE 238, (2) DEED BOOK VOLUME 907. PAGE 549, (3) DEED BOOK VOLUME 1028. PAGE 400, (4) INSTRUMENT 200512290037144, (5) INSTRUMENT 200004260009207, (6) PBV 374 PAGE 24.
I FURTHER CERTIFY THAT THERE IS NO MORTGAGE, LIEN, OR OTHER ENCUMBRANCE AGAINST THIS PROPERTY.

Nancy A. Auer
WITNESS

Bruce W. H
SIGNATURE OF OWNER

Bruce W. Hezlep
NAME OF OWNER

COUNTY PLANNING COMMISSION REVIEW STATEMENT

REVIEWED BY THE BUTLER COUNTY PLANNING COMMISSION ON THIS 16th DAY OF April, 2025.

J. Hines MKG
CHAIRMAN, BUTLER COUNTY PLANNING COMMISSION

R. Henshaw MKG
SECRETARY

PLAN # 25081

PROOF OF RECORDING

RECORDED IN THE OFFICE OF THE RECORDER OF DEEDS OF COUNTY OF BUTLER, COMMONWEALTH OF PENNSYLVANIA, IN PLAN BOOK VOLUME 434, PAGE(S) 22-24

GIVEN UNDER MY HAND AND SEAL THIS 14th DAY OF NOVEMBER, 2025

(SEAL)

Michele M Mustello
RECORDER OF DEEDS

MICHELE M. MUSTELLO
RECORDER OF DEEDS

My Commission Expires First Monday in January 2028

PLAN BOOK	PAGE
434	22

THIS SHEET NOT VALID WITHOUT SHEET 2 AND 3

HRG
HERBERT, ROWLAND & GRUBIC, INC.
220 WEST KENSINGER DRIVE
SUITE 100
CRANBERRY TOWNSHIP, PA 16066
724.779.4777 | hrg-inc.com

PROFESSIONAL SEAL:

LOT CONSOLIDATION PLAN
FOR
CRANBERRY TOWNSHIP

CRANBERRY TOWNSHIP
152 MANOR RD
CRANBERRY TWP, PENNSYLVANIA 16066
CRANBERRY TOWNSHIP - BUTLER COUNTY - PENNSYLVANIA

REVISIONS

NO.	DATE	DESCRIPTION
1		
2		
3		
4		
5		
6		
7		
8		

HRG PROJECT NUMBER:	1261.0555
PLAN DATE:	APRIL 7, 2025
DRAWING SCALE:	1" = 80'
PROJ. MANAGER:	A. HATTEN

SHEET TITLE:
COMMUNITY PARK NORTH

SHEET:
1 OF 3

PLAN BOOK	PAGE
434	23

MANOR ROAD (PRIVATE ROAD) 14' R/W
Floyd S. & Carol K. Levison Parcel #: 130-4F108-7T
Cynthia & Daryl Peterson Parcel #: 130-4F108-7B
Robin A Hay Parcel #: 130-4F108-7A
William J. & Patricia L. Shepherd Parcel #: 130-4F108-5
S1°13'06"E 7.00'
5/8" Iron Pin (Fnd) "Cranberry Township"
N81°39'54"E 39.42'
649.74'
5/8" Iron Pin (Fnd) "Cranberry Township"
5/8" Iron Pin (Fnd) "Cranberry Township"
Penn Power Co. Pole as Called in D.B. 2247 Pg. 66
Iron Pin (Set)
N82°09'54"E
15' Building Line
2528.52'
Pennsylvania Power Company Electric/Telephone Right-of-Way D.B. Vol 496 Pg. 157
West Penn Power Company 200' Right-of-Way D.B. Vol 953 Pg. 207
S0°58'19"E
Future Right-Of-Way Area = 0.193 Acres
23' Additional Right-of-Way to be offered for dedication to the public for roadway widening at a later date
Robin A. Hay Parcel #: 130-4F108-6A
240.95'
5/8" Iron Pin (Fnd) "Cranberry Township"
N81°39'54"E
15' Building Line
364.56'
Bolt (Fnd) Slightly Bent
5/8" Iron Pin (Fnd) Aluminum Cap w/o Markings
Andrew T. & Linda S. Barnes Parcel #: 130-4F108-7D
5/8" Iron Pin (Fnd) Aluminum Cap w/o Markings
S0°58'21"E
268.99'
5/8" Iron Pin (Fnd)
N79°50'31"E 149.98'
Iron Pin (Set)
N0°58'21"W
510.11'
Dump Area
N79°47'59"E
199.55'
50' Building Line
15' Building Line
6' Chainlink w/ steel outbuilding
Possible Well
5/8" Iron Pin (Fnd) "Tait"
S15°08'33"E
252.00'
Ronald J. & Barbara A. Kleppick Parcel #: 130-4F108-7J
William J. Schaudt, Jr Parcel #: 130-4F108-7E
5/8" Iron Pin (Fnd)
5/8" Iron Pin (Fnd) Bent
S15°08'33"E
15' Building Line
Steven B. Harold Parcel #: 130-4F108-7F
255.36'
Iron Pin (Set)
5/8" Iron Pin (Fnd) "Tait" (2)
Iron Pin (Set)
N75°04'27"E
199.04'
N80°03'47"E 100.00'
S15°08'33"E 0.55'
N80°03'47"E 100.00'
Barron Agency, Inc. Parcel #: 130-4F108-7L
Iron Pin (Set)
S11°20'54"E
20811 Perry Realty, LLC Parcel #: 130-4F108-7S
258.90'
1" Iron Pin (Fnd)
S74°10'02"W
15' Building Line
412.06'
Iron Pin (Set)
S0°00'00"E
314.41'
Iron Pin (Set)
N89°07'12"E 127.50'
3/4" Iron Pin (Fnd)
5/8" Iron Pin (Fnd)
S1°10'46"W
Gigliotti Holdings, LP Parcel #: 130-4F108-7U
PERRY HIGHWAY - ROUTE 19 120' Right-of-Way
Lot 1
71.410 Acres (3110615 ft²)
Parcel #: 130-4F108-6 Instrument #: 200512290037144 PBV 289, Page 19 28.265 Acres (1231220 ft²) – Per Survey
Approximate Location 75' Gas Line Right-of-Way
Bekins Hillside Venture Parcel #: 130-4F108-13L
3/4" Iron Pin (Fnd)
5/8" Iron Pin (Fnd)
3/4" Iron Pin (Fnd)
LOT LINE TO BE REMOVED
Iron Pin (Set)
376.07'
S44°54'3
S89°03'03"W
812.76'
5/8" Iron Pin (Fnd)
5/8" Iron Pin (Fnd) Bent
15' Building Line
Parcel #: 130-4F108-8 Instrument #: 200004260009207 Lot 2: PBV 232, Page 4 4.560 Acres (198622 ft²) – Per Survey
LOT LINE TO BE REMOVED
Parcel #: 130-4F108-7 Lot 2: PBV 374, Page 24 15.530 Acres (676484 ft²) – Per Survey
Lot 2
39.668 Acres (1727925 ft²)
Match Line See Sheet 3 of 3
LOT LINE TO BE REMOVED

THIS SHEET NOT VALID WITHOUT SHEET 1 AND 3

HRG

HERBERT, ROWLAND & GRUBIC, INC.
220 WEST KENSINGER DRIVE
SUITE 100
CRANBERRY TOWNSHIP, PA 16066
724.779.4777 | hrg-inc.com

PROFESSIONAL SEAL:

LOT CONSOLIDATION PLAN
FOR
CRANBERRY TOWNSHIP

CRANBERRY TOWNSHIP
152 MANOR RD
CRANBERRY TWP, PENNSYLVANIA 16066

CRANBERRY TOWNSHIP - BUTLER COUNTY - PENNSYLVANIA

REVISIONS		
NO.	DATE	DESCRIPTION
1		
2		
3		
4		
5		
6		
7		
8		

80' 40' 0' 80'
SCALE IN FEET

HRG PROJECT NUMBER:	1261.0555
PLAN DATE:	APRIL 7, 2025
DRAWING SCALE:	1" = 80'
PROJ. MANAGER:	A. HATTEN

SHEET TITLE:
COMMUNITY PARK NORTH IMPROVEMENTS

SHEET:
2 OF 3

Match Line See Sheet 2 of 3
LOT LINE TO BE REMOVED
376.07'
S89°03'03"W
812.76'
Iron Pin (Set)
5/8" Iron Pin (Fnd)
5/8" Iron Pin (Fnd) Bent
5/8" Iron Pin (Fnd)
3/4" Iron Pin (Fnd)
S44°54'35"E
LOT LINE TO BE REMOVED
Lot 1
71.410 Acres (3110615 ft²)
New York State Natural Gas Corporation D.B. Vol 606 Pg. 214 50' Right-of-Way
314.41'
Iron Pin (Set)
N89°07'12"E
127.50'
3/4" Iron Pin (Fnd)
5/8" Iron Pin (Fnd)
S1°10'46"W
Cranberry Township Properties, LLC
Parcel #: 130-4F108-8A
N88°46'38"E
60.03'
213.64'
5/8" Iron Pin (Fnd) "Shaw"
5/8" Iron Pin (Fnd) "Shaw"
N88°46'38"E
364.24'
R=5729.65'
L=86.75'
CH=S0°51'36"W
DIST=86.75'
S1°21'21"W
Parcel #: 130-4F108-8
Deed Book 1028, Page 400
11.971 Acres (521441 ft²) – Per Survey
50' Building Line
Lot 2
39.668 Acres (1727925 ft²)
100' Building Line
Parcel #: 130-4F108-8
Deed Book 771, Page 238
20.041 Acres (872977 ft²) – Per Survey
50' Building Line
759.88'
Iron Pin (Set)
Existing Utility Easement See Dwg. 32D-42b
50' Building Line
50' Building Line
361.65'
AVG-Coventry, LLC
Parcel #: 130-4F108-13KB
S0°40'41"E
143.25'
ERNIE MASHUDA DRIVE
S88°42'12"W
502.73'
POB Lot #2
POC Lot #1
LOT LINE TO BE REMOVED
331.54'
N88°24'57"E
5/8" Iron Pin (Fnd)
S1°17'48"E
15.00'
POB Lot #1
Thunder Developments, LLC
Parcel #: 130-4F108-9G
5/8" Iron Pin (Fnd)
Existing Utility Easement See Dwg. 32D-42b
Iron Pin (Set)
N89°19'19"E
235.67'
Radius=25.00'
Length=34.28'
Δ=78°34'15"
CH. Bearing=S51°23'34"E
Ch. Distance=31.66'
Radius=25.00'
Length=43.86'
Δ=100°31'42"
CH. Bearing=N38°09'16"E
Ch. Distance=38.45'
50' Building Line
S1°17'48"E
147.18'
5/8" Iron Pin (Fnd) w/ 2" Witness Pipe
Thunder Developments, LLC
Parcel #: 130-4F108-8C
50' Building Line
N77°53'34"E
50.00'
5/8" Iron Pin (Set)
N88°46'57"E
34.59'
1" Threaded Iron Pipe (Fnd) w/ Witness T-Post
5/8" Iron Pin (Fnd) w/ 2" Witness Pipe
S12°06'26"E
10.58'
Parcel #: 130-4F108-8
Deed Book 907, Page 549
30.711 Acres (1337767 ft²) – Per Survey
Axle (Fnd)
50' Building Line
S1°56'01"W
Extra Space Cranberry PA, LLC
Parcel #: 130-4F108-9JA
Existing Utility Easement See Dwg. 32D-42b
1" Threaded Iron Pipe (Fnd)
1/2" Iron Pin in Concrete (Fnd)
Axle (Fnd)
15' Building Line
5/8" Iron Pin (Fnd)
New York State Natural Gas Corporation D.B. Vol 606 Pg. 214 50' Right-of-Way
20' Building Line
LOT LINE TO BE REMOVED
50' Building Line
50' Building Line
Creekside Commons, LLC
Parcel #: 130-4F108-9J
PERRY HIGHWAY - ROUTE 19
120' Right-of-Way
CBP 110, LP
Parcel #: 130-4F108-13KA
N1°00'09"W
15' Building Line
15' Building Line
500.41'
657.46'
S88°52'33"W
1214.43'
S88°59'46"W
1/2" Iron Pin (Fnd)
5/8" Iron Pin (Fnd) "Survey Tech" w/ 1" Witness Pin
5/8" Iron Pin (Fnd) & PK in Concrete
5/8" Iron Pin (Fnd)
5/8" Iron Pin (Fnd) "Survey Tech"
5/8" Iron Pin (Fnd) "Survey Tech"
5/8" Iron Pin (Fnd)
5/8" Iron Pin (Fnd)
3/4" Iron Pipe (Fnd)
Pittsburgh Rea Estate, LLC
Parcel #: 130-S7-J1A
GPX, Inc.
Parcel #: 130-S7-J1
Progress Avenue Associates, LLC
Parcel #: 130-S7-J1E
Parcel #: 130-S7-J1EA
Pennsylvania Power Company
Parcel #: 130-S7-J6
Bart Park, LLC
Parcel #: 130-S7-J7
CNC, LLC
Parcel #: 130-S7-J14
5/8" Iron Pin (Fnd)

THIS SHEET NOT VALID WITHOUT SHEET 1 AND 2

HRG

HERBERT, ROWLAND & GRUBIC, INC.
220 WEST KENSINGER DRIVE
SUITE 100
CRANBERRY TOWNSHIP, PA 16066
724.779.4777 | hrg-inc.com

PROFESSIONAL SEAL:

PLAN BOOK	PAGE
434	24

LOT CONSOLIDATION PLAN
FOR
CRANBERRY TOWNSHIP

CRANBERRY TOWNSHIP
152 MANOR RD
CRANBERRY TWP, PENNSYLVANIA 16066

CRANBERRY TOWNSHIP - BUTLER COUNTY - PENNSYLVANIA

REVISIONS

NO.	DATE	DESCRIPTION
1		
2		
3		
4		
5		
6		
7		
8		

80' 40' 0' 80'
SCALE IN FEET

HRG PROJECT NUMBER:	1261.0555
PLAN DATE:	APRIL 7, 2025
DRAWING SCALE:	1" = 80'
PROJ. MANAGER:	A. HATTEN

SHEET TITLE:
COMMUNITY PARK NORTH

SHEET:
3 OF 3

FILE PATH & NAME: P:\0012\001261_0555\C3D\Plan Sets\S1261055LC.dwg LAYOUT:LC SC80 PG 3 OF 3 LAST PLOTTED:4/7/2025 4:21 PM BY:PSAMPLE

Instr: 202511140018967
Pgs: 7 F: $285.00 11/14/2025 10:41 AM
Michele Mustello T20250015889
Butler County Recorder PA

PRELIMINARY/FINAL LAND DEVELOPMENT PLAN

FOR

COMMUNITY PARK NORTH IMPROVEMENTS

CRANBERRY TOWNSHIP, BUTLER COUNTY, PENNSYLVANIA

APRIL 8, 2025

OWNERS CERTIFICATION

BE RESOLUTIONS APPROVED ON THE 27th DAY OF August, 2025, CRANBERRY TOWNSHIP, OWNER OF THE LAND SHOWN ON THE PLAN, ADOPTED THIS PLAN AS ITS LAND DEVELOPMENT. THIS ADOPTION AND DEDICATION SHALL BE BINDING UPON ITS EXECUTORS, AND ASSIGNS.

Nancy A. Auer
SIGNATURE OF WITNESS

SIGNATURE OF OWNER(S)
(Representative–Cranberry Twp)

8/27/25
DATE

ACKNOWLEDGEMENT OF NOTARY PUBLIC

BEFORE ME, THE UNDERSIGNED NOTARY PUBLIC IN AND FOR THE COMMONWEALTH OF PENNSYLVANIA AND COUNTY OF BUTLER, PERSONALLY APPEARED THE ABOVE NAMED Bruce W. Hezlep, AND ACKNOWLEDGE THE FOREGOING ADOPTION AND DEDICATION TO BE THE ACT OF THE OWNER.

WITNESS MY HAND AND NOTARIAL SEAL THIS 27th DAY OF August, 2025

Commonwealth of Pennsylvania - Notary Seal
Nancy A. Auer, Notary Public
Butler County
My commission expires February 5, 2029
Commission number 1004451
Member, Pennsylvania Association of Notaries

Nancy A. Auer
NOTARY PUBLIC

(SEAL)

CERTIFICATION OF TITLE

(I/WE) HEREBY CERTIFY THAT THE TITLE OF THE PROPERTY CONTAINED IN THE COMMUNITY PARK IS IN THE NAME OF CRANBERRY TOWNSHIP, AND IS RECORDED IN DEED BOOK VOLUME _____, PAGE _____. (I/WE) FURTHER CERTIFY THAT THERE IS NO MORTGAGE, LIEN, OR OTHER ENCUMBRANCE AGAINST THIS PROPERTY.

Nancy A. Auer
WITNESS

OWNER(S)

SURVEYOR'S CERTIFICATION

I CERTIFY THAT, TO THE BEST OF MY KNOWLEDGE, THE SURVEY AND PLAN SHOWN HEREON ARE CORRECT AND ACCURATE TO THE STANDARDS REQUIRED.

8-11-2025
DATE

Paul L Sample
NAME OF SURVEYOR

PAUL LAWRENCE SAMPLE
LAND SURVEYOR
SU075659

SU075659
REGISTRATION NUMBER

(SEAL)

MUNICIPAL DECLARATION

THE TOWNSHIP OF CRANBERRY AGREES NOT TO ISSUE BUILDING PERMITS UNTIL THE "PLANNING MODULE FOR LAND DEVELOPMENT" HAS BEEN APPROVED IN ACCORDANCE WITH THE REGULATIONS OF THE PENNSYLVANIA DEPARTMENT OF ENVIRONMENTAL PROTECTION.

8/7/25
DATE

SECRETARY

TOWNSHIP BOARD OF SUPERVISORS CERTIFICATION

APPROVED BY THE BOARD OF SUPERVISORS OF THE TOWNSHIP OF CRANBERRY BY ~~ORDINANCE~~/RESOLUTION No. 2025-40 ON THE 27th DAY OF August, 2025.

SECRETARY

CHAIRMAN, BOARD OF SUPERVISORS

(SEAL)

TOWNSHIP MANAGER CERTIFICATION

I, Daniel D. Santoro TOWNSHIP MANAGER FOR THE TOWNSHIP OF CRANBERRY, CERTIFY THAT THE CONDITIONS FOR FINAL APPROVAL OUTLINED IN ~~ORDINANCE~~/RESOLUATION NO. 2025-40 HAVE BEEN MET IS ACCORDANCE WITH SECTION 22-305 AND 22-307 OF TOWNSHIP OF CRANBERRY CODE OF ORDINANCES.

TOWNSHIP MANAGER

TOWNSHIP ENGINEER CERTIFICATION

I, Michael Malak, TOWNSHIP ENGINEER, A REGISTERED PROFESSIONAL ENGINEER OF THE COMMONWEALTH OF PENNSYLVANIA, DO HEREBY CERTIFY THAT, TO THE BEST OF MY KNOWLEDGE, THAT THE PLAN SHOWN AND DESCRIBED HEREON IS TRUE AND CORRECT.

9/25, 2025
DATE

SIGNATURE

MICHAEL C MALAK
ENGINEER
PE-073220

COUNTY PLANNING COMMISSION CERTIFICATION

REVIEWED BY THE BUTLER COUNTY PLANNING COMMISSION ON THIS 16th DAY OF April, 2025.

R. Henshaw MKG
SECRETARY

J. Hines MKG
CHAIRMAN, BUTLER COUNTY PANNING COMMISSION

PLAN # 25082

PROOF OF RECORDING

RECORDED IN THE OFFICE OF THE RECORDER OF DEEDS OF THE COUNTY OF BUTLER, COMMONWEALTH OF PENNSYLVANIA, IN PLAN BOOK VOLUME 434, PAGE(S) 25-31

GIVEN UNDER MY HAND AND SEAL THIS 14th DAY OF November 2025.

(SEAL)

Michele M. Mustello
RECORDER OF DEEDS

MICHELE M. MUSTELLO
RECORDER OF DEEDS
My Commission Expires First Monday In January 2028

PLAN ACCURACY CERTIFICATION

I, Anna T. Hatten, A REGISTERED LANDSCAPE ARCHITECT OF THE COMMONWEALTH OF PENNSYLVANIA, DO HEREBY CERTIFY THAT, TO THE BEST OF MY KNOWLEDGE, THAT THE PLAN SHOWN AND DESCRIBED HEREON IS TRUE AND CORRECT.

08 / 11, 20 25
DATE

SIGNATURE

Sheet List Table

Sheet Number	Sheet Title
01	COVER SHEET
02	GENERAL NOTES
03	EXISTING CONDITIONS PLAN
04	DEMOLITION PLAN
05	OVERALL SITE LAYOUT PLAN
06	SITE LAYOUT PLAN
07	SITE LAYOUT PLAN
08	OVERALL SITE GRADING PLAN
09	SITE GRADING PLAN
10	SITE GRADING PLAN
11	OVERALL SITE UTILITY PLAN
12	SITE UTILITY PLAN
13	SITE UTILITY PLAN
14	STORM PROFILE
15	STORM PROFILE
16	SANITARY & WATER PROFILE
17	OVERALL SITE LANDSCAPE PLAN
18	SITE LANDSCAPE PLAN
19	SITE LANDSCAPE PLAN
20	SITE DETAILS
21	SITE DETAILS
22	SITE DETAILS
23	INITIAL PHASE EROSION & SEDIMENT CONTROL PLAN
24	PHASE 1 OVERALL EROSION & SEDIMENT CONTROL PLAN
25	PHASE 1 EROSION & SEDIMENT CONTROL PLAN
26	PHASE 1 EROSION & SEDIMENT CONTROL PLAN
27	PHASE 2 OVERALL EROSION & SEDIMENT CONTROL PLAN
28	PHASE 2 EROSION & SEDIMENT CONTROL PLAN
29	PHASE 2 EROSION & SEDIMENT CONTROL PLAN
30	PHASE 3 OVERALL EROSION & SEDIMENT CONTROL PLAN
31	PHASE 3 EROSION & SEDIMENT CONTROL PLAN
32	PHASE 3 EROSION & SEDIMENT CONTROL PLAN
33	EROSION & SEDIMENT CONTROL NOTES
34	EROSION & SEDIMENT CONTROL NOTES
35	EROSION & SEDIMENT CONTROL DETAILS
36	EROSION & SEDIMENT CONTROL DETAILS
37	EROSION & SEDIMENT CONTROL DETAILS
38	EROSION & SEDIMENT CONTROL DETAILS
39	EROSION & SEDIMENT CONTROL DETAILS
40	OVERALL PCSM PLAN
41	PCSM PLAN
42	PCSM PLAN
43	PCSM NOTES
44	PCSM DETAILS
45	PCSM DETAILS
46	PCSM DETAILS

SUPPLEMENTAL PLANS

ELECTRICAL PLANS, SHEETS E1-E8, PREPARED BY REDCON ENGINEERING
ARCHITECTURE PLANS PREPARED BY KATR ARCHITECTURE

PLAN BOOK	PAGE
434	25

PA ONE CALL

ACT 287, AS AMENDED

PENNSYLVANIA ONE CALL SYSTEM, INC.
1-800-242-1776
STOP-CALL BEFORE YOU DIG!

PENNSYLVANIA ACT 287 (1974) AS AMENDED, REQUIRES NOTIFICATION BY EXCAVATORS, DESIGNERS, OR ANY PERSON PREPARING TO DISTURB THE EARTH'S SURFACE ANYWHERE IN THE COMMONWEALTH.
PA ONE-CALL SERIAL NO. 20182123855 HAS BEEN ASSIGNED TO THIS PROJECT ON 07-31-18.

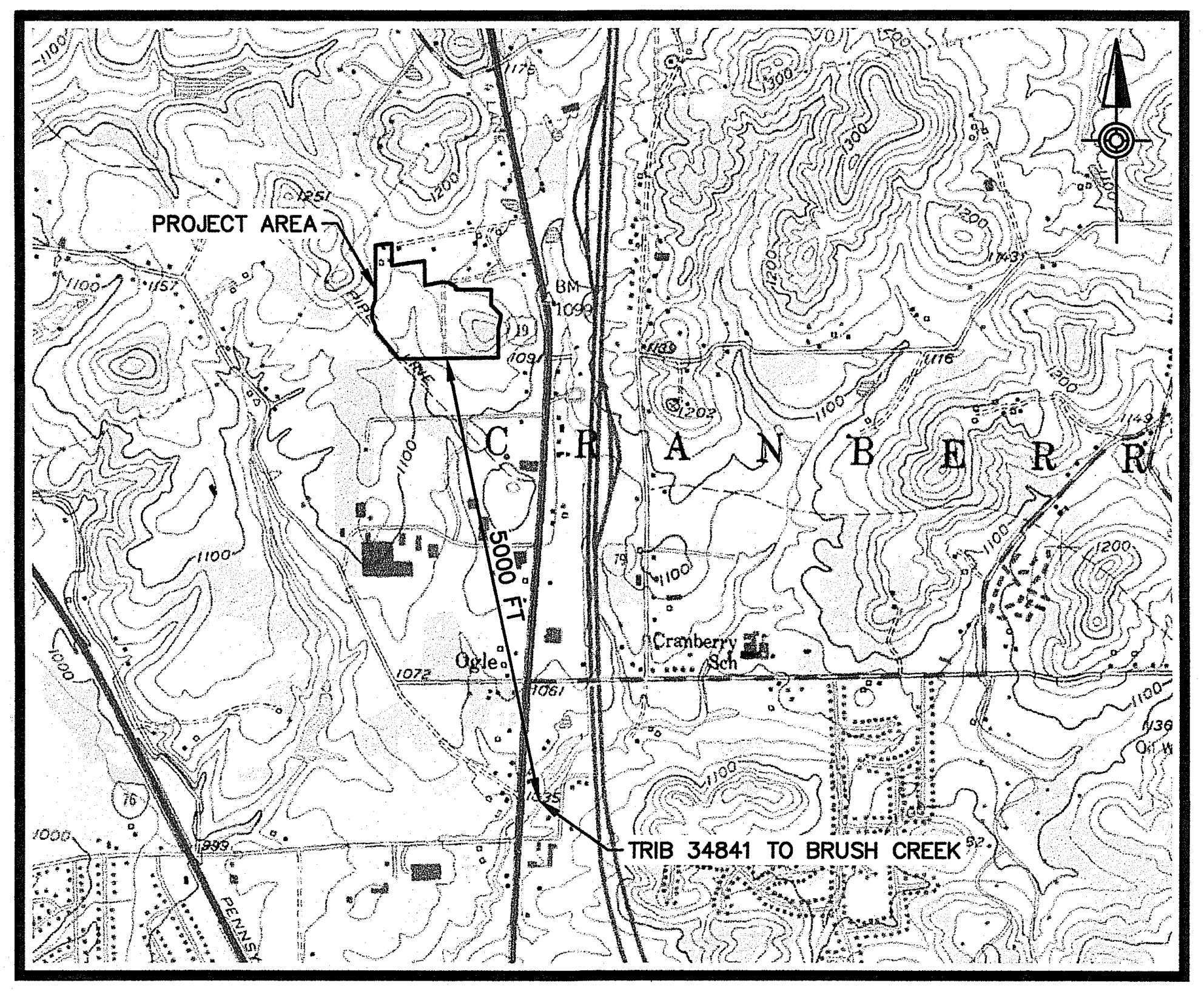

LOCATION MAP

SCALE: 1"=2000'

SITE ENGINEER

HERBERT, ROWLAND & GRUBIC, INC.
220 WEST KENSINGER DRIVE, SUITE 100
CRANBERRY TOWNSHIP, PA 16066
CONTACT: ANNA T. HATTEN, RLA
PHONE: (724) 779-4777
FAX: (724) 779-4711
EMAIL: ahatten@hrg-inc.com

SURVEYOR

HERBERT, ROWLAND & GRUBIC, INC.
220 WEST KENSINGER DRIVE, SUITE 100
CRANBERRY TOWNSHIP, PA 16066
CONTACT: PAUL L. SAMPLE, PLS
PHONE: (724) 779-4777
FAX: (724) 779-4711
EMAIL: psample@hrg-inc.com

PROJECT DATA

NPDES BOUNDARY:	23.5 AC
LIMIT OF DISTURBANCE:	19.0 AC
RECEIVING STREAM:	TRIB 34841 TO BRUSH CREEK (WWF)

APPLICANT

CRANBERRY TOWNSHIP
2525 ROCHESTER ROAD
CRANBERRY TOWNSHIP, PA 16066
PHONE: (724) 766-4806

SITE/PROPERTY ADDRESS

COMMUNITY PARK NORTH ROAD
CRANBERRY TOWNSHIP, PA 16066

HRG
HERBERT, ROWLAND & GRUBIC, INC.
220 WEST KENSINGER DRIVE
SUITE 100
CRANBERRY TOWNSHIP, PA 16066
724.779.4777 | hrg-inc.com

PRELIMINARY / FINAL LAND DEVELOPMENT PLAN
FOR
COMMUNITY PARK NORTH IMPROVEMENTS
CRANBERRY TOWNSHIP
2525 ROCHESTER ROAD
CRANBERRY TOWNSHIP, PENNSYLVANIA 16066
CRANBERRY TOWNSHIP BUTLER COUNTY PENNSYLVANIA

PROFESSIONAL SEAL:

ANNA TERESA HATTEN
REGISTRATION NUMBER LA003003

HRG PROJECT NUMBER:	R001261.0555
PLAN DATE:	APRIL 8, 2025
DRAWING SCALE:	AS SHOWN
PROJ. MANAGER:	ATH

REVISIONS

NO.	DATE	DESCRIPTION
1	5/30/2025	REVISIONS PER TOWNSHIP REVIEW
2		
3		
4		
5		
6		
7		
8		
9		

SHEET TITLE:
COVER SHEET

SHEET: CV-01 01

FILE PATH & NAME: P:\0012\001261_0555\C3D\Plan Sets\L001261055CV.dwg LAYOUT: LD_CV-1 LAST PLOTTED: 5/30/2025 1:09 PM BY: JTAI

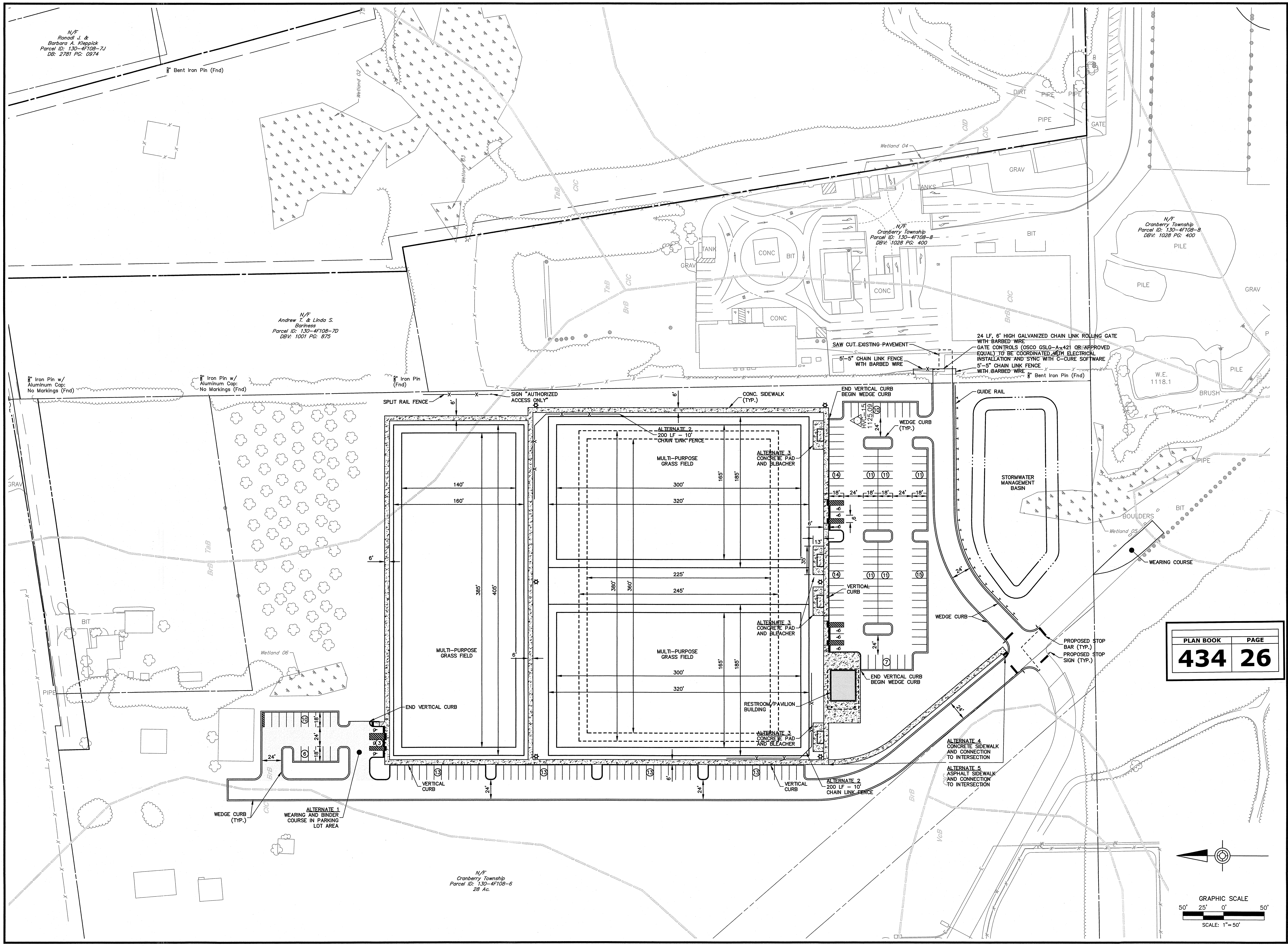
N/F
Ronald J. & Barbara A. Kleppick
Parcel ID: 130-4F108-7J
DB: 2781 PG: 0974
5/8" Bent Iron Pin (Fnd)
Wetland 02
Wetland 03
Wetland 04
Wetland 05
Wetland 06
N/F
Andrew T. & Linda S. Bariness
Parcel ID: 130-4F108-7D
DBV: 1001 PG: 875
N/F
Cranberry Township
Parcel ID: 130-4F108-8
DBV: 1028 PG: 400
TANK
TANKS
CONC
BIT
GRAV
DIRT
PIPE
GATE
PILE
BRUSH
BOULDERS
W.E. 1118.1
TaB
CIC
BrB
VcB
5/8" Iron Pin w/ Aluminum Cap: No Markings (Fnd)
5/8" Iron Pin (Fnd)
SAW CUT EXISTING PAVEMENT
5'-5" CHAIN LINK FENCE WITH BARBED WIRE
24 LF, 6' HIGH GALVANIZED CHAIN LINK ROLLING GATE WITH BARBED WIRE
GATE CONTROLS (OSCO GSLG-A-421 OR APPROVED EQUAL) TO BE COORDINATED WITH ELECTRICAL INSTALLATION AND SYNC WITH C-CURE SOFTWARE
5'-5" CHAIN LINK FENCE WITH BARBED WIRE
5/8" Bent Iron Pin (Fnd)
SPLIT RAIL FENCE
SIGN "AUTHORIZED ACCESS ONLY"
CONC. SIDEWALK (TYP.)
END VERTICAL CURB BEGIN WEDGE CURB
GUIDE RAIL
ALTERNATE 2
200 LF - 10' CHAIN LINK FENCE
ALTERNATE 3
CONCRETE PAD AND BLEACHER
MULTI-PURPOSE GRASS FIELD
HVC-15 1125.09
WEDGE CURB (TYP.)
STORMWATER MANAGEMENT BASIN
140'
160'
300'
320'
165'
185'
385'
405'
225'
245'
380'
360'
35'
6'
13'
18'
24'
10
14
11
15
7
13
6
3
VERTICAL CURB
WEDGE CURB
WEARING COURSE
PROPOSED STOP BAR (TYP.)
PROPOSED STOP SIGN (TYP.)
END VERTICAL CURB BEGIN WEDGE CURB
RESTROOM/PAVILION BUILDING
END VERTICAL CURB
ALTERNATE 4
CONCRETE SIDEWALK AND CONNECTION TO INTERSECTION
ALTERNATE 5
ASPHALT SIDEWALK AND CONNECTION TO INTERSECTION
WEDGE CURB (TYP.)
ALTERNATE 1
WEARING AND BINDER COURSE IN PARKING LOT AREA
N/F
Cranberry Township
Parcel ID: 130-4F108-6
28 Ac.
GRAPHIC SCALE
50' 25' 0' 50'
SCALE: 1"=50'

PLAN BOOK	PAGE
434	26

HRG

HERBERT, ROWLAND & GRUBIC, INC.
220 WEST KENSINGER DRIVE
SUITE 100
CRANBERRY TOWNSHIP, PA 16066
724.779.4777 | hrg-inc.com

PRELIMINARY / FINAL LAND DEVELOPMENT PLAN
FOR
COMMUNITY PARK NORTH IMPROVEMENTS

CRANBERRY TOWNSHIP
2525 ROCHESTER ROAD
CRANBERRY TOWNSHIP, PENNSYLVANIA 16066

CRANBERRY TOWNSHIP BUTLER COUNTY PENNSYLVANIA

PROFESSIONAL SEAL:

REGISTRATION NUMBER LA003003

HRG PROJECT NUMBER:	R001261.0555
PLAN DATE:	APRIL 8, 2025
DRAWING SCALE:	AS SHOWN
PROJ. MANAGER:	ATH

REVISIONS

NO.	DATE	DESCRIPTION
1	5/30/2025	REVISIONS PER TOWNSHIP REVIEW
2	6/05/2025	REVISIONS PER REVISED ARCHITECTURE
3	6/23/2025	REVISED PER RFI
4	7/08/2025	REVISIONS PER TOWNSHIP REVIEW
5		
6		
7		
8		
9		

SHEET TITLE:
OVERALL SITE LAYOUT PLAN

SHEET: **OVSI-1** **05**

FILE PATH & NAME: P:\0012\001261_0555\C3D\Plan Sets\L001261055SSI.dwg LAYOUT: LD_OVSI-1 LAST PLOTTED: 8/11/2025 10:46 AM BY: JTAI

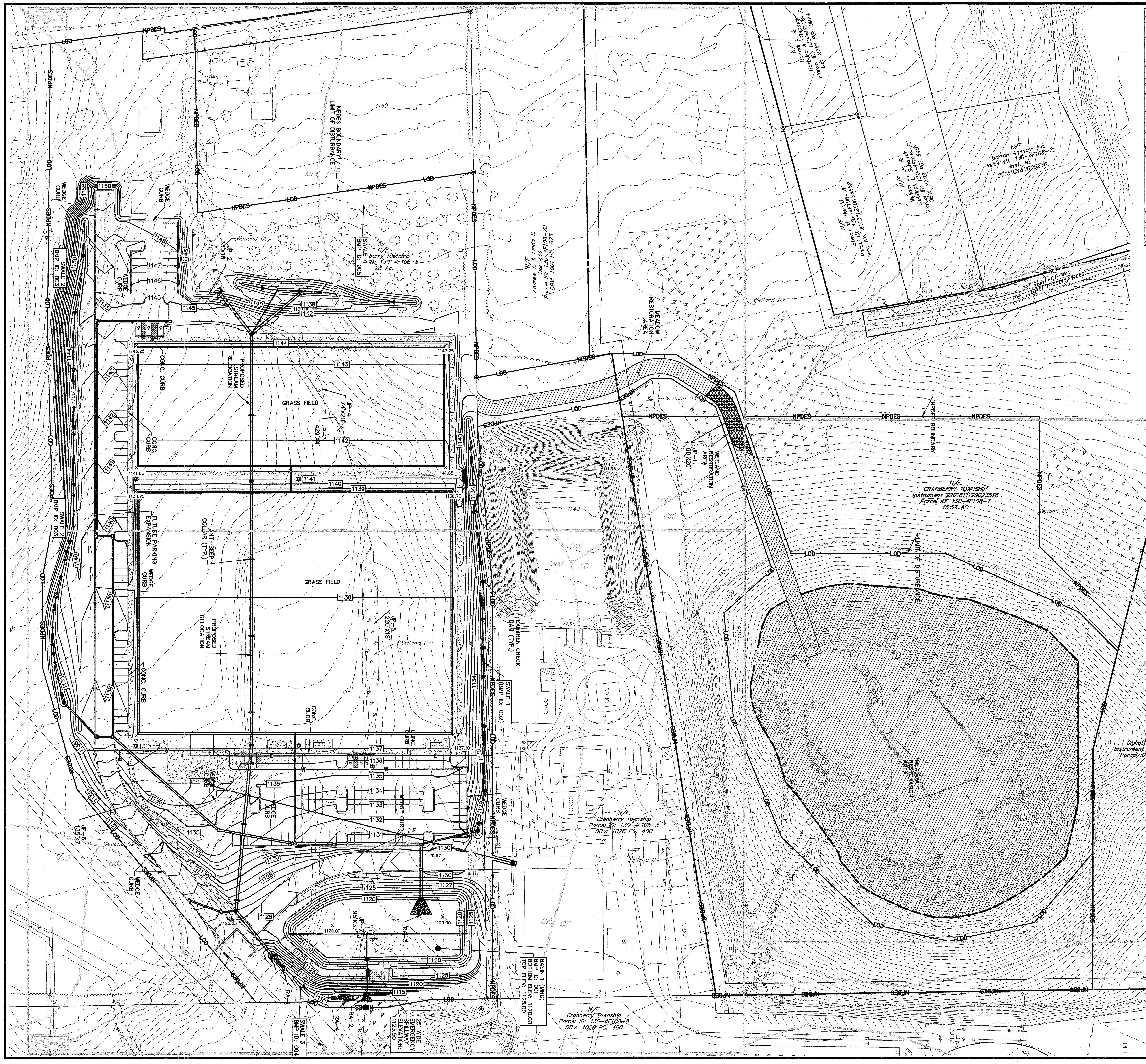
PC-1
PC-2
PC-3
NPDES
LOD
NPDES BOUNDARY / LIMIT OF DISTURBANCE
GRASS FIELD
PROPOSED STREAM RELOCATION
FUTURE PARKING EXPANSION
ANTI-SEEP COLLAR (TYP.)
CONC. CURB
WEDGE CURB
EARTHEN CHECK DAM (TYP.)
SWALE 1 (BMP ID: 002)
SWALE 2 BMP ID: 003
SWALE 3 BMP ID: 004
SWALE 4 BMP ID: 005
BASIN 1 (MRC) BMP ID: 001 BOTTOM ELEV. 1120.00 TOP ELEV. 1125.00
25' WIDE EMERGENCY SPILLWAY ELEVATION 1123.50
MEADOW RESTORATION AREA
WETLAND RESTORATION AREA
N/F Cranberry Township Instrument #201811190023526 Parcel ID: 130-4F108-7 15.53 AC
N/F Gigliotti Holdings, L.P. Instrument #201811190023528 Parcel ID: 130-4F108-7U 7.31 AC
N/F Cranberry Township Parcel ID: 130-4F108-8 DBV: 1028 PG: 400
N/F Barron Agency, Inc. Parcel ID: 130-4F108-7L Inst. No. 201503180005236
N/F Andrew S. & Linda S. Bariess Parcel ID: 130-4F108-7D
33' Right-of-Way Per Subject Property Deed
JP-1 90"X20"
JP-2 33"X18"
JP-4 74"X20"
JP-5 220"X18"
JP-6 15"X7"
JP-7 95"X37"
RA-2
RA-3
RA-4
Wetland 01
Wetland 02
Wetland 03
Wetland 04
Wetland 06
Wetland 07
Wetland 08
Wetland 09
CONC
BIT
GRAV
PILE

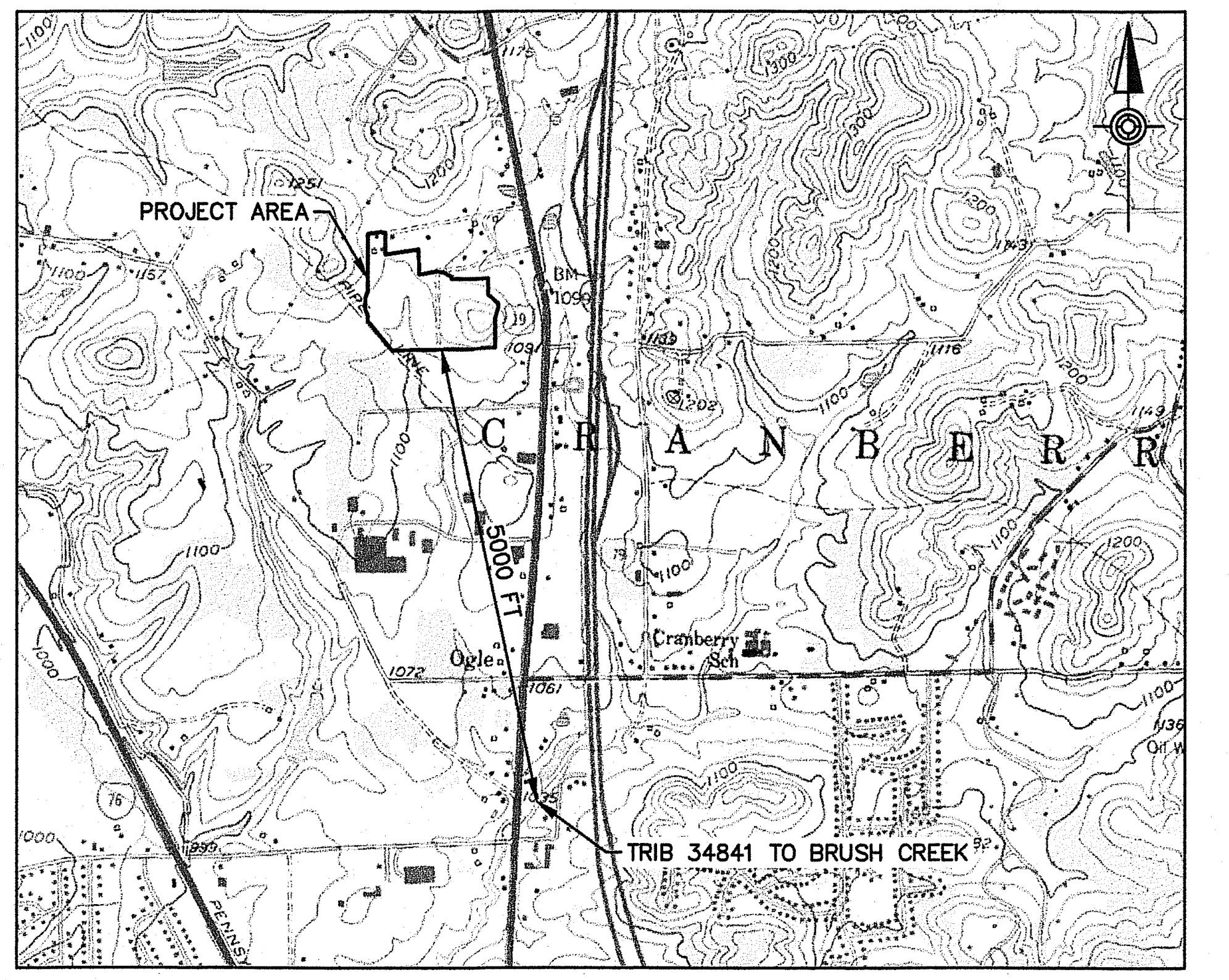
PROJECT AREA
CRANBERRY
TRIB 34841 TO BRUSH CREEK

LOCATION MAP

SCALE: 1"=2000'

STORMWATER DEVELOPMENT LEGEND

1010	PROPOSED CONTOUR
x 410.00	PROPOSED SPOT ELEVATION
▶	PROPOSED DITCH OR SWALE
▭	PROPOSED STORM SEWER & INLET
CeA / ErB	*Soil Boundaries*
▨	MEADOW RESTORATION AREA TO BE SEEDED WITH ERNST–181 SEED MIX
▩	WETLAND RESTORATION AREA TO BE SEEDED WITH ERNMX–178 SEED MIX

NPDES BOUNDARY:	23.5 AC
LIMIT OF DISTURBANCE:	19.0 AC
RECEIVING STREAM:	TRIB 34841 TO BRUSH CREEK (WWF)

OWNER STORMWATER CERTIFICATION

AS THE OWNER, I Bruce W. Hezlep, ACKNOWLEDGE THAT THE STORMWATER BMPS ARE FIXTURES THAT CANNOT BE ALTERED OR REMOVED WITHOUT PRIOR APPROVAL BY THE TOWNSHIP AND THAT THE OPERATIONS AND MAINTENANCE (O&M) AGREEMENT IS PART OF THE POST CONSTRUCTION STORMWATER PLAN.

Bruce W. Hez
SIGNATURE

10/7/25
DATE

TOWNSHIP ENGINEER STORMWATER CERTIFICATION

I, Tim Schutzman, HAVE REVIEWED THIS STORMWATER MANAGEMENT PLAN IN ACCORDANCE WITH THE DESIGN STANDARDS AND CRITERIA OF THE CRANBERRY TOWNSHIP STORMWATER MANAGEMENT ORDINANCE.

Tim Schutzman
SIGNATURE

10/7/2025
DATE

PROFESSIONAL ENGINEER STORMWATER CERTIFICATION

I, Jason Tai, P.E., HEREBY CERTIFY THAT THE STORMWATER MANAGEMENT PLAN MEETS ALL DESIGN STANDARDS AND CRITERIA OF THE CRANBERRY TOWNSHIP STORMWATER MANAGEMENT ORDINANCE.

Tai
SIGNATURE

07/09/25
DATE

JASON TAI
PE086349

PLAN BOOK	PAGE
434	27

GRAPHIC SCALE
60' 30' 0' 60'
SCALE: 1"=60'

HERBERT, ROWLAND & GRUBIC, INC.
220 WEST KENSINGER DRIVE
SUITE 100
CRANBERRY TOWNSHIP, PA 16066
724.779.4777 | hrg-inc.com

POST CONSTRUCTION STORMWATER MANAGEMENT PLAN
FOR
COMMUNITY PARK NORTH IMPROVEMENTS

CRANBERRY TOWNSHIP
2525 ROCHESTER ROAD
CRANBERRY TOWNSHIP, PENNSYLVANIA 16066

CRANBERRY TOWNSHIP BUTLER COUNTY PENNSYLVANIA

PROFESSIONAL SEAL:

ANNA TERESA HATTEN
REGISTRATION NUMBER LA003003

HRG PROJECT NUMBER:	R001261.0555
PLAN DATE:	JUNE 2024
DRAWING SCALE:	AS SHOWN
PROJ. MANAGER:	ATH

REVISIONS

NO.	DATE	DESCRIPTION
1	08.30.2024	REVISED PER BCCD COMMENTS.
2	12.20.2024	REVISED PER PADEP COMMENTS.
3	03.14.2025	REVISED PER BCCD COMMENTS.
4		
5		
6		
7		
8		
9		

SHEET TITLE:
OVERALL PCSM PLAN

SHEET: OVPC 03

FILE PATH & NAME: P:\0012\001261_0555\C3D\Plan Sets\L001261055SPC.dwg LAYOUT:NPDES_OVPC-1 LAST PLOTTED: 7/9/2025 1:40 PM BY: JTAI

PURPOSE OF PLAN

THE POST CONSTRUCTION STORMWATER MANAGEMENT PLAN HAS BEEN DEVELOPED WITHIN ESTABLISHED GUIDELINES AND STANDARDS TO PREVENT AN INCREASE IN THE RATE OF STORMWATER RUNOFF. THE PLAN WAS DEVELOPED TO MAXIMIZE THE PROTECTION OF EXISTING DRAINAGE FEATURES AND VEGETATION WHILE PRESERVING THE INTEGRITY OF STREAM CHANNELS AND PROTECT THE PHYSICAL, BIOLOGICAL, AND CHEMICAL QUALITIES OF THE RECEIVING STREAM. THE PLAN ALSO MINIMIZES THE INCREASE IN STORMWATER RUNOFF VOLUME, BY MINIMIZING LAND CLEARING, GRADING, SOIL COMPACTION AND IMPERVIOUS AREAS WHILE UTILIZING STRUCTURAL OR NONSTRUCTURAL BMP'S THAT PREVENT OR MINIMIZE CHANGES IN STORMWATER RUNOFF.

CRITICAL STAGES OF CONSTRUCTION

LISTED BELOW ARE THE CRITICAL STAGES OF IMPLEMENTATION OF THE PCSM PLAN FOR WHICH A LICENSED PROFESSIONAL OR DESIGNEE WILL BE PRESENT ON SITE TO OBSERVE CONSTRUCTION OR CERTIFY CONSTRUCTION:

THE INSTALLATION OF:

ABOVE GROUND DETENTION BASIN (MRC):

- OUTLET STRUCTURE AND OUTLET BARREL WITH ANTI-SEEP COLLARS
- BASIN BERMS
- UNDERDRAINS AND SOIL MEDIA

VEGETATED SWALE:

- EARTHEN CHECK DAMS

RECYCLING AND DISPOSAL OF WASTES

ANTICIPATED WASTES:

- LITTER
- GRASS CLIPPINGS
- TRASH
- DEBRIS

ANY TRASH, DEBRIS, LITTER, OR LAWN CLIPPINGS COLLECTED DURING ROUTINE MAINTENANCE OF THE SITE MUST BE DISPOSED OF IN A REGULATED FACILITY.

NOTICE OF TERMINATION

UPON PERMANENT STABILIZATION OF THE EARTH DISTURBANCE ACTIVITY UNDER § 102.22(A)(2) (RELATING TO PERMANENT STABILIZATION), AND INSTALLATION OF BMPS IN ACCORDANCE WITH AN APPROVED PLAN PREPARED AND IMPLEMENTED IN ACCORDANCE WITH § 102.4 AND § 102.8 (RELATING TO EROSION AND SEDIMENT CONTROL REQUIREMENTS; AND PCSM REQUIREMENTS), THE PERMITTEE OR CO-PERMITTEE SHALL SUBMIT A NOTICE OF TERMINATION TO THE DEPARTMENT OR CONSERVATION DISTRICT. THE NOTICE OF TERMINATION MUST INCLUDE THE FACILITY NAME, ADDRESS AND LOCATION; THE OPERATOR NAME AND ADDRESS; THE PERMIT NUMBER; THE REASON FOR PERMIT TERMINATION; IDENTIFICATION OF THE PERSONS WHO HAVE AGREED TO AND WILL BE RESPONSIBLE FOR LONG-TERM OPERATION AND MAINTENANCE OF THE PCSM BMPS IN ACCORDANCE WITH § 102.8(M) AND PROOF OF COMPLIANCE WITH § 102.8(M)(2). UNTIL THE PERMITTEE OR CO-PERMITTEE HAS RECEIVED WRITTEN APPROVAL OF A NOTICE OF TERMINATION, THE PERMITTEE OR CO-PERMITTEE WILL REMAIN RESPONSIBLE FOR COMPLIANCE WITH THE PERMIT TERMS AND CONDITIONS INCLUDING LONG-TERM OPERATION AND MAINTENANCE OF ALL PCSM BMPS ON THE PROJECT SITE AND IS RESPONSIBLE FOR VIOLATIONS OCCURRING ON THE PROJECT SITE. THE DEPARTMENT OR CONSERVATION DISTRICT WILL CONDUCT A FINAL INSPECTION AND APPROVE OR DENY THE NOTICE OF TERMINATION WITHIN 30 DAYS.

POST-CONSTRUCTION BEST MANAGEMENT PRACTICES OWNERSHIP, OPERATIONS AND MAINTENANCE PROCEDURES

THE MAINTENANCE OF THE BMPS SHALL BE OWNED, MAINTAINED AND/OR REPAIRED BY THE RESPECTIVE PROPERTY OWNER IDENTIFIED BELOW. OWNERSHIP, OPERATION AND MAINTENANCE RESPONSIBILITY WILL BE OF THE RESPECTIVE PROPERTY OWNER. THESE RESPONSIBILITIES INCLUDE OPERATION AND MAINTENANCE OF BMPS, STORM SEWERS AND DRAINAGE STRUCTURES.

GENERAL MAINTENANCE

1. ALL STORMWATER MANAGEMENT FACILITIES SHOWN ON THIS PLAN SHALL BE CONSTRUCTED BY THE DEVELOPER IN ACCORDANCE WITH THE DESIGN, CONDITIONS, AND SPECIFICATIONS IDENTIFIED ON THE PLANS. OWNERSHIP AND MAINTENANCE SHALL BE THE RESPONSIBILITY OF THE LANDOWNER, HIS SUCCESSORS AND ASSIGNS, UNLESS SPECIFICALLY IDENTIFIED HEREIN.
2. STORMWATER MANAGEMENT FACILITIES SHALL BE MAINTAINED IN GOOD WORKING CONDITION SO THAT THEY ARE PERFORMING THEIR DESIGN FUNCTION, IN A MANNER ACCEPTABLE TO THE TOWNSHIP AND THE COUNTY CONSERVATION DISTRICT. MAINTENANCE SHALL INCLUDE PERFORMING ROUTINE MAINTENANCE AND REPAIR OR REPLACEMENT OF DAMAGED FACILITIES, VEGETATION OR STORMWATER AREAS TO CONDITIONS AS SHOWN ON THE APPROVED PLAN. THE TOWNSHIP AND COUNTY CONSERVATION DISTRICT MUST BE NOTIFIED PRIOR TO PERFORMING REPAIRS.
3. INSPECT STORMWATER CONVEYANCE FACILITIES (INLETS, STORM SEWERS AND OUTLET PROTECTION) BI-ANNUALLY OR AFTER EACH SIGNIFICANT RAINFALL-PRODUCING EVENT. CLEAR DEBRIS FROM INLETS TO ALLOW UN-IMPEDED FLOW, FLUSH STORM SEWERS IF THEY BECOME PLUGGED AND CLEAN AND REPAIR SWALES SHOULD THEY BECOME BLOCKED OR ERODED.
4. ALL WASTES, CLIPPINGS, AND DEBRIS SHALL BE REMOVED FROM THE SITE AND RECYCLED OR DISPOSED OF IN ACCORDANCE WITH THE DEPARTMENT'S SOLID WASTE MANAGEMENT REGULATIONS AT 25 PA. CODE 260.1 ET SEQ., 271.1, AND 287.1 ET. SEQ. NO DEBRIS SHALL BE BURNED, BURIED, DUMPED, OR DISCHARGED AT THE SITE.

SPECIFIC MAINTENANCE

ABOVE GROUND DETENTION BASIN (MRC)

- INLETS SHOULD BE INSPECTED AND CLEANED AT LEAST TWO TIMES PER YEAR AND AFTER RUNOFF EVENTS
- THE VEGETATION ALONG THE SURFACE OF THE BASIN AND AREAS SHOULD BE MAINTAINED IN GOOD CONDITION, AND ANY BARE SPOTS REVEGETATED AS SOON AS POSSIBLE.
- VEHICLES SHOULD NOT BE PARKED OR DRIVEN ON THE BASIN OR AREAS, AND CARE SHOULD BE TAKEN TO AVOID EXCESSIVE COMPACTION BY MOWERS.
- INSPECT THE BASIN AND AREAS AFTER RUNOFF EVENTS AND MAKE SURE THAT RUNOFF DRAINS DOWN WITHIN 72 HOURS.
- ALSO INSPECT FOR ACCUMULATION OF SEDIMENT, DAMAGE TO OUTLET CONTROL STRUCTURES, EROSION CONTROL MEASURES, SIGNS OF WATER CONTAMINATION/SPILLS, AND SLOPE STABILITY IN THE BERMS.
- REMOVE ACCUMULATED SEDIMENT FROM THE BASIN AND AREAS AS REQUIRED. RESTORE ORIGINAL CROSS SECTION AND INFILTRATION RATE. PROPERLY DISPOSE OF SEDIMENT.

VEGETATED CHANNELS

- MAINTENANCE ACTIVITIES TO BE DONE ANNUALLY AND WITHIN 48 HOURS AFTER EVERY MAJOR STORM EVENT (> 1 INCH RAINFALL DEPTH):
- INSPECT AND CORRECT EROSION PROBLEMS, DAMAGE TO VEGETATION, AND SEDIMENT AND DEBRIS ACCUMULATION (ADDRESS WHEN > 3 INCHES AT ANY SPOT OR COVERING VEGETATION).
- INSPECT VEGETATION ON SIDE SLOPES FOR EROSION AND FORMATION OF RILLS OR GULLIES, CORRECT AS NEEDED.
- INSPECT FOR POOLS OF STANDING WATER; DEWATER AND DISCHARGE TO AN APPROVED LOCATION AND RESTORE TO DESIGN GRADE.
- MOW AND TRIM VEGETATION TO A HEIGHT OF 4 TO 6 INCHES AT LEAST ONCE A MONTH DURING GROWING SEASON TO ENSURE SAFETY, AESTHETICS, PROPER SWALE OPERATION, OR TO SUPPRESS WEEDS AND INVASIVE VEGETATION; PREVENTATIVE METHODS FOR NOXIOUS AND INVASIVE PLANT CONTROL SHALL BE IMPLEMENTED AND IF ANY ARE FOUND DURING INSPECTION THEY SHALL BE REMOVED AS NECESSARY; DISPOSE OF CUTTINGS IN A LOCAL COMPOSTING FACILITY; MOW ONLY WHEN SWALE IS DRY TO AVOID RUTTING.
- REPAIR ERODED AREAS WITHIN CHANNELS IMMEDIATELY TO ENSURE DESIGN DIMENSIONS AND STABILIZATION ARE AVAILABLE AT ALL TIMES.
- ALL CHANNELS MUST BE KEPT FREE OF OBSTRUCTIONS SUCH AS FILL GROUND, FALLEN LEAVES & WOODY DEBRIS, ACCUMULATED SEDIMENT, AND CONSTRUCTION MATERIALS / WASTE. CHANNELS SHOULD BE KEPT MOWED AND/OR FREE OF ALL WEEDS, BRUSH, OR WOODY GROWTH. ANY UNDERGROUND UTILITIES RUNNING ACROSS / THROUGH THE CHANNEL(S) SHALL BE IMMEDIATELY BACKFILLED AND THE CHANNEL(S) REPAIRED AND STABILIZED PER THE CHANNEL CROSS-SECTION DETAIL.
- INSPECT FOR LITTER; REMOVE PRIOR TO MOWING.
- INSPECT FOR UNIFORMITY IN CROSS-SECTION AND LONGITUDINAL SLOPE, CORRECT AS NEEDED.
- INSPECT SWALE INLET (CURB CUTS, PIPES, ETC.) AND OUTLET FOR SIGNS OF EROSION OR BLOCKAGE, CORRECT AS NEEDED.
- MAINTENANCE ACTIVITIES TO BE DONE AS NEEDED:
    - a. PLANT ALTERNATIVE GRASS SPECIES IN THE EVENT OF UNSUCCESSFUL ESTABLISHMENT.
    - b. RESEED BARE AREAS; INSTALL APPROPRIATE EROSION CONTROL MEASURES WHEN NATIVE SOIL IS EXPOSED OR EROSION CHANNELS ARE FORMING.
    - c. ROTOTILL AND REPLANT SWALE IF DRAW DOWN TIME IS MORE THAN 48 HOURS.
    - d. INSPECT AND CORRECT CHECK DAMS WHEN SIGNS OF ALTERED WATER FLOW (CHANNELIZATION, OBSTRUCTIONS, EROSION, ETC.) ARE IDENTIFIED.
    - e. WATER DURING DRY PERIODS, FERTILIZE, AND APPLY PESTICIDE ONLY WHEN ABSOLUTELY NECESSARY.
- MAINTENANCE ACTIVITIES DURING WINTER CONDITIONS:
    - a. INSPECT SWALE IMMEDIATELY AFTER THE SPRING MELT, REMOVE RESIDUALS (E.G. SAND) AND REPLACE DAMAGED VEGETATION WITHOUT DISTURBING REMAINING VEGETATION.
    - b. IF ROADSIDE OR PARKING LOT RUNOFF IS DIRECTED TO THE SWALE, MULCHING AND/OR SOIL AERATION/MANIPULATION MAY BE REQUIRED IN THE SPRING TO RESTORE SOIL STRUCTURE AND MOISTURE CAPACITY AND TO REDUCE THE IMPACTS OF DEICING AGENTS.
    - c. USE NONTOXIC, ORGANIC DEICING AGENTS, APPLIED EITHER AS BLENDED, MAGNESIUM CHLORIDE-BASED LIQUID PRODUCTS OR AS PRETREATED SALT.
    - d. USE SALT-TOLERANT VEGETATION IN SWALES

POTENTIAL THERMAL IMPACTS

THE PROPOSED IMPROVEMENTS WILL INCREASE IMPERVIOUS AREA ON SITE. STORMWATER RUNOFF FROM IMPERVIOUS AREAS WILL BE CONVEYED VIA PIPES AND SHEET FLOW TO AN ABOVE GROUND DETENTION BASIN ON SITE. THE STORMWATER MANAGEMENT BMPS WILL PROMOTE INFILTRATION, AND STORE WATER AND ALLOW TIME TO COOL BEFORE DISCHARGING AT A CONTROLLED RATE TO SURFACE WATERS.

RECEIVING WATER COURSE

STORMWATER FROM THE PROJECT SITE FLOWS INTO THE TRIB 34841 TO BRUSH CREEK, CLASSIFIED AS A WWF.

SEQUENCE FOR INDIVIDUAL BMP INSTALLATION (CRITICAL STAGES)

CONVERSION OF SEDIMENT BASIN 1 TO ABOVE GROUND DETENTION BASIN 1 (MRC):

1. INSTALL AND MAINTAIN PROPER EROSION AND SEDIMENT CONTROL MEASURES DURING CONSTRUCTION.
2. FLUSH UPSTREAM STORMWATER CONVEYANCES. REMOVE AND PROPERLY DISPOSE OF ACCUMULATED SEDIMENT FROM SEDIMENT BASIN.
3. DEWATER BASIN WITH SEDIMENT STORAGE DEWATERING FACILITY.
4. REMOVE FLOW DIVERSION BAFFLE, SKIMMER WITH STONE LANDING BERM, CLEAN-OUT STAKE, AND TEMPORARY RISER EXTENSION.
5. RE-GRADE BASIN BOTTOM TO BOTTOM OF SOIL MEDIA FINAL GRADE AND SCARIFY 12" OF IN-SITU SOILS.
6. REMOVE TEMPORARY BOARDS ON THE PERMANENT OUTLET CONTROL STRUCTURE AND GROUT THE OPENING FOR THE SKIMMER TEMPORARY STUB.
7. INSPECT SPILLWAY & ITS LINER, AND MAKE ALL NECESSARY REPAIR.
8. INSTALL BASIN MRC UNDERDRAINS.
9. INSTALL SOIL MEDIA TO SPECIFIED DEPTH. DO NOT COMPACT IN SITU SOILS OR SOIL MEDIA.
    9.1. SOIL MEDIA SHALL MEET REQUIREMENTS OF PERMEABLE SOIL MEDIA.
10. SEED AND MULCH BASIN WITH SPECIFIED SEEDING AS SHOWN ON PCSM DETAILS.
11. UPON FINAL STABILIZATION (UNIFORM 70% PERENNIAL VEGETATIVE COVER OR PERMANENT ASPHALT COVER INCLUDING BASIN SIDE SLOPES AND BOTTOM), TEMPORARY EROSION CONTROLS MAY BE REMOVED AND NO SEDIMENT RUNOFF IS TO ENTER THE BASIN.

VEGETATED CHANNELS:

1. VEGETATED CHANNELS SHALL BE CONSTRUCTED FREE OF ROCKS, TREE ROOTS, STUMPS, OR OTHER PROJECTIONS THAT WILL IMPEDE NORMAL CHANNEL FLOW AND/OR PREVENT GOOD LINING TO SOIL CONTACT. THE CHANNEL SHALL BE INITIALLY OVER-EXCAVATED TO ALLOW FOR THE PLACEMENT OF TOPSOIL.
2. ALL CHANNELS MUST BE IMMEDIATELY STABILIZED WITH TEMPORARY OR PERMANENT EROSION MATTING, ROCK LINING, OR OTHER SUITABLE STABILIZATION AS SHOWN ON THESE PLANS.
3. ROUGH GRADE THE CHANNEL. EQUIPMENT SHALL AVOID EXCESSIVE COMPACTION AND/OR LAND DISTURBANCE. EXCAVATING EQUIPMENT SHALL OPERATE FROM THE SIDE OF THE CHANNEL AND NEVER ON THE BOTTOM. IF EXCAVATION LEADS TO SUBSTANTIAL COMPACTION OF THE SUBGRADE, 18 INCHES SHALL BE REMOVED AND REPLACED WITH A BLEND OF TOPSOIL AND SAND TO PROMOTE INFILTRATION AND BIOLOGICAL GROWTH. AT THE VERY LEAST, TOPSOIL SHALL BE THOROUGHLY DEEP PLOWED INTO THE SUBGRADE IN ORDER TO PENETRATE THE COMPACTED ZONE AND PROMOTE AERATION AND THE FORMATION OF MICROPORES. FOLLOWING THIS, THE AREA SHOULD BE DISKED PRIOR TO FINAL GRADING OF TOPSOIL.
4. FINE GRADE THE VEGETATED CHANNEL. ACCURATE GRADING IS CRUCIAL FOR SWALES. EVEN THE SMALLEST NON-CONFORMITIES MAY COMPROMISE FLOW CONDITIONS.
5. SEED, VEGETATE AND INSTALL PROTECTIVE LINING AS PER APPROVED PLANS AND ACCORDING TO THE SEEDING SCHEDULE. PLANT THE CHANNEL AT A TIME OF THE YEAR WHEN SUCCESSFUL ESTABLISHMENT WITHOUT IRRIGATION IS MOST LIKELY. HOWEVER, TEMPORARY IRRIGATION MAY BE NEEDED IN PERIODS OF LITTLE RAIN OR DROUGHT. VEGETATION SHOULD BE ESTABLISHED AS SOON AS POSSIBLE TO PREVENT EROSION AND SCOUR.
6. ONCE ALL TRIBUTARY AREAS ARE SUFFICIENTLY STABILIZED, REMOVE TEMPORARY EROSION AND SEDIMENT CONTROLS. IT IS VERY IMPORTANT THAT THE CHANNEL BE STABILIZED BEFORE RECEIVING UPLAND STORMWATER FLOW.
7. REGRADE AND RESEED IMMEDIATELY AFTER CONSTRUCTION AND STABILIZATION HAS OCCURRED. ANY DAMAGED AREAS SHOULD BE FULLY RESTORED TO ENSURE FUTURE FUNCTIONALITY OF THE CHANNEL.
8. INSTALL EARTHEN CHECK DAMS PER THE PLANS.

PERMEABLE SOIL MEDIA

ALL PROPOSED PERMEABLE SOIL MATERIALS TO BE PLACED IN STORMWATER BMPS SHOULD BE ANALYZED FOR GRADATION, ORGANIC CONTENT, PH AND APPROPRIATE NUTRIENT LEVELS AS REQUIRED BASED ON THE PLANTING REQUIREMENTS. A MINIMUM OF 1 TEST SHOULD BE PERFORMED FOR EACH PROPOSED IMPORT SOURCE OR EACH ON-SITE MIXTURE. IT SHOULD BE NOTED THAT THE LABORATORY TESTING TIME IS TYPICALLY 2 WEEKS. ACCORDINGLY, TESTING OF THE MATERIAL SHOULD BE PERFORMED EARLY DURING GRADING ACTIVITIES, AND THE PROJECT SCHEDULE SHOULD ACCOUNT FOR THE TIME TO COMPLETE THE TESTING.

ANY SOIL MEDIA PLACED IN PCSM BMPS MUST HAVE A MINIMUM INFILTRATION RATE OF 2 INCHES/HOUR. RECOMMENDED SOIL MEDIA MIXTURE FOR PCSM BMPS IS 20% COMPOST, 20% SAND, AND 60% TOPSOIL.

INSTALLATION OF SOIL MEDIA IN PCSM BMPS SHALL BE DONE WITHOUT COMPACTING IN-SITU SOILS. LIGHT TAMPING IS ACCEPTABLE. OVERFILL TO ACCOUNT FOR SETTLING.

TOPSOIL SHOULD BE LIMITED TO A MAXIMUM OF 25 PERCENT FINES CONSISTING OF CLAY AND SILT PARTICLES WITH THE CLAY CONTENT NOT EXCEEDING 10 PERCENT. PLACEMENT OF MATERIALS WITH INCREASED FINES WILL SUBSTANTIALLY DECREASE INFILTRATION AND INCREASE THE RISK OF NO INFILTRATION.

SOILS LEGEND

BrB – BRINKERTON SILT LOAM, 3 TO 8% SLOPES
CIC – CAVODE SILT LOAM, 3 TO 15% SLOPES
CID – CAVODE SILT LOAM, 15 TO 25% SLOPES
TaB – TILSIT SILT LOAM, 3 TO 8% SLOPES
UeC – URBAN LAND-ERNEST COMPLEX, 8 TO 15% SLOPES

SOILS LIMITATION NOTES

1. AREAS TO BE FILLED ARE TO BE CLEARED, GRUBBED, AND STRIPPED OF TOPSOIL TO REMOVE TREES, VEGETATION, ROOTS, AND OTHER OBJECTIONABLE MATERIAL.
2. ALL FILLS SHALL BE COMPACTED AS REQUIRED TO REDUCE EROSION, SLIPPAGE, SETTLEMENT, SUBSIDENCE OR OTHER RELATED PROBLEMS. FILL INTENDED TO SUPPORT BUILDINGS, STRUCTURES, AND CONDUITS, ETC. SHALL BE COMPACTED IN ACCORDANCE WITH LOCAL REQUIREMENTS OR CODES.
3. ALL EARTHEN FILLS SHALL BE PLACED IN COMPACTED LAYERS NOT TO EXCEED 9 INCHES IN THICKNESS.
4. FILL MATERIALS SHALL BE FREE OF FROZEN PARTICLES, BRUSH, ROOTS, SOD, OR OTHER FOREIGN OR OBJECTIONABLE MATERIALS THAT WOULD INTERFERE WITH OR PREVENT CONSTRUCTION OF SATISFACTORY FILLS.
5. FROZEN MATERIALS OR SOFT, MUCKY, OR HIGHLY COMPRESSIBLE MATERIALS SHALL NOT BE INCORPORATED INTO FILLS.
6. FILL SHALL NOT BE PLACED ON SATURATED OR FROZEN SURFACES.
7. SEEPS OR SPRINGS ENCOUNTERED DURING CONSTRUCTION SHALL BE HANDLED IN ACCORDANCE WITH THE STANDARD AND SPECIFICATION FOR SUBSURFACE DRAIN OR OTHER APPROVED METHOD.

SOIL LIMITATIONS

SOIL NAME	CUTBACKS CAVE	CORROSIVE TO CONCRETE \ STEEL*	DROUGHTY	EASILY ERODIBLE	FLOODING	DEPTH TO SATURATED ZONE \ SEASONAL HIGH WATER TABLE	HYDRIC\HYDRIC INCLUSIONS	LOW STRENGTH \ LANDSLIDE PRONE	SLOW PERCOLATION	PIPING	POOR SOURCE OF TOPSOIL	FROST ACTION	SHRINK-SWELL	POTENTIAL SINKHOLE	PONDING	WETNESS
BRINKERTON	X	C/S	X	X		X	X	X	X	X	X	X	X			X
CAVODE	X	C/S		X		X	X	X	X	X		X	X			X
ERNEST	X	C/S		X		X	X	X	X	X	X	X	X			X
TILSIT	X	C/S		X		X	X	X	X	X						X

SOIL LIMITATION RESOLUTIONS

LIMITATION	RESOLUTION
CUTBANKS CAVE	CONDUCT TRENCHING OPERATIONS IN ACCORDANCE WITH OSHA TECHNICAL MANUAL FOR TRENCHING. STABILIZE BANKS IMMEDIATELY WITH SEED, MULCH, EROSION CONTROL MATS, BONDED FIBER MATRIX, OR A COMBINATION OF THESE AND/OR OTHER METHODS.
CORROSIVE TO CONCRETE OR STEEL	PROTECT CONCRETE AND STEEL WITH PROTECTIVE COATINGS, SELECT ALTERNATIVE MATERIALS IN LIEU OF CONCRETE OR STEEL, OR A COMBINATION OF THESE AND OR OTHER METHODS.
DROUGHTY	SELECT VEGETATIVE SPECIES TOLERANT TO DRY CONDITIONS, IRRIGATE VEGETATED AREAS, OR IMPLEMENT COMBINATIONS OF THESE AND/OR OTHER METHODS.
EASILY ERODIBLE	PROVIDE TEMPORARY OR PERMANENT CHANNEL LINING, DECREASE CHANNEL GRADE, INCREASE CHANNEL WIDTH, SELECT VEGETATION WITH A GREATER RETARDANCE, SELECT PERMANENT LININGS OTHER THAN GRASSES, OR IMPLEMENTING COMBINATIONS OF THESE AND/OR OTHER METHODS.
DEPTH TO SATURATED ZONE, SEASONAL HIGH WATER TABLE, WETNESS & HYDRIC SOILS	SELECT VEGETATIVE SPECIES TOLERANT TO WET CONDITIONS, TILE VEGETATED AREAS, OR IMPLEMENT COMBINATIONS OF THESE AND/OR OTHER METHODS. UTILIZE PUMPED WATER FILTER BAGS TO DEWATER DISTURBED ARES DURING CONSTRUCTION.
LOW STRENGTH \ LANDSLIDE PRONE	LOCATE ROADWAYS TO OTHER SOIL TYPES, IMPORT OTHER SOILS FOR THESE ROADWAY CONSTRUCTION, OR IMPLEMENT A COMBINATION OF THESE AND/OR OTHER METHODS. FOR CUT/FILL SLOPES, REDUCE SLOPE, INSTALL EROSION CONTROL MATTING, OR IMPLEMENT A COMBINATION OF THESE AND/OR OTHER METHODS.
SLOW PERCOLATION	LOCATE INFILTRATION FACILITIES TO ANOTHER SOIL TYPE, RESTRICT CONSTRUCTION TRAFFIC AT THOSE LOCATIONS, TILL SOIL IN THOSE LOCATIONS, ADD SOIL AMENDMENTS SUCH AS COMPOST AT THOSE LOCATIONS.
PIPING	IMPORT OTHER SOIL FOR EMBANKMENTS OF SEDIMENT BASINS, SEDIMENT TRAPS, STORM WATER RETENTION BASINS AND STORM WATER DETENTION BASINS, LOCATE THOSE FACILITIES ON OTHER SOIL TYPES, LIMIT EMBANKMENT SLOPE STEEPNESS, OR IMPLEMENT COMBINATIONS OF THESE AND/OR OTHER METHODS.
POOR SOURCE OF TOPSOIL	IDENTIFY AND RESOLVE CHARACTERISTICS THAT RENDER THE SOIL TYPES POORLY SUITED AS TOPSOIL. PERFORM SOIL TESTS TO DETERMINE THE REQUIRED SOIL AMENDMENTS AND APPLICATION RATES. IDENTIFY SOILS ON-SITE THAT ARE ADEQUATE SOURCES OF TOPSOIL AND STOCKPILE THESE FOR USE DURING RESTORATION.
FROST ACTION	IMPORT OTHER SOIL FOR EMBANKMENTS OF SEDIMENT BASINS, SEDIMENT TRAPS, STORM WATER RETENTION BASINS AND STORM WATER DETENTION BASINS, LOCATE THOSE FACILITIES ON OTHER SOIL TYPES, DO NOT CONSTRUCT EMBANKMENTS DURING PERIODS PRONE TO FROST, OR IMPLEMENT COMBINATIONS OF THESE AND/OR OTHER METHODS.
SHRINK-SWELL	LOCATE FACILITIES THAT MAY BE SUSCEPTIBLE TO DAMAGE FROM SHRINK OR SWELLING TO ANOTHER SOIL TYPE, IMPORT OTHER SOILS FOR THESE FACILITIES, OR IMPLEMENT COMBINATION OF THESE AND/OR OTHER METHODS.

PLAN BOOK	PAGE
434	28

HRG
HERBERT, ROWLAND & GRUBIC, INC.
220 WEST KENSINGER DRIVE
SUITE 100
CRANBERRY TOWNSHIP, PA 16066
724.779.4777 | hrg-inc.com

POST CONSTRUCTION STORMWATER MANAGEMENT PLAN
FOR
COMMUNITY PARK NORTH IMPROVEMENTS
CRANBERRY TOWNSHIP
2525 ROCHESTER ROAD
CRANBERRY TOWNSHIP, PENNSYLVANIA 16066
CRANBERRY TOWNSHIP BUTLER COUNTY PENNSYLVANIA

PROFESSIONAL SEAL:
ANNA TERESA HATTEN
REGISTRATION NUMBER LA003003

HRG PROJECT NUMBER:	R001261.0555
PLAN DATE:	JUNE 2024
DRAWING SCALE:	AS SHOWN
PROJ. MANAGER:	ATH

REVISIONS

NO.	DATE	DESCRIPTION
1	08.30.2024	REVISED PER BCCD COMMENTS.
2	12.20.2024	REVISED PER PADEP COMMENTS.
3	03.14.2025	REVISED PER BCCD COMMENTS.
4		
5		
6		
7		
8		
9		

SHEET TITLE:
PCSM NOTES

SHEET: PCNT-1 | 07

FILE PATH & NAME: P:\0012\001261_0555\C3D\Plan Sets\L001261055SDT-PC.dwg LAYOUT:PC_PCNT-1 LAST PLOTTED:3/13/2025 4:58 PM BY:JTAI

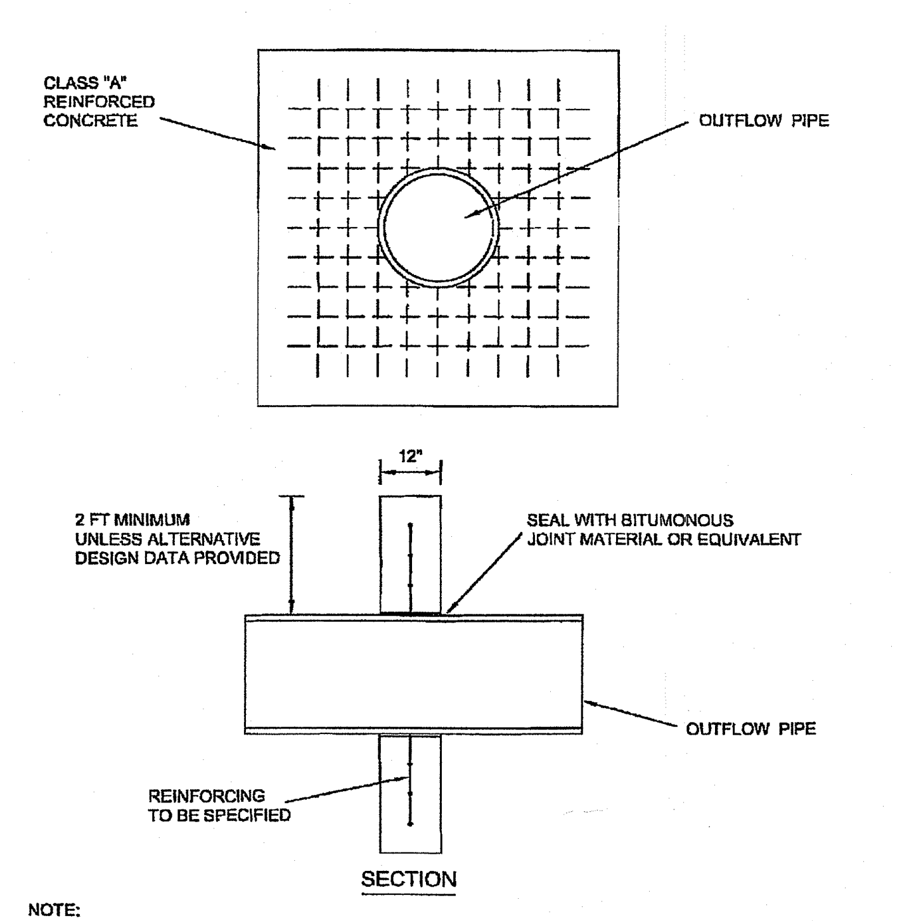
CLASS "A" REINFORCED CONCRETE
OUTFLOW PIPE
12"
2 FT MINIMUM UNLESS ALTERNATIVE DESIGN DATA PROVIDED
SEAL WITH BITUMONOUS JOINT MATERIAL OR EQUIVALENT
OUTFLOW PIPE
REINFORCING TO BE SPECIFIED
SECTION

NOTE:
NUMBER OF ANTI-SEEPAGE COLLARS TO BE INSTALLED AND SPACING TO BE SPECIFIED ON DETENTION FACILITY PROFILE

CRANBERRY
TOWNSHIP
TOGETHER TOWARD TOMORROW
2525 Rochester Road Suite 400
Cranberry Township, PA 16066-6499
(724) 776-4806 FAX (724) 776-5488

ANTI-SEEPAGE COLLARS

NO.	DATE	NO.	DATE	DRAWING
ORIGINAL	2/11/99			SS-20
REVISED	MAY 2004			

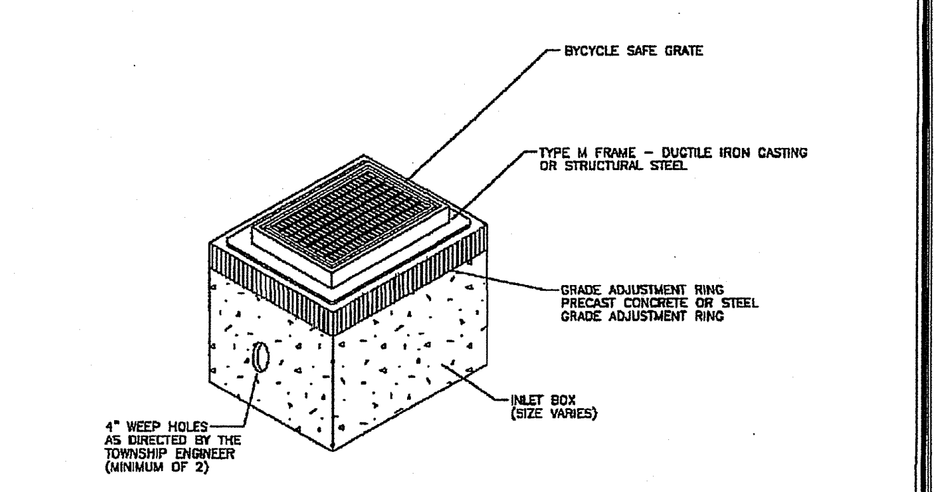
BYCYCLE SAFE GRATE
TYPE M FRAME – DUCTILE IRON CASTING OR STRUCTURAL STEEL
GRADE ADJUSTMENT RING PRECAST CONCRETE OR STEEL GRADE ADJUSTMENT RING
INLET BOX (SIZE VARIES)
4" WEEP HOLES AS DIRECTED BY THE TOWNSHIP ENGINEER (MINIMUM OF 2)

NOTES:
1. ALL CONSTRUCTION SHALL BE IN ACCORDANCE WITH PENNDOT PUBLICATION 408, SECTION 605 AND STANDARDS FOR ROADWAY CONSTRUCTION, RC–34. CONTRACTOR SHALL VERIFY INLET BOX SIZING BASED ON PIPE SIZES AND ALIGNMENT PRIOR TO ORDERING PRECAST STRUCTURES.
2. ALL DRAINAGE STRUCTURES SHALL HAVE POURED–IN–PLACE CONCRETE CHANNEL BOTTOMS.
3. LADDER BARS TO BE INSTALLED IN STRUCTURES EXCEEDING A DEPTH OF 5 FEET.

NOT TO SCALE

REFERENCE RC–34 – PENNDOT PUBLICATION 72

CRANBERRY
TOWNSHIP
TOGETHER TOWARD TOMORROW
2525 Rochester Road Suite 400
Cranberry Township, PA 16066-6499
(724) 776-4806 FAX (724) 776-5488

TYPE "M" INLET DETAIL

NO.	DATE	NO.	DATE	DRAWING
ORIGINAL	APRIL 1995			SS-05
REVISION	NOVEMBER 27, 1996			
REVISION	MAY 2004			

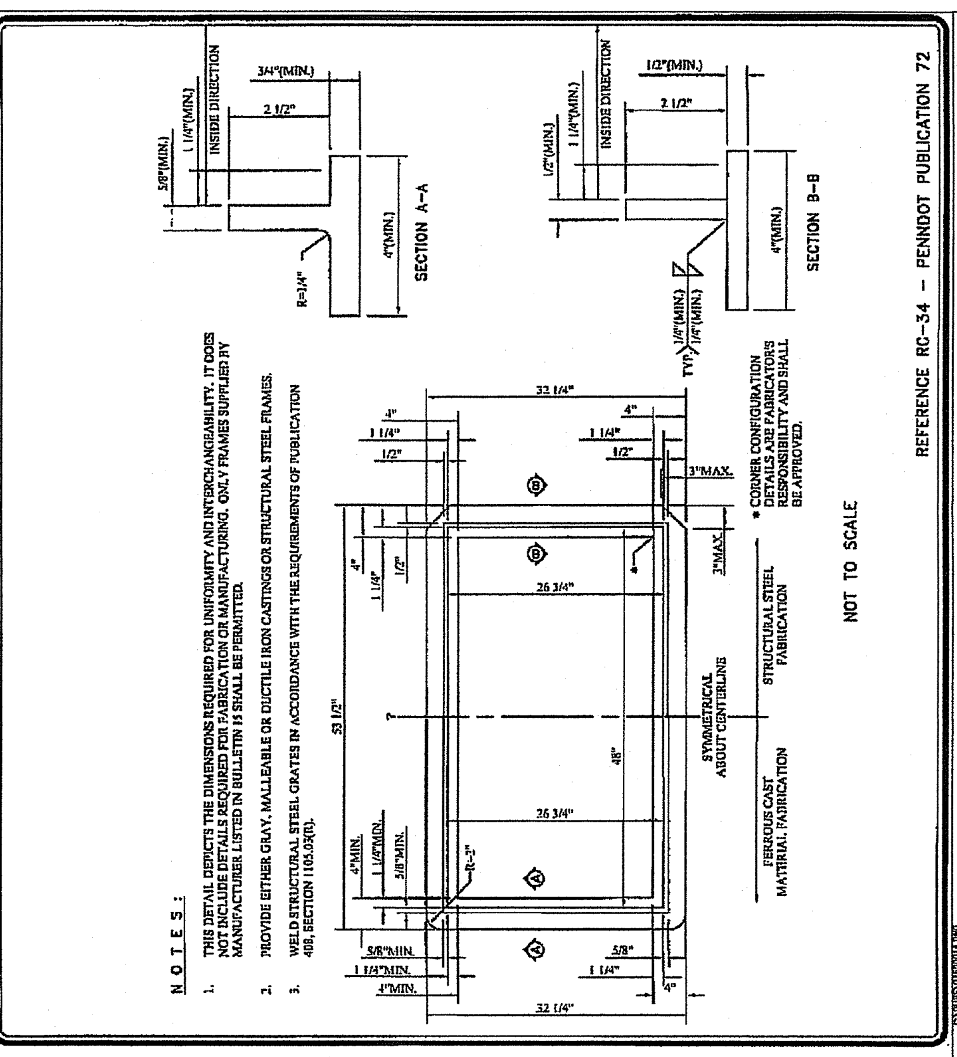
5/8"(MIN.)
1 1/4"(MIN.)
INSIDE DIRECTION
3/4"(MIN.)
2 1/2"
R=1/4"
4"(MIN.)
SECTION A–A
1/2"(MIN.)
1 1/4"(MIN.)
INSIDE DIRECTION
1/2"(MIN.)
2 1/2"
1/4"(MIN.)
1/4"(MIN.)
TYP.
4"(MIN.)
SECTION B–B
NOTES:
1. THIS DETAIL DEPICTS THE DIMENSIONS REQUIRED FOR UNIFORMITY AND INTERCHANGEABILITY. IT DOES NOT INCLUDE DETAILS REQUIRED FOR FABRICATION OR MANUFACTURING. ONLY FRAMES SUPPLIED BY MANUFACTURER LISTED IN BULLETIN 15 SHALL BE PERMITTED.
2. PROVIDE EITHER GRAY, MALLEABLE OR DUCTILE IRON CASTINGS OR STRUCTURAL STEEL FRAMES.
3. WELD STRUCTURAL STEEL GRATES IN ACCORDANCE WITH THE REQUIREMENTS OF PUBLICATION 408, SECTION 1105.03(l).
32 1/4"
4"
1 1/4"
1/2"
4"
1 1/4"
1/2"
3"MAX.
3"MAX.
26 3/4"
53 1/2"
48"
26 3/4"
R=2"
4"MIN.
1 1/4"MIN.
5/8"MIN.
5/8"MIN.
1 1/4"MIN.
4"MIN.
5/8"
1 1/4"
4"
32 1/4"
SYMMETRICAL ABOUT CENTERLINE
STRUCTURAL STEEL FABRICATION
FERROUS CAST MATERIAL FABRICATION
* CORNER CONFIGURATION DETAILS ARE FABRICATOR'S RESPONSIBILITY AND SHALL BE APPROVED.
NOT TO SCALE
REFERENCE RC–34 – PENNDOT PUBLICATION 72

CRANBERRY
TOWNSHIP
TOGETHER TOWARD TOMORROW
2525 Rochester Road Suite 400
Cranberry Township, PA 16066-6499
(724) 776-4806 FAX (724) 776-5488

TYPE "M" INLET FRAME DETAIL

NO.	DATE	NO.	DATE	DRAWING
ORIGINAL	NOVEMBER 27, 1996			SS-05A
REVISED	MAY 2004			

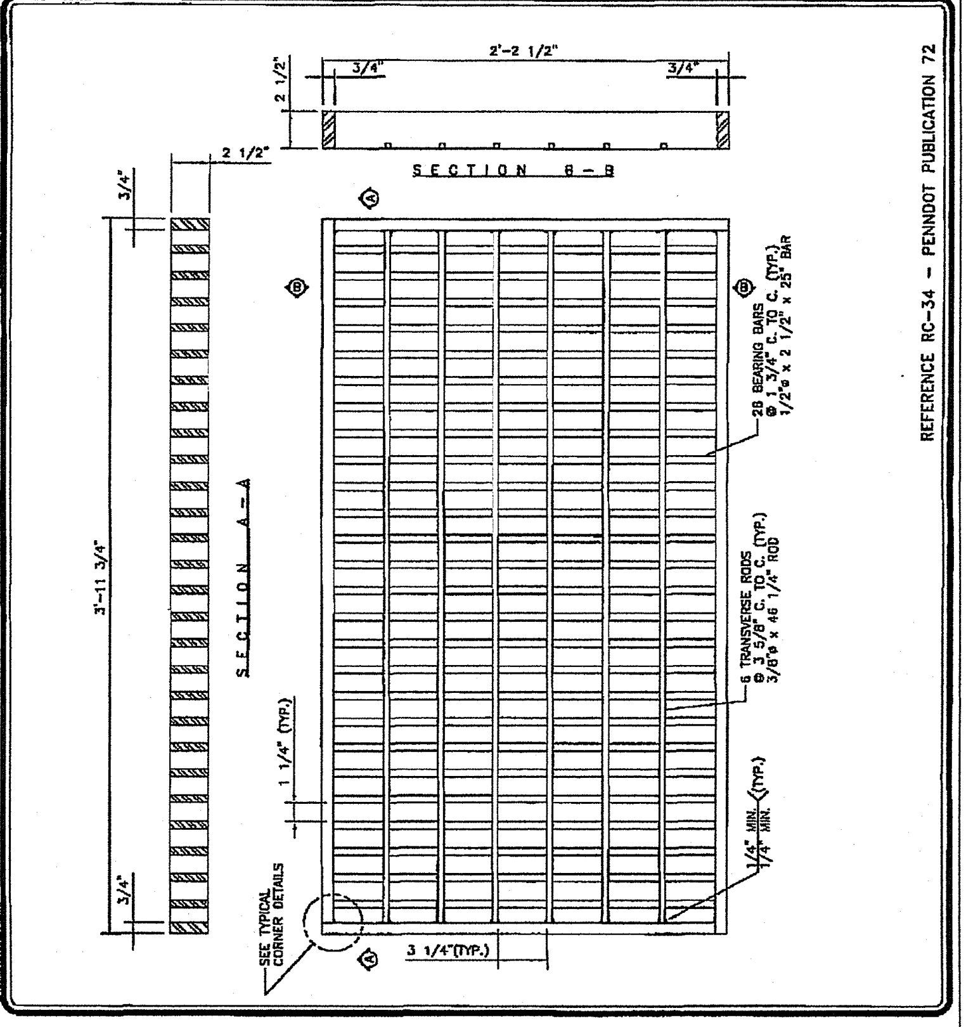
2'–2 1/2"
3/4"
3/4"
2 1/2"
2 1/2"
SECTION B–B
3/4"
3'–11 3/4"
SECTION A–A
1 1/4" (TYP.)
3/4"
SEE TYPICAL CORNER DETAILS
3 1/4"(TYP.)
28 BEARING BARS @ 1 3/4" C. TO C. (TYP.) 1/2"ø x 2 1/2" x 25" BAR
6 TRANSVERSE RODS @ 3 5/8" C. TO C. (TYP.) 3/8"ø x 46 1/4" ROD
1/4" MIN. (TYP.)
REFERENCE RC–34 – PENNDOT PUBLICATION 72

CRANBERRY
TOWNSHIP
TOGETHER TOWARD TOMORROW
2525 Rochester Road Suite 400
Cranberry Township, PA 16066-6499
(724) 776-4806 FAX (724) 776-5488

STRUCTURAL STEEL BICYCLE SAFE GRATE

NO.	DATE	NO.	DATE	DRAWING
ORIGINAL	APRIL 1995			SS-05B
REVISED	NOVEMBER 27, 1996			
REVISED	MAY 2004			

PIPE DIA.	L*	W	A
15"	4.0'	4.0'	12"
18"	4.0'	4.0'	12"
24"	4.5'	4.25'	12"
36"	4.5'	4.25'	12"
48"	5.0'	4.25'	12"

NOTES:
1. CONCRETE SHALL BE CLASS "A"
2. EXPOSED EDGES SHALL BE CHAMFERED ONE (1) INCH.
3. ADD 1'–0" TO DIMENSION 'L' WHEN ORIFICE PLATE IS TO BE PLACED ON HEADWALL.

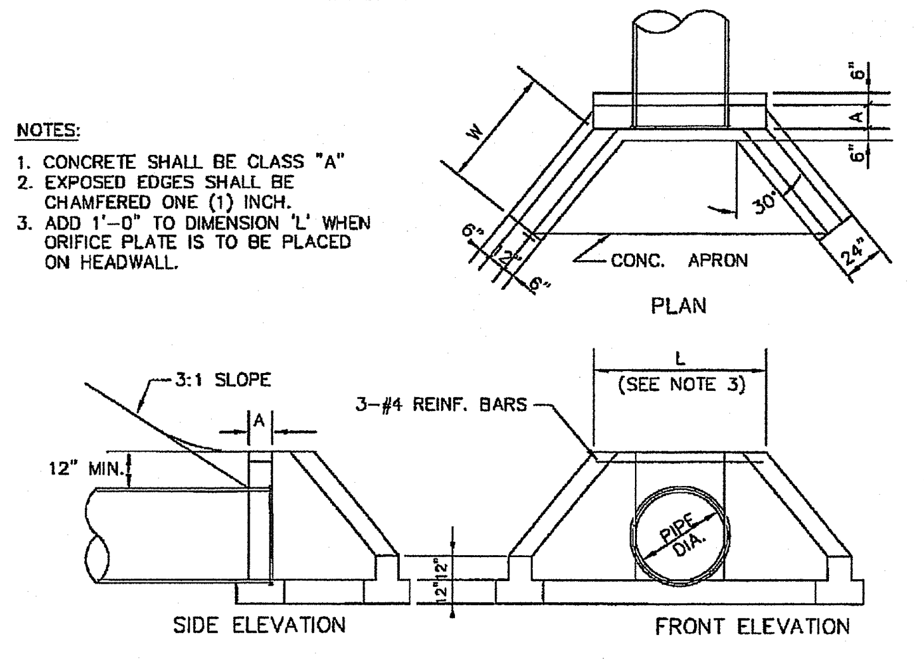
W
6"
A
6"
30°
24"
6"
12"
6"
CONC. APRON
PLAN
3:1 SLOPE
A
12" MIN.
3–#4 REINF. BARS
L
(SEE NOTE 3)
12"
12"
PIPE DIA.
SIDE ELEVATION
FRONT ELEVATION

REFERENCE RC–31 – PENNDOT PUBLICATION 72.

CRANBERRY
TOWNSHIP
TOGETHER TOWARD TOMORROW
2525 Rochester Road Suite 400
Cranberry Township, PA 16066-6499
(724) 776-4806 FAX (724) 776-5488

STANDARD TYPE D-W ENDWALL/HEADWALL DETAIL

NO.	DATE	NO.	DATE	DRAWING
ORIGINAL	AUGUST 1993			SS-02
REVISED	FEBRUARY 1999			
REVISED	MAY 2004			

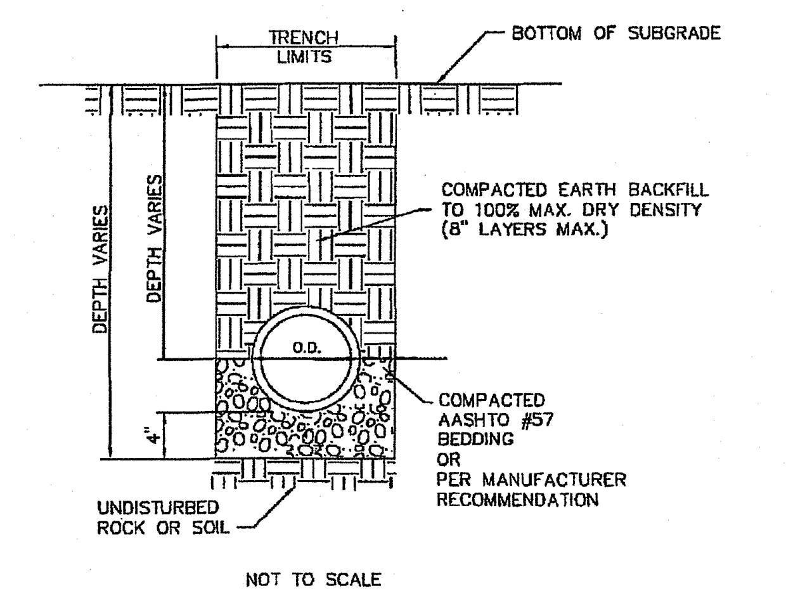
TRENCH LIMITS
BOTTOM OF SUBGRADE
DEPTH VARIES
DEPTH VARIES
COMPACTED EARTH BACKFILL TO 100% MAX. DRY DENSITY (8" LAYERS MAX.)
O.D.
4"
COMPACTED AASHTO #57 BEDDING OR PER MANUFACTURER RECOMMENDATION
UNDISTURBED ROCK OR SOIL

NOT TO SCALE

NOTES:
1. MATERIAL OBTAINED IN TRENCH EXCAVATION SHALL NOT BE UTILIZED FOR BACKFILL. THIS REQUIREMENT SHALL APPLY TO BACKFILL IN SHOULDER AREAS AS WELL AS BACKFILL WITHIN THE CARTWAY.
2. AGGREGATE MATERIAL SHALL BE PLACED IN LAYERS NOT TO EXCEED EIGHT INCHES AND COMPACTED TO THE FOLLOWING MINIMUM REQUIREMENTS. SHOULDER AREAS AS WELL AS BACKFILL WITHIN THE CARTWAY.

MAXIMUM DRY WEIGHT OF BACKFILL MATERIAL (AS DETERMINED IN ACCORDANCE WITH AASHTO T99)	MAXIMUM FIELD COMPACTION REQUIREMENT (PERCENT OF MAXIMUM DRY WEIGHT)
LESS THE 95.0 LB/CU.FT.	UNSUITABLE MATERIAL
95.0–99.9 LB./CU. FT.	100.
100.0–109.9 LB./CU. FT.	100.
110.0 OR MORE	95%

CRANBERRY
TOWNSHIP
TOGETHER TOWARD TOMORROW
2525 Rochester Road Suite 400
Cranberry Township, PA 16066-6499
(724) 776-4806 FAX (724) 776-5488

TYPICAL STORM SEWER TRENCH DETAIL-WITHIN R.O.W.

NO.	DATE	NO.	DATE	DRAWING
ORIGINAL	APRIL 1995			SS-01
REVISED	APRIL 2001			
REVISED	MAY 2001			
REVISED	MAY 2004			

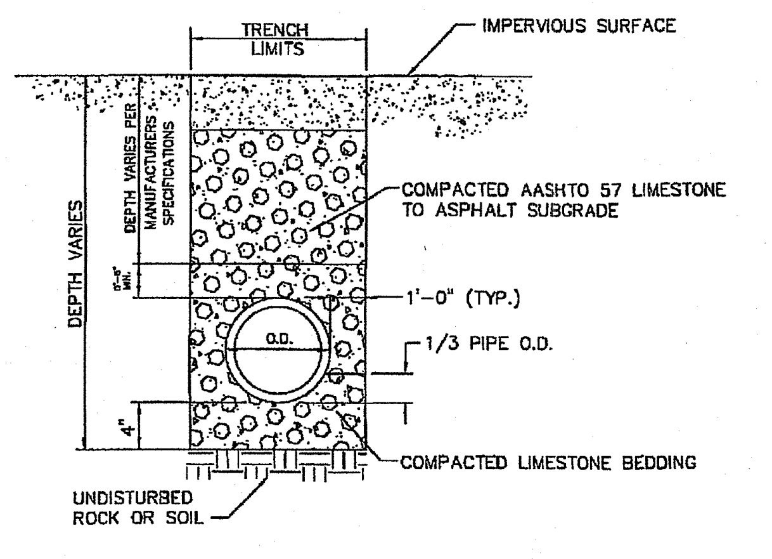
TRENCH LIMITS
IMPERVIOUS SURFACE
DEPTH VARIES
DEPTH VARIES PER MANUFACTURERS SPECIFICATIONS
COMPACTED AASHTO 57 LIMESTONE TO ASPHALT SUBGRADE
1'–0" (TYP.)
O.D.
1/3 PIPE O.D.
4"
COMPACTED LIMESTONE BEDDING
UNDISTURBED ROCK OR SOIL

NOT TO SCALE

NOTES:
1. MATERIAL OBTAINED IN TRENCH EXCAVATION SHALL NOT BE UTILIZED FOR BACKFILL. THIS REQUIREMENT SHALL APPLY TO BACKFILL IN SHOULDER AREAS.
2. AGGREGATE MATERIAL SHALL BE PLACED IN LAYERS NOT TO EXCEED EIGHT INCHES AND COMPACTED TO THE FOLLOWING MINIMUM REQUIREMENTS. WITHIN THE CARTWAY.

MAXIMUM DRY WEIGHT OF BACKFILL MATERIAL (AS DETERMINED IN ACCORDANCE WITH AASHTO T99)	MAXIMUM FIELD COMPACTION REQUIREMENT (PERCENT OF MAXIMUM DRY WEIGHT)
LESS THE 95.0 LB/CU.FT.	UNSUITABLE MATERIAL
95.0–99.9 LB./CU. FT.	100.
100.0–109.9 LB./CU. FT.	100.
110.0 OR MORE	95%

CRANBERRY
TOWNSHIP
TOGETHER TOWARD TOMORROW
2525 Rochester Road Suite 400
Cranberry Township, PA 16066-6499
(724) 776-4806 FAX (724) 776-5488

TYPICAL STORM SEWER TRENCH DETAIL - IMPERVIOUS AREA

NO.	DATE	NO.	DATE	DRAWING
ORIGINAL	APRIL 1995			SS-01A
REVISED	JANUARY 2001			
REVISED	APRIL 2001			
REVISED	APRIL 2004			

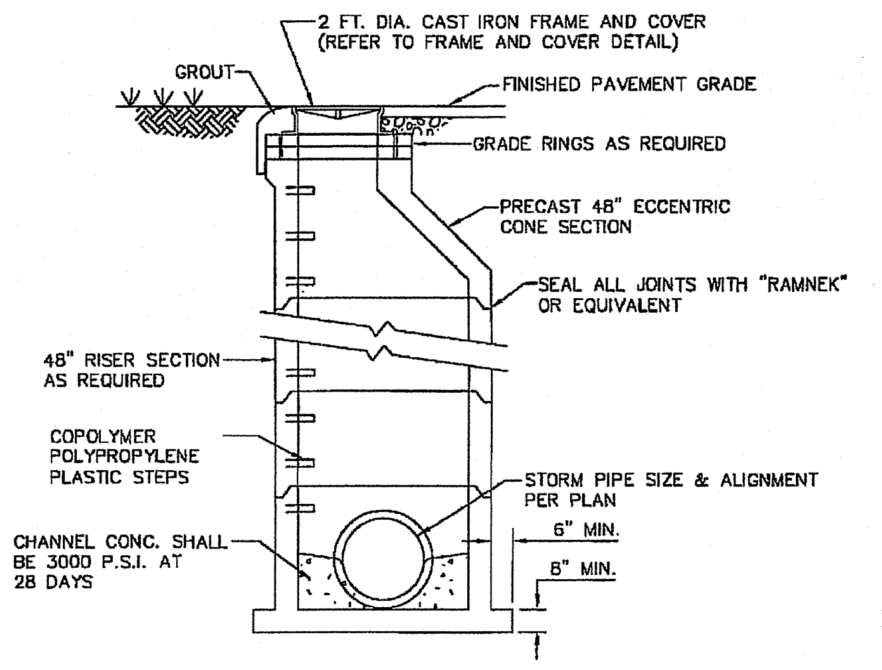
2 FT. DIA. CAST IRON FRAME AND COVER (REFER TO FRAME AND COVER DETAIL)
GROUT
FINISHED PAVEMENT GRADE
GRADE RINGS AS REQUIRED
PRECAST 48" ECCENTRIC CONE SECTION
SEAL ALL JOINTS WITH "RAMNEK" OR EQUIVALENT
48" RISER SECTION AS REQUIRED
COPOLYMER POLYPROPYLENE PLASTIC STEPS
STORM PIPE SIZE & ALIGNMENT PER PLAN
CHANNEL CONC. SHALL BE 3000 P.S.I. AT 28 DAYS
6" MIN.
8" MIN.

ALL MATERIALS AND CONSTRUCTION SHALL MEET REQUIREMENTS OF PENNDOT PUBLICATION 408

REFERENCE RC–39 – PENNDOT PUBLICATION 72

CRANBERRY
TOWNSHIP
TOGETHER TOWARD TOMORROW
2525 Rochester Road Suite 400
Cranberry Township, PA 16066-6499
(724) 776-4806 FAX (724) 776-5488

STORM MANHOLE DETAIL (TYPICAL SECTION)

NO.	DATE	NO.	DATE	DRAWING
ORIGINAL	AUGUST 1995			SS-08
REVISED	JANUARY 2003			
REVISED	MAY 2004			

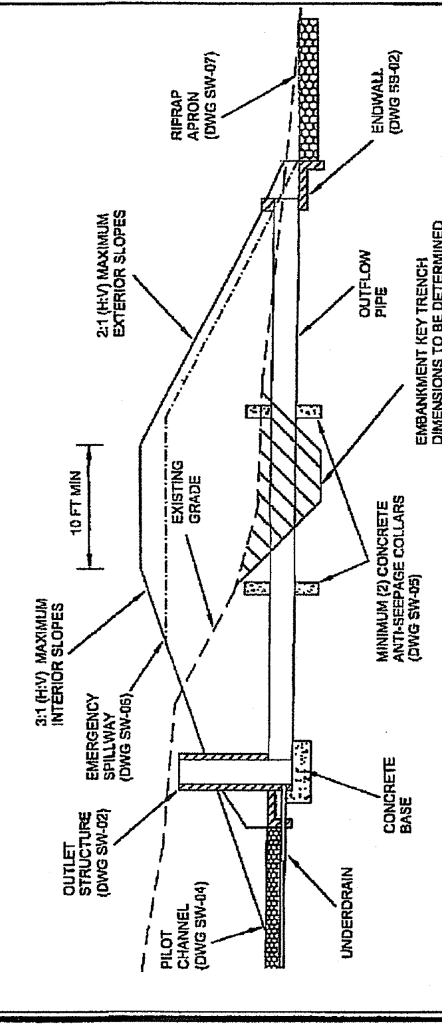
RIPRAP APRON (DWG SW-07)
ENDWALL (DWG SS-02)
2:1 (H:V) MAXIMUM EXTERIOR SLOPES
OUTFLOW PIPE
EMBANKMENT KEY TRENCH DIMENSIONS TO BE DETERMINED BY GEOTECHNICAL ENGINEER
10 FT MIN
EXISTING GRADE
MINIMUM (2) CONCRETE ANTI-SEEPAGE COLLARS (DWG SW-05)
3:1 (H:V) MAXIMUM INTERIOR SLOPES
EMERGENCY SPILLWAY (DWG SW-06)
OUTLET STRUCTURE (DWG SW-02)
CONCRETE BASE
PILOT CHANNEL (DWG SW-04)
UNDERDRAIN

CRANBERRY
TOWNSHIP
TOGETHER TOWARD TOMORROW
2525 Rochester Road Suite 400
Cranberry Township, PA 16066-6499
(724) 776-4806 FAX (724) 776-5488

DETENTION FACILITY EMBANKMENT (TYPICAL)

NO.	DATE	NO.	DATE	DRAWING
ORIGINAL	2/10/99			SS-16
REVISED	MAY 2004			

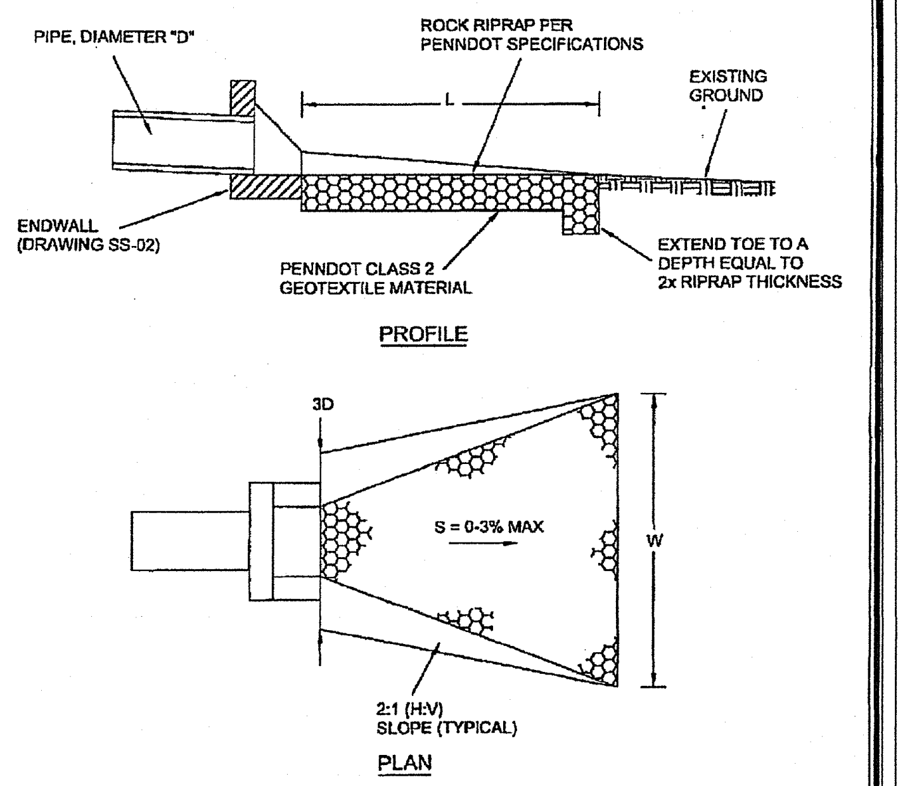
PIPE, DIAMETER "D"
ROCK RIPRAP PER PENNDOT SPECIFICATIONS
EXISTING GROUND
L
ENDWALL (DRAWING SS-02)
PENNDOT CLASS 2 GEOTEXTILE MATERIAL
EXTEND TOE TO A DEPTH EQUAL TO 2x RIPRAP THICKNESS
PROFILE
3D
S = 0-3% MAX
W
2:1 (H:V) SLOPE (TYPICAL)
PLAN

NOTES:
1. RIPRAP APRON TO BE UTILIZED FOR OUTFALLS DISCHARGING TO UNCONFINED AREAS. PIPES DISCHARGING TO CHANNELS OR SWALES SHOULD BE DESIGNED PER DRAWING SS-04.
2. RIPRAP DESIGN DATA AND SPECIFICATIONS, DIMENSIONS "W", AND "L" TO BE SPECIFIED AS PER PADEP CHAPTER 102, EROSION AND SEDIMENT POLLUTION CONTROL MANUAL.

CRANBERRY
TOWNSHIP
TOGETHER TOWARD TOMORROW
2525 Rochester Road Suite 400
Cranberry Township, PA 16066-6499
(724) 776-4806 FAX (724) 776-5488

RIPRAP APRON ENERGY DISSIPATOR (TYPICAL)

NO.	DATE	NO.	DATE	DRAWING
ORIGINAL	2/11/99			SS-22
REVISED	JANUARY 2001			
REVISED	MAY 2004			

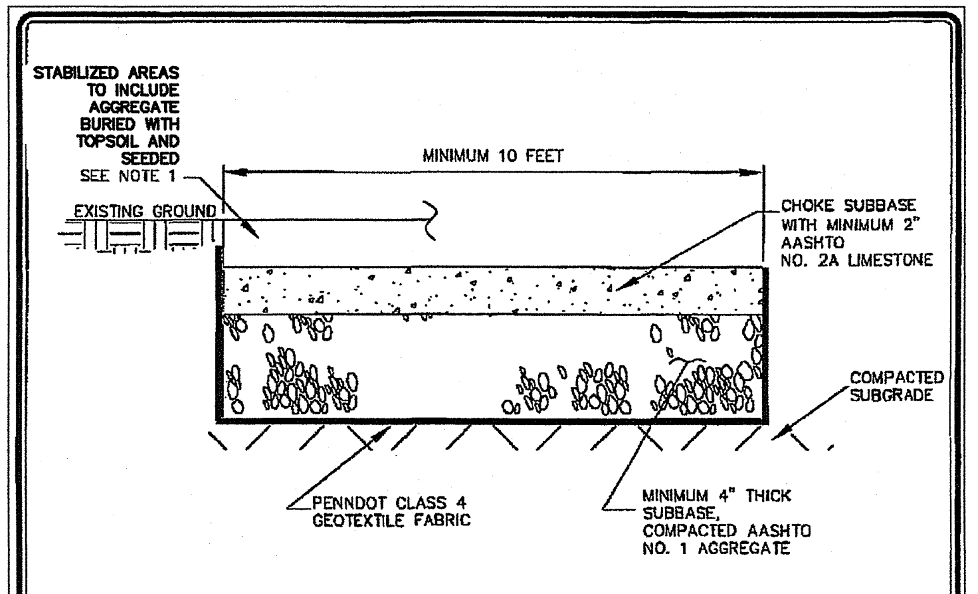
STABILIZED AREAS TO INCLUDE AGGREGATE BURIED WITH TOPSOIL AND SEEDED SEE NOTE 1
MINIMUM 10 FEET
EXISTING GROUND
CHOKE SUBBASE WITH MINIMUM 2" AASHTO NO. 2A LIMESTONE
COMPACTED SUBGRADE
PENNDOT CLASS 4 GEOTEXTILE FABRIC
MINIMUM 4" THICK SUBBASE, COMPACTED AASHTO NO. 1 AGGREGATE

NOTES
1. GRAVEL BASE MAY BE BURIED WITH 6" OF TOPSOIL AND SEEDED. TOPSOIL SHALL BE PLACED ON A GEOTEXTILE FABRIC SEPARATING SOIL FROM GRAVEL BASE.
2. ALTERNATIVE STABILIZATION METHODS MAY BE ACCEPTABLE UPON APPROVAL BY THE TOWNSHIP.
3. MAXIMUM SLOPE OF ACCESS ROAD SHOULD NOT EXCEED 15%

CRANBERRY
TOWNSHIP
TOGETHER TOWARD TOMORROW
2525 Rochester Road Suite 400
Cranberry Township, PA 16066-6499
(724) 776-4806 FAX (724) 776-5488

STABILIZED ACCESS ROAD

NO.	DATE	NO.	DATE	DRAWING
ORIGINAL	JANUARY 2001			SS-23
REVISED	FEBRUARY 2001			
REVISED	MAY 2004			

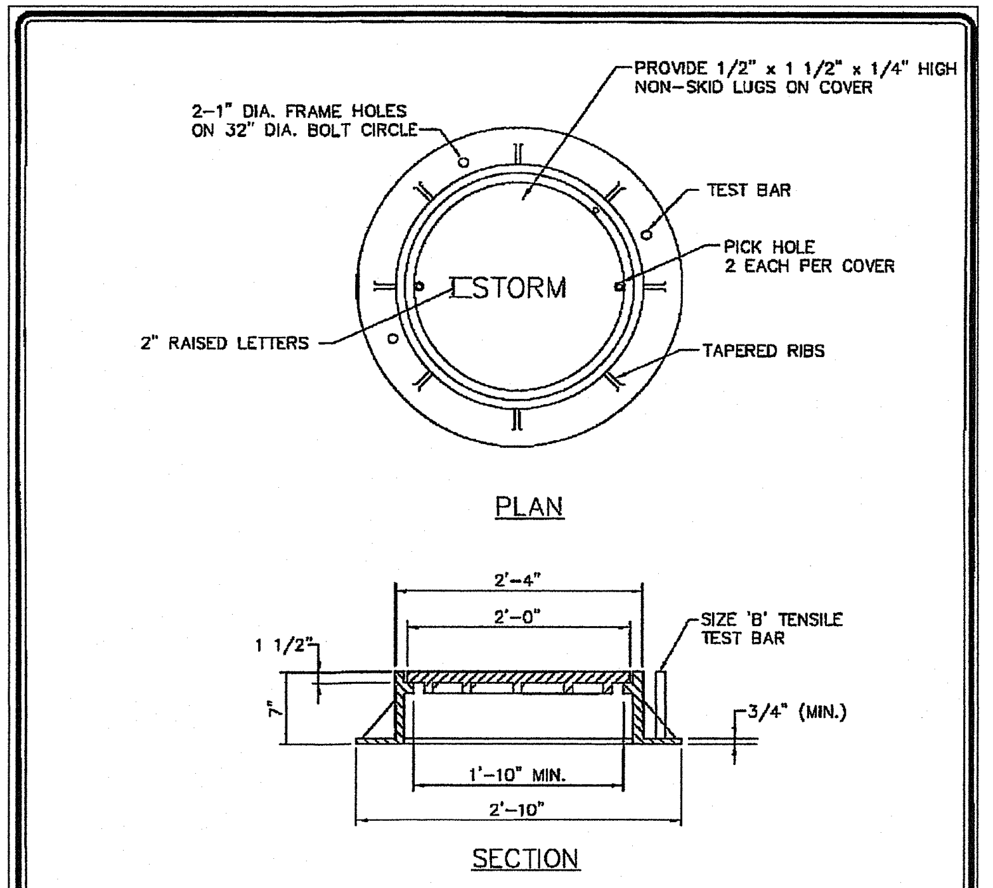
2–1" DIA. FRAME HOLES ON 32" DIA. BOLT CIRCLE
PROVIDE 1/2" x 1 1/2" x 1/4" HIGH NON–SKID LUGS ON COVER
TEST BAR
PICK HOLE 2 EACH PER COVER
STORM
2" RAISED LETTERS
TAPERED RIBS
PLAN
2'–4"
2'–0"
1 1/2"
7"
SIZE 'B' TENSILE TEST BAR
3/4" (MIN.)
1'–10" MIN.
2'–10"
SECTION

NOT TO SCALE

REFERENCE RC–39 – PENNDOT PUBLICATION 72

CRANBERRY
TOWNSHIP
TOGETHER TOWARD TOMORROW
2525 Rochester Road Suite 400
Cranberry Township, PA 16066-6499
(724) 776-4806 FAX (724) 776-5488

STANDARD MANHOLE FRAME & COVER

NO.	DATE	NO.	DATE	DRAWING
ORIGINAL	AUGUST 1995			SS-07
REVISED	MAY 2004			

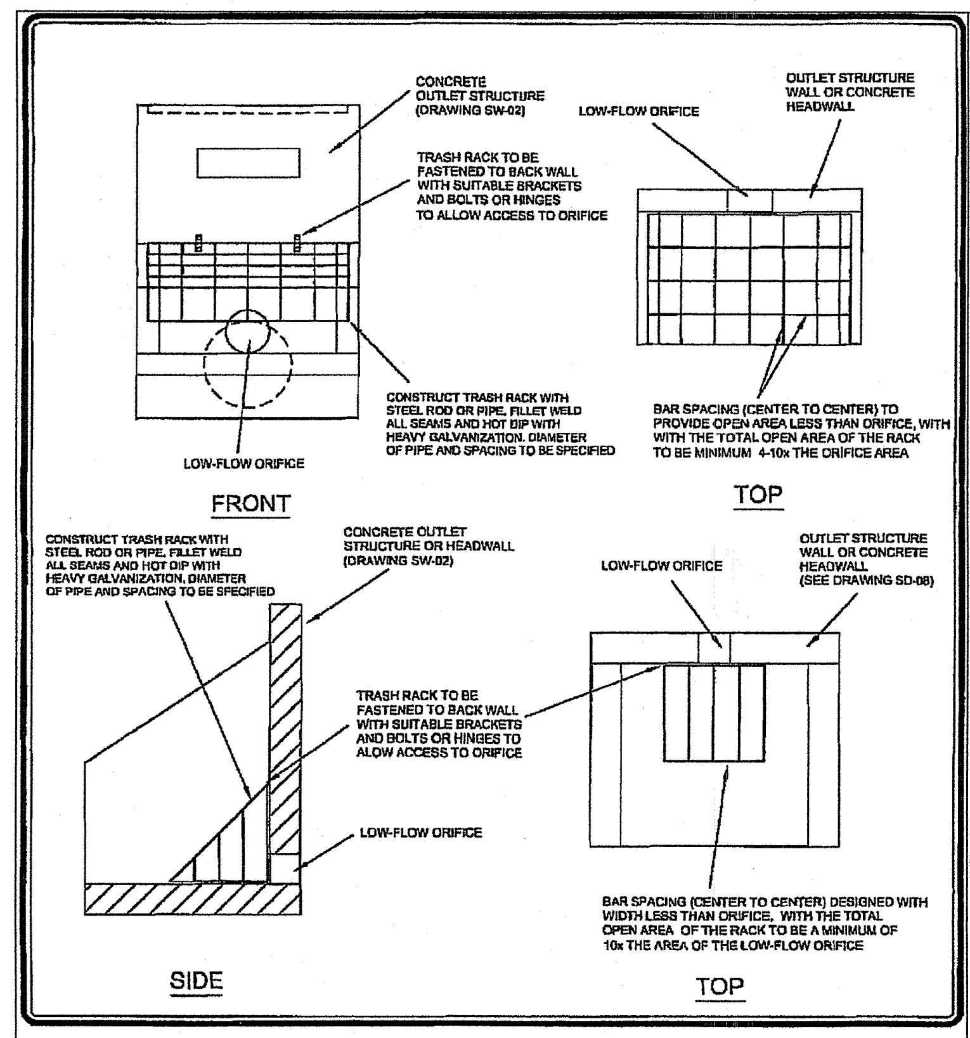
CONCRETE OUTLET STRUCTURE (DRAWING SW-02)
LOW-FLOW ORIFICE
OUTLET STRUCTURE WALL OR CONCRETE HEADWALL
TRASH RACK TO BE FASTENED TO BACK WALL WITH SUITABLE BRACKETS AND BOLTS OR HINGES TO ALLOW ACCESS TO ORIFICE
CONSTRUCT TRASH RACK WITH STEEL ROD OR PIPE, FILLET WELD ALL SEAMS AND HOT DIP WITH HEAVY GALVANIZATION. DIAMETER OF PIPE AND SPACING TO BE SPECIFIED
BAR SPACING (CENTER TO CENTER) TO PROVIDE OPEN AREA LESS THAN ORIFICE, WITH WITH THE TOTAL OPEN AREA OF THE RACK TO BE MINIMUM 4-10x THE ORIFICE AREA
LOW-FLOW ORIFICE
FRONT
TOP
CONSTRUCT TRASH RACK WITH STEEL ROD OR PIPE, FILLET WELD ALL SEAMS AND HOT DIP WITH HEAVY GALVANIZATION, DIAMETER OF PIPE AND SPACING TO BE SPECIFIED
CONCRETE OUTLET STRUCTURE OR HEADWALL (DRAWING SW-02)
LOW-FLOW ORIFICE
OUTLET STRUCTURE WALL OR CONCRETE HEADWALL (SEE DRAWING SD-08)
TRASH RACK TO BE FASTENED TO BACK WALL WITH SUITABLE BRACKETS AND BOLTS OR HINGES TO ALOW ACCESS TO ORIFICE
LOW-FLOW ORIFICE
BAR SPACING (CENTER TO CENTER) DESIGNED WITH WIDTH LESS THAN ORIFICE, WITH THE TOTAL OPEN AREA OF THE RACK TO BE A MINIMUM OF 10x THE AREA OF THE LOW-FLOW ORIFICE
SIDE
TOP

CRANBERRY
TOWNSHIP
TOGETHER TOWARD TOMORROW
2525 Rochester Road Suite 400
Cranberry Township, PA 16066-6499
(724) 776-4806 FAX (724) 776-5488

DETENTION FACILITY LOW-FLOW TRASH RACKS (TYPICAL)

NO.	DATE	NO.	DATE	DRAWING
ORIGINAL	1/14/1999			SS-18
REVISION	MAY 2004			

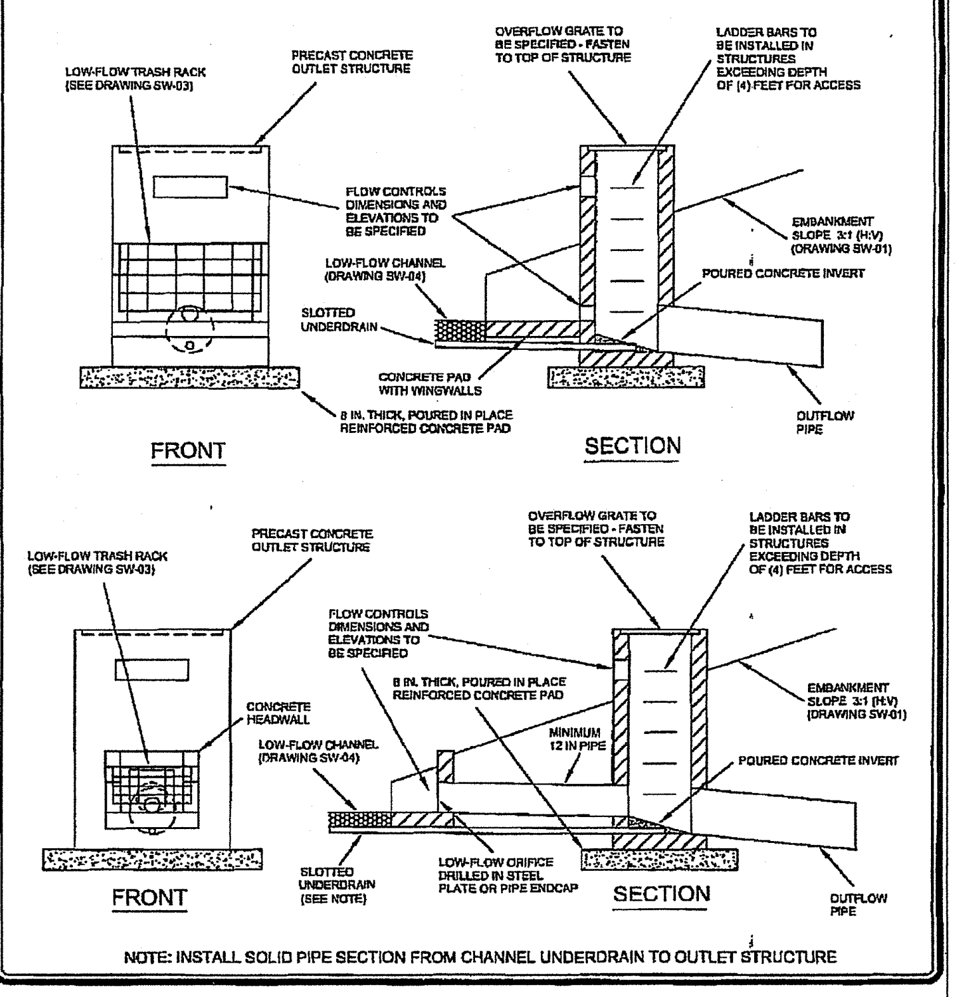
LOW-FLOW TRASH RACK (SEE DRAWING SW-03)
PRECAST CONCRETE OUTLET STRUCTURE
OVERFLOW GRATE TO BE SPECIFIED - FASTEN TO TOP OF STRUCTURE
LADDER BARS TO BE INSTALLED IN STRUCTURES EXCEEDING DEPTH OF (4) FEET FOR ACCESS
FLOW CONTROLS DIMENSIONS AND ELEVATIONS TO BE SPECIFIED
EMBANKMENT SLOPE 3:1 (H:V) (DRAWING SW-01)
LOW-FLOW CHANNEL (DRAWING SW-04)
POURED CONCRETE INVERT
SLOTTED UNDERDRAIN
CONCRETE PAD WITH WINGWALLS
8 IN. THICK, POURED IN PLACE REINFORCED CONCRETE PAD
OUTFLOW PIPE
FRONT
SECTION
LOW-FLOW TRASH RACK (SEE DRAWING SW-03)
PRECAST CONCRETE OUTLET STRUCTURE
OVERFLOW GRATE TO BE SPECIFIED - FASTEN TO TOP OF STRUCTURE
LADDER BARS TO BE INSTALLED IN STRUCTURES EXCEEDING DEPTH OF (4) FEET FOR ACCESS
FLOW CONTROLS DIMENSIONS AND ELEVATIONS TO BE SPECIFIED
8 IN. THICK, POURED IN PLACE REINFORCED CONCRETE PAD
EMBANKMENT SLOPE 3:1 (H:V) (DRAWING SW-01)
CONCRETE HEADWALL
MINIMUM 12 IN PIPE
LOW-FLOW CHANNEL (DRAWING SW-04)
POURED CONCRETE INVERT
SLOTTED UNDERDRAIN (SEE NOTE)
LOW-FLOW ORIFICE DRILLED IN STEEL PLATE OR PIPE ENDCAP
FRONT
SECTION
OUTFLOW PIPE

NOTE: INSTALL SOLID PIPE SECTION FROM CHANNEL UNDERDRAIN TO OUTLET STRUCTURE

CRANBERRY
TOWNSHIP
TOGETHER TOWARD TOMORROW
2525 Rochester Road Suite 400
Cranberry Township, PA 16066-6499
(724) 776-4806 FAX (724) 776-5488

DETENTION FACILITY OUTLET STRUCTURES (TYPICAL)

NO.	DATE	NO.	DATE	DRAWING
ORIGINAL	1/13/1999			SS-17
REVISION	05/29/02			
REVISION	08/14/02			
REVISION	MAY 2004			

PLAN BOOK	PAGE
434	29

HRG
HERBERT, ROWLAND & GRUBIC, INC.
220 WEST KENSINGER DRIVE
SUITE 100
CRANBERRY TOWNSHIP, PA 16066
724.779.4777 | hrg-inc.com

POST CONSTRUCTION STORMWATER MANAGEMENT PLAN
FOR
COMMUNITY PARK NORTH IMPROVEMENTS

CRANBERRY TOWNSHIP
2525 ROCHESTER ROAD
CRANBERRY TOWNSHIP, PENNSYLVANIA 16066

CRANBERRY TOWNSHIP
BUTLER COUNTY
PENNSYLVANIA

PROFESSIONAL SEAL:

ANNA TERESA HATTEN
REGISTRATION NUMBER LA003003

HRG PROJECT NUMBER:	R001261.0555
PLAN DATE:	JUNE 2024
DRAWING SCALE:	AS SHOWN
PROJ. MANAGER:	ATH

REVISIONS

NO.	DATE	DESCRIPTION
1	08.30.2024	REVISED PER BCCD COMMENTS.
2	12.20.2024	REVISED PER PADEP COMMENTS.
3	03.14.2025	REVISED PER BCCD COMMENTS.
4		
5		
6		
7		
8		
9		

SHEET TITLE:
PCSM DETAILS

SHEET: **PCDT-1** **08**

FILE PATH & NAME: P:\0012\001261_0555\C3D\Plan Sets\L001261055SDT-PC.dwg LAYOUT: PC_PCDT-1 LAST PLOTTED: 3/13/2025 4:57 PM BY: JTAI

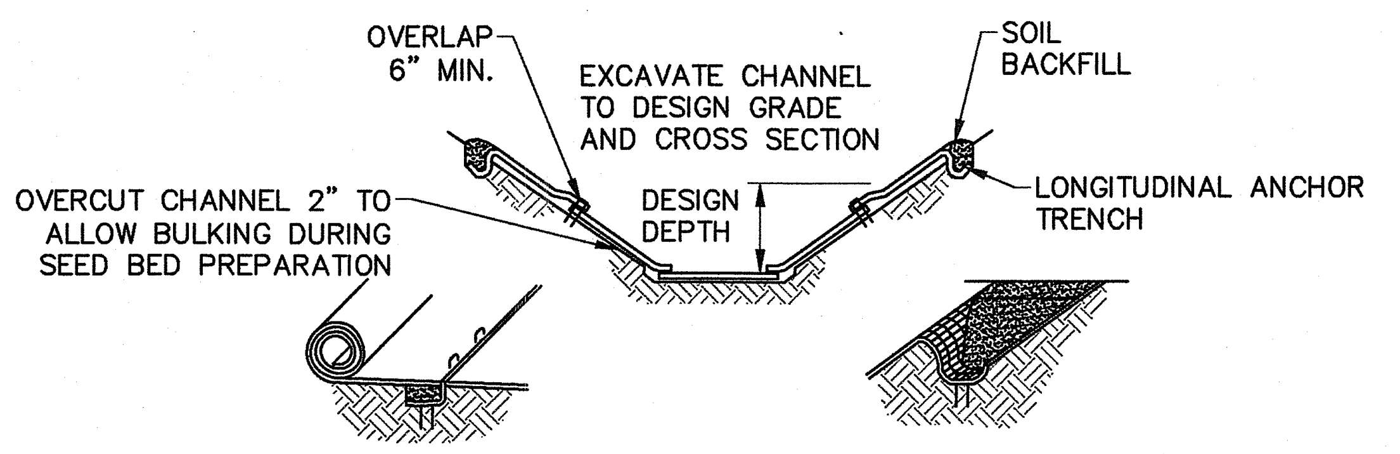
OVERLAP 6" MIN.
EXCAVATE CHANNEL TO DESIGN GRADE AND CROSS SECTION
SOIL BACKFILL
OVERCUT CHANNEL 2" TO ALLOW BULKING DURING SEED BED PREPARATION
DESIGN DEPTH
LONGITUDINAL ANCHOR TRENCH

INTERMITTENT CHECK SLOT

LONGITUDINAL ANCHOR TRENCH

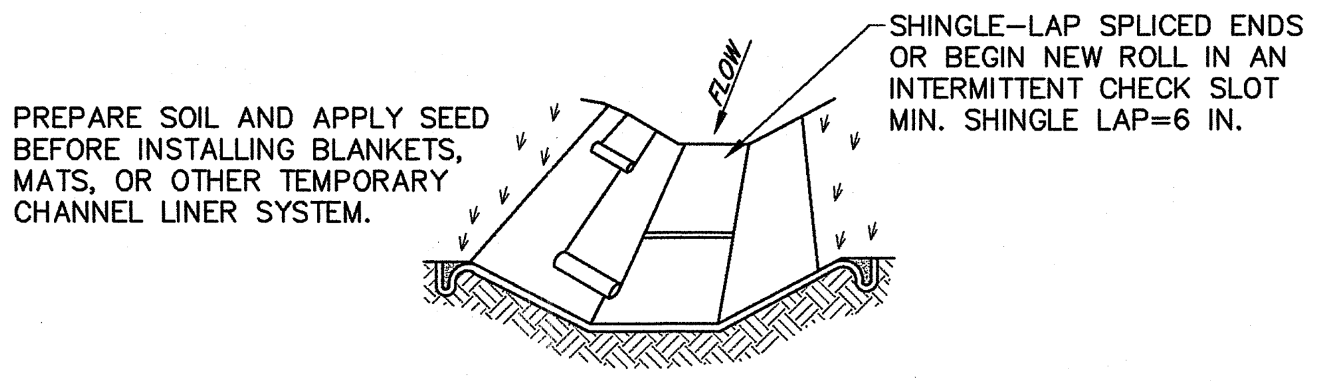
SHINGLE-LAP SPLICED ENDS OR BEGIN NEW ROLL IN AN INTERMITTENT CHECK SLOT MIN. SHINGLE LAP=6 IN.
PREPARE SOIL AND APPLY SEED BEFORE INSTALLING BLANKETS, MATS, OR OTHER TEMPORARY CHANNEL LINER SYSTEM.
FLOW

ISOMETRIC VIEW

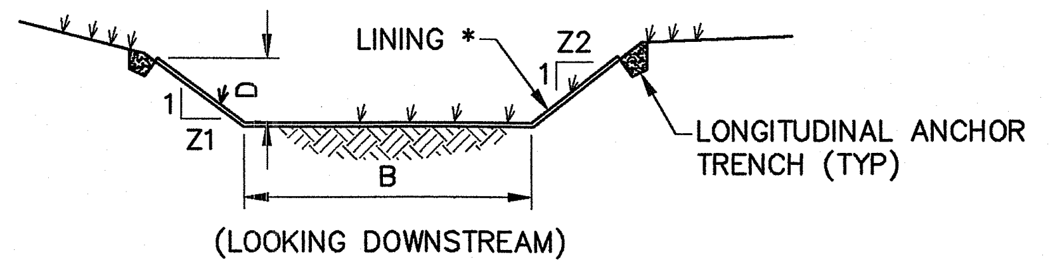
LINING *
Z2
1
D
Z1
B
LONGITUDINAL ANCHOR TRENCH (TYP)
(LOOKING DOWNSTREAM)

CHANNEL CROSS-SECTION

* SEE MANUFACTURER'S LINING INSTALLATION DETAIL FOR STAPLE PATTERNS, VEGETATIVE STABILIZATION SPECIFICATIONS FOR SOIL AMENDMENTS, SEED MIXTURES AND MULCHING INFORMATION

CHANNEL NO.	STATIONING	BOTTOM WIDTH B (FT)	DEPTH D (FT)	TOP WIDTH W (FT)	Z1 (FT)	Z2 (FT)	LINING *
1	ALL	2	2.0	14.0	3	3	N.A.G. S75
2	ALL	2	2.0	14.0	3	3	N.A.G. S75
3	ALL	4	2.0	16.0	3	3	N.A.G. SC250
4	ALL	4	2.0	16.0	3	3	N.A.G. S75

NOTES:

1. ANCHOR TRENCHES SHALL BE INSTALLED AT BEGINNING AND END OF CHANNEL IN THE SAME MANNER AS LONGITUDINAL ANCHOR TRENCHES.
2. CHANNEL DIMENSIONS SHALL BE CONSTANTLY MAINTAINED. CHANNEL SHALL BE CLEANED WHENEVER TOTAL CHANNEL DEPTH IS REDUCED BY 25% AT ANY LOCATION. SEDIMENT DEPOSITS SHALL BE REMOVED WITHIN 24 HOURS OF DISCOVERY OR AS SOON AS SOIL CONDITIONS PERMIT ACCESS TO CHANNEL WITHOUT FURTHER DAMAGE. DAMAGED LINING SHALL BE REPAIRED OR REPLACED WITHIN 48 HOURS OF DISCOVERY.
3. NO MORE THAN ONE THIRD OF THE SHOOT (GRASS LEAF) SHALL BE REMOVED IN ANY MOWING. GRASS HEIGHT SHALL BE MAINTAINED BETWEEN 2 AND 3 INCHES UNLESS OTHERWISE SPECIFIED. EXCESS VEGETATION SHALL BE REMOVED FROM PERMANENT CHANNELS TO ENSURE SUFFICIENT CHANNEL CAPACITY.

STANDARD CONSTRUCTION DETAIL #6-1 VEGETATED CHANNEL

NOT TO SCALE

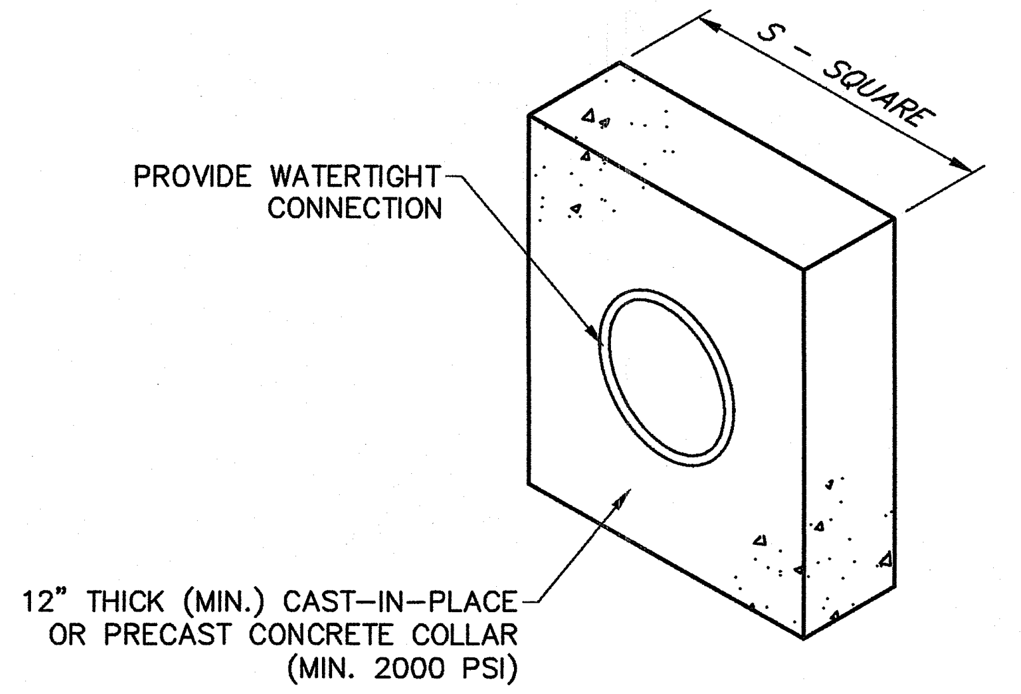
S – SQUARE
PROVIDE WATERTIGHT CONNECTION
12" THICK (MIN.) CAST-IN-PLACE OR PRECAST CONCRETE COLLAR (MIN. 2000 PSI)

BASIN OR TRAP NO.	PIPE SIZE (IN)	S (FT)	NO. OF COLLARS	TO FIRST COLLAR (FT)	COLLAR SPACING (FT)
1	15	5.5	3	5	15
30" PIPE	30	7	6	–	100

NOTES:

1. ALL COLLARS SHALL BE INSTALLED SO AS TO BE WATERTIGHT.
2. COLLAR SIZE AND SPACING SHALL BE AS INDICATED WITHIN TABLE.

STANDARD CONSTRUCTION DETAIL #7-16 CONCRETE ANTI-SEEP COLLAR FOR PERMANENT BASINS OR TRAPS

NOT TO SCALE

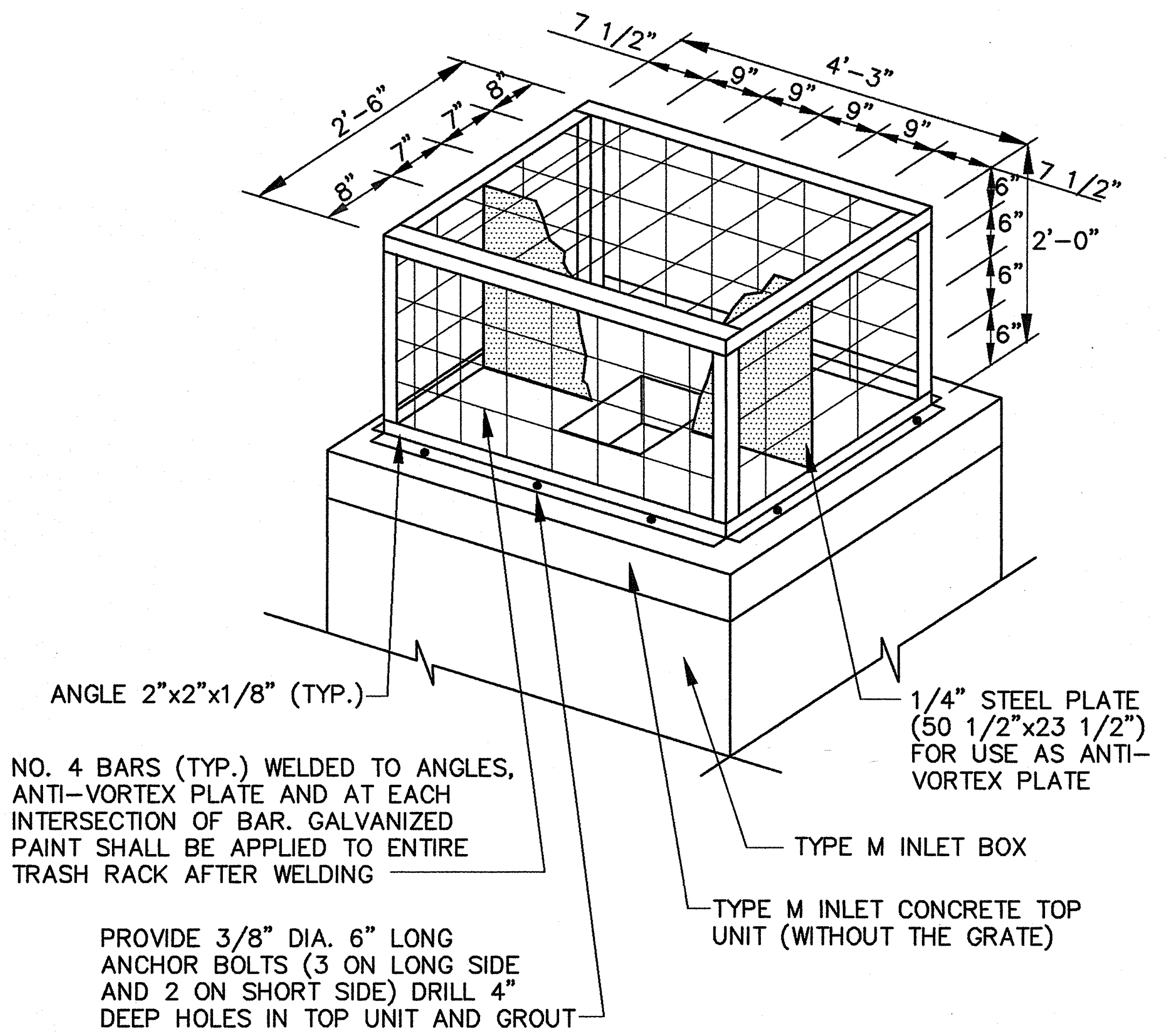
7 1/2"
4'-3"
9"
9"
9"
9"
7 1/2"
2'-6"
8"
7"
7"
8"
6"
6"
6"
6"
2'-0"
ANGLE 2"x2"x1/8" (TYP.)
NO. 4 BARS (TYP.) WELDED TO ANGLES, ANTI-VORTEX PLATE AND AT EACH INTERSECTION OF BAR. GALVANIZED PAINT SHALL BE APPLIED TO ENTIRE TRASH RACK AFTER WELDING
PROVIDE 3/8" DIA. 6" LONG ANCHOR BOLTS (3 ON LONG SIDE AND 2 ON SHORT SIDE) DRILL 4" DEEP HOLES IN TOP UNIT AND GROUT
1/4" STEEL PLATE (50 1/2"x23 1/2") FOR USE AS ANTI-VORTEX PLATE
TYPE M INLET BOX
TYPE M INLET CONCRETE TOP UNIT (WITHOUT THE GRATE)

OVERFLOW TRASH RACK WITH ANTI-VORTEX PLATE

NOT TO SCALE

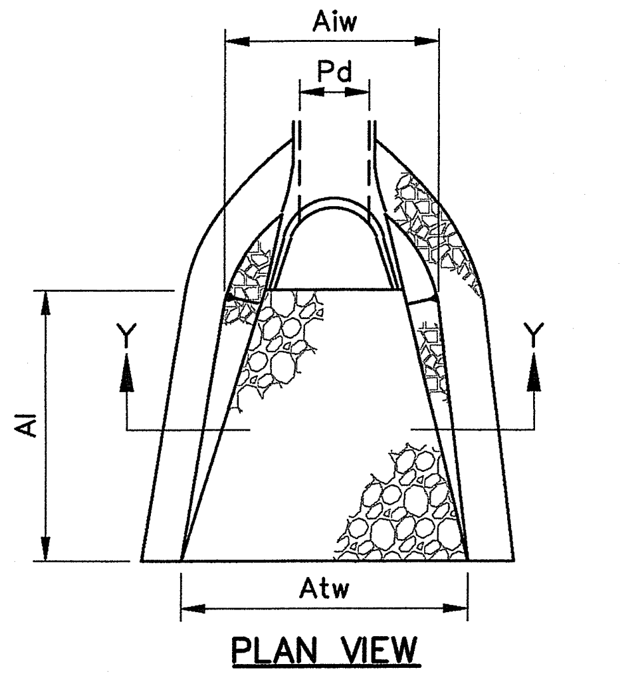
Aiw
Pd
Y
Y
Al
Atw

PLAN VIEW

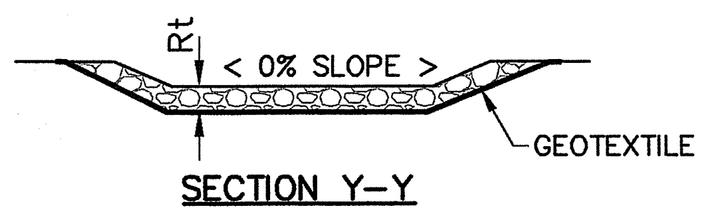
Rt
< 0% SLOPE >
GEOTEXTILE

SECTION Y-Y

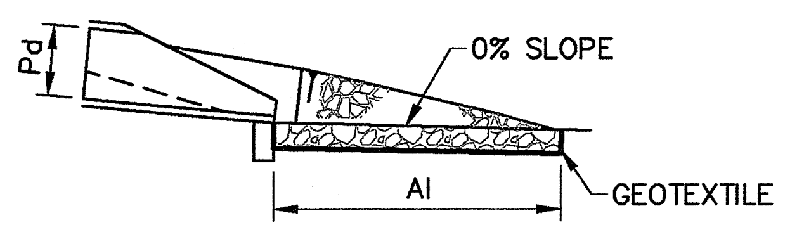
Pd
0% SLOPE
Al
GEOTEXTILE

ELEVATION VIEW

OUTLET NO.	PIPE DIA Pd (IN)	RIPRAP SIZE R-_	RIPRAP THICK. Rt (IN)	APRON LENGTH Al (FT)	APRON INITIAL WIDTH Aiw (FT)	APRON TERMINAL WIDTH Atw (FT)
RA-1*	24	5	27	25	4	4
RA-2	15	4	18	12	4	16
RA-3	36	5	27	20	9	29
RA-4*	–	5	27	28	4	8

*RIPRAP LINED WITHIN SWALE

NOTES:

ALL APRONS SHALL BE CONSTRUCTED TO THE DIMENSIONS SHOWN. TERMINAL WIDTHS SHALL BE ADJUSTED AS NECESSARY TO MATCH RECEIVING CHANNELS.

ALL APRONS SHALL BE INSPECTED AT LEAST WEEKLY AND AFTER EACH RUNOFF EVENT. DISPLACED RIPRAP WITHIN THE APRON SHALL BE REPLACED IMMEDIATELY.

STANDARD CONSTRUCTION DETAIL #9-1 RIPRAP APRON AT PIPE OUTLET WITH FLARED END SECTION OR ENDWALL

NOT TO SCALE

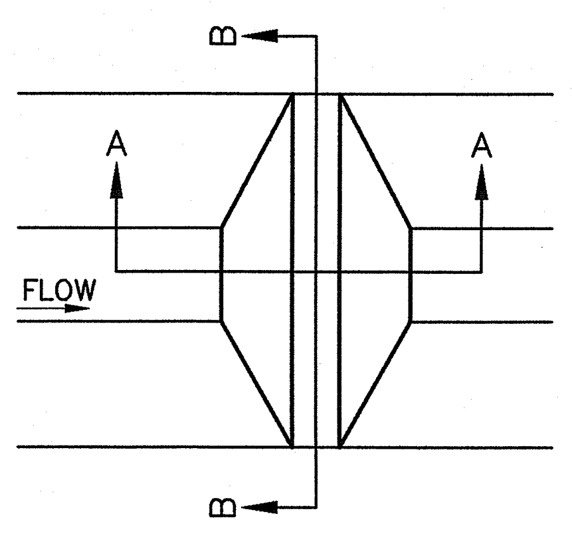

PLAN VIEW

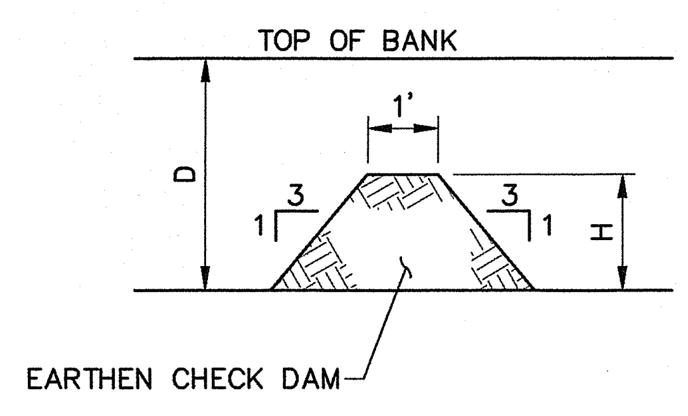
TOP OF BANK
1'
D
3
1
3
1
H
EARTHEN CHECK DAM

SECTION A-A

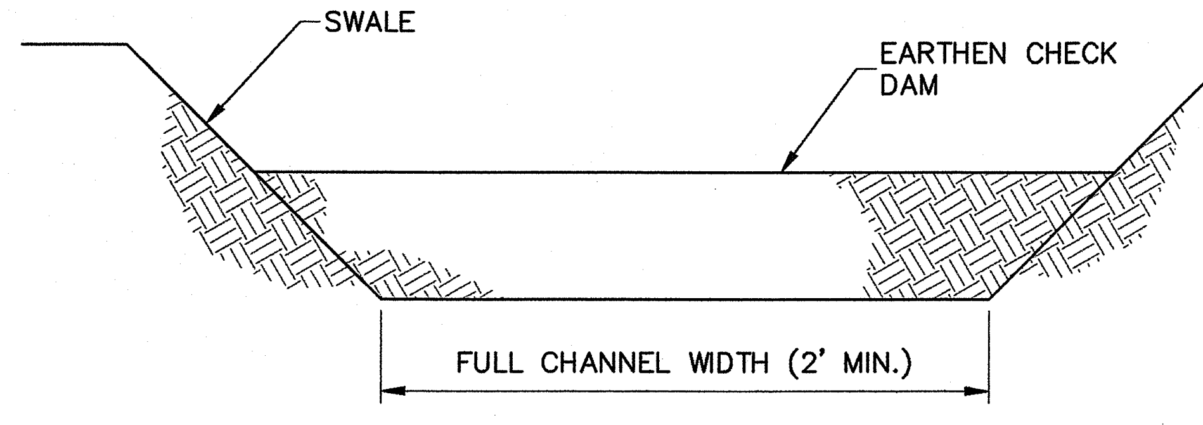
SWALE
EARTHEN CHECK DAM
FULL CHANNEL WIDTH (2' MIN.)

SECTION B-B

CHECK DAM NO.	LOCATION	D (FT)	H (FT)
ALL	SWALE 1	2	1
ALL	SWALE 2	2	0.5

EARTHEN CHECK DAM

NOT TO SCALE

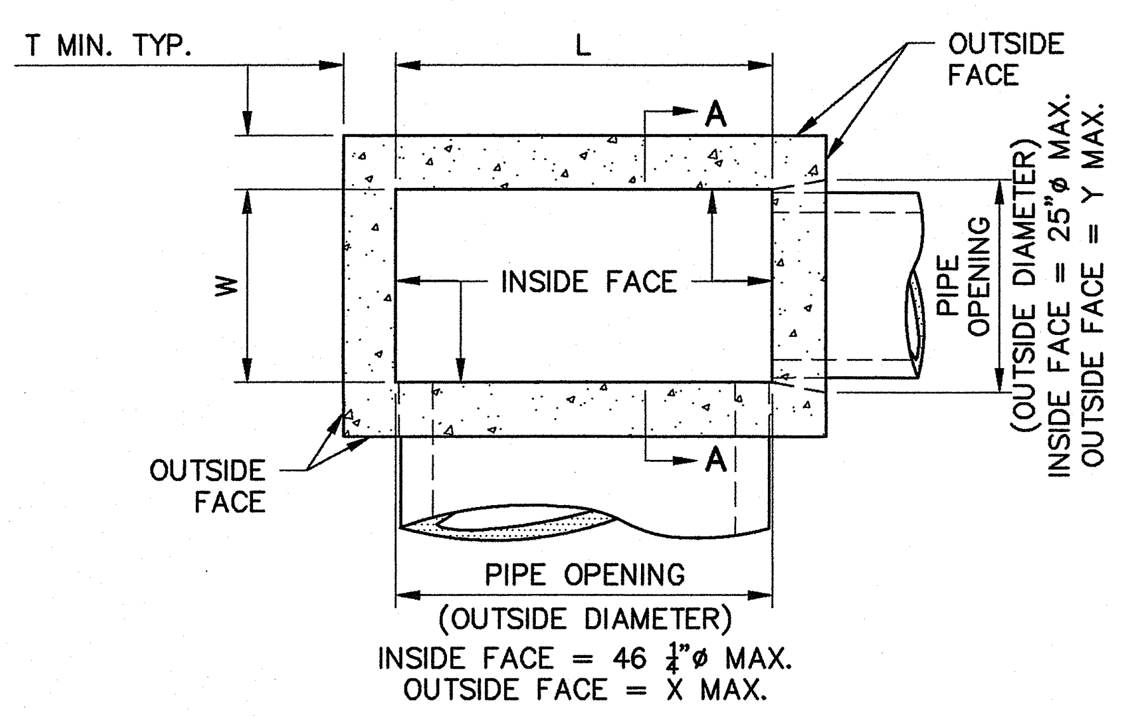
T MIN. TYP.
L
A
A
OUTSIDE FACE
W
INSIDE FACE
PIPE OPENING (OUTSIDE DIAMETER)
INSIDE FACE = 25"ø MAX.
OUTSIDE FACE = Y MAX.
OUTSIDE FACE
PIPE OPENING (OUTSIDE DIAMETER)
INSIDE FACE = 46 1/4"ø MAX.
OUTSIDE FACE = X MAX.

PLAN (STANDARD BOX)

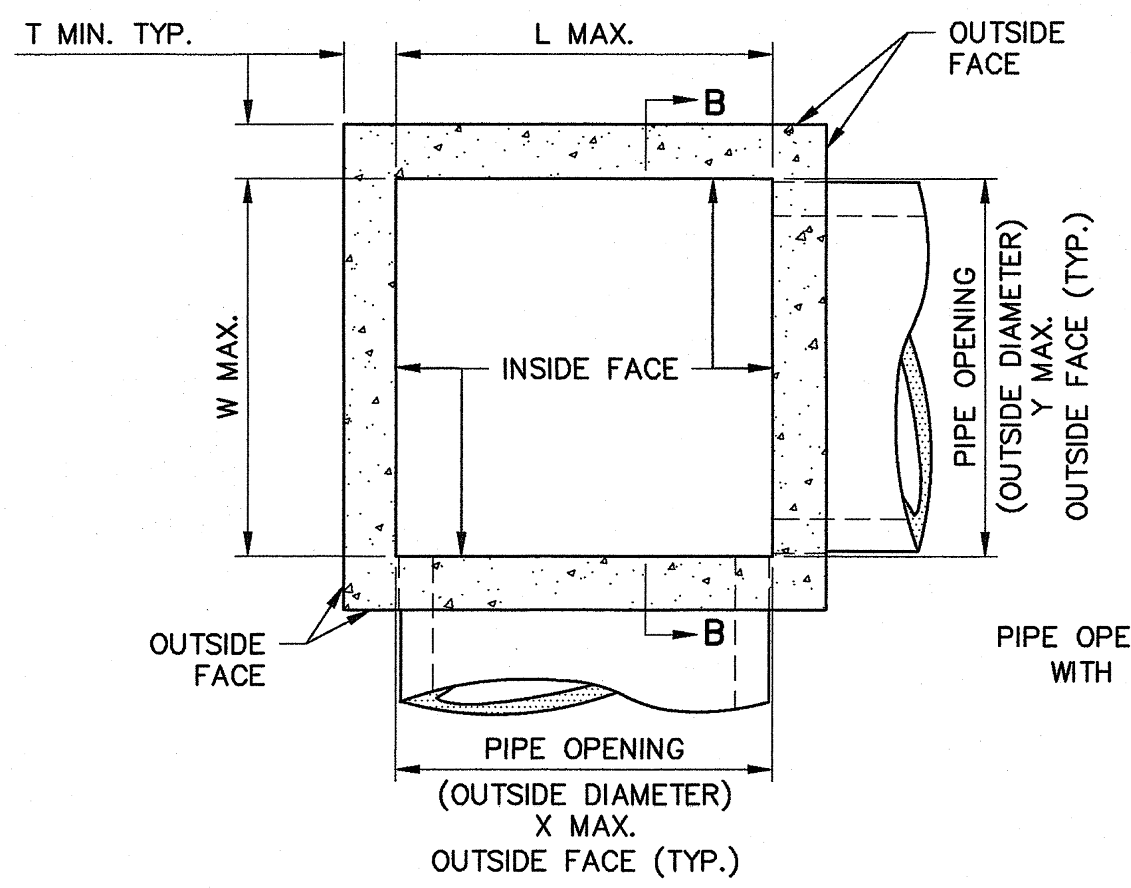
T MIN. TYP.
L MAX.
B
B
OUTSIDE FACE
W MAX.
INSIDE FACE
PIPE OPENING (OUTSIDE DIAMETER) Y MAX. OUTSIDE FACE (TYP.)
OUTSIDE FACE
PIPE OPENING (OUTSIDE DIAMETER) X MAX. OUTSIDE FACE (TYP.)

PLAN (TYPE 4 THROUGH TYPE 10 AND TYPE D-H BOXES)

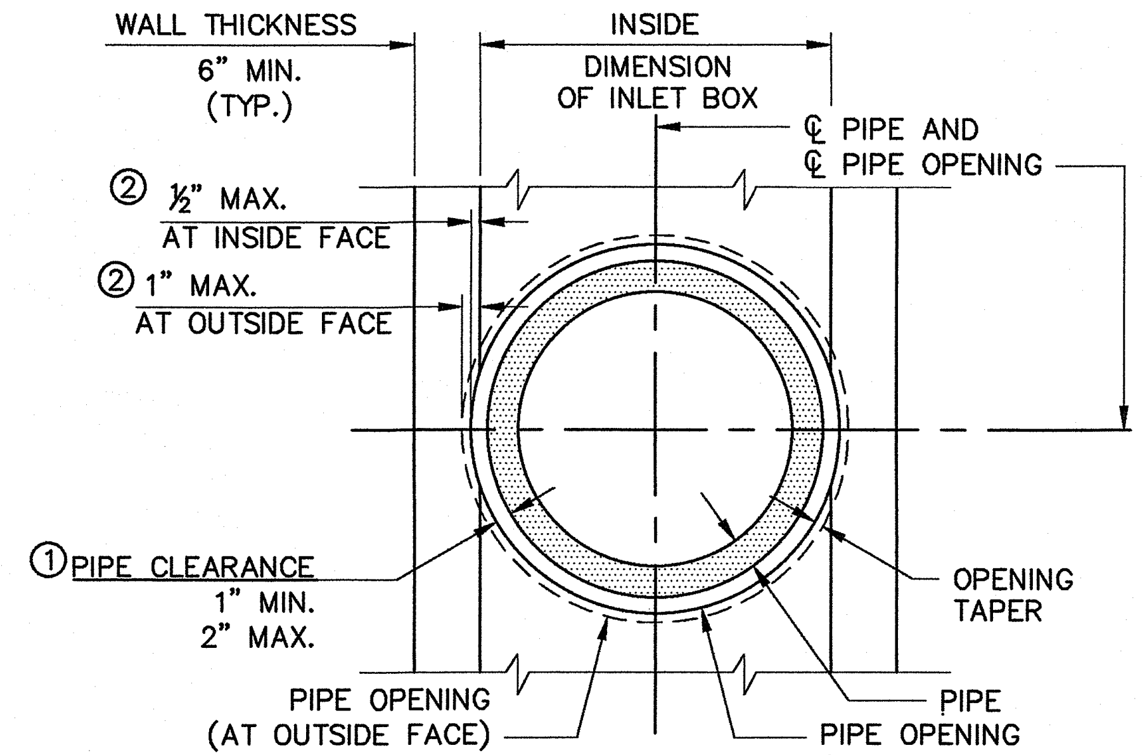
WALL THICKNESS 6" MIN. (TYP.)
INSIDE DIMENSION OF INLET BOX
℄ PIPE AND ℄ PIPE OPENING
② ½" MAX. AT INSIDE FACE
② 1" MAX. AT OUTSIDE FACE
① PIPE CLEARANCE 1" MIN. 2" MAX.
OPENING TAPER
PIPE OPENING (AT OUTSIDE FACE)
PIPE
PIPE OPENING (AT INSIDE FACE)

SECTION A-A (STANDARD INLET BOX ONLY)

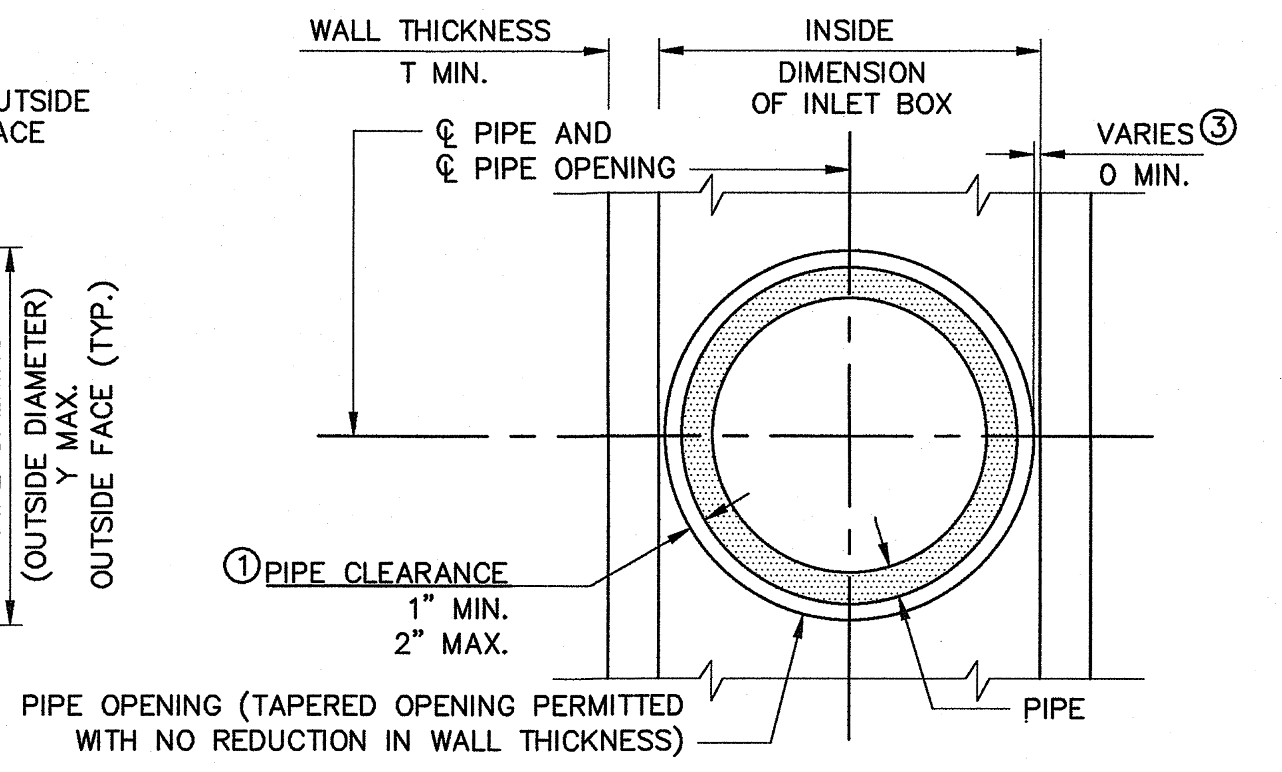
WALL THICKNESS T MIN.
INSIDE DIMENSION OF INLET BOX
℄ PIPE AND ℄ PIPE OPENING
VARIES ③ 0 MIN.
① PIPE CLEARANCE 1" MIN. 2" MAX.
PIPE OPENING (TAPERED OPENING PERMITTED WITH NO REDUCTION IN WALL THICKNESS)
PIPE

SECTION B-B (TYPICAL ALL TYPES EXCEPT STANDARD)

LEGEND

① OUTSIDE DIAMETER OF PIPE TO PIPE OPENING
② REDUCTION IN WALL THICKNESS DIMENSION
③ INSIDE FACE OF BOX WALL TO OUTSIDE DIAMETER OF PIPE OPENING

BOX TYPE	INSIDE BOX DIMENSIONS W	INSIDE BOX DIMENSIONS L	WALL THICKNESS T	PIPE OPENING AT OUTSIDE FACE X	PIPE OPENING AT OUTSIDE FACE Y
STANDARD	2'–0"	3'–9¼"	6"	47¼"	26"
TYPE 4	4'–0"	4'–0"	6"	48"	48"
TYPE 5	5'–0"	5'–0"	6"	60"	60"
TYPE 6	6'–0"	6'–0"	6"	72"	72"
TYPE 7	7'–0"	7'–0"	8"	84"	84"
TYPE 8	8'–0"	8'–0"	8"	96"	96"
TYPE 9	9'–0"	9'–0"	8"	108"	108"
TYPE 10	10'–0"	10'–0"	8"	120"	120"
TYPE D–H	2'–6"	8'–3"	6"	99"	30"

NOTES

1. CONSTRUCT INLET BOXES IN ACCORDANCE WITH THE REQUIREMENTS OF PADOT PUB. 408, SECTION 714 AND PUB. 72M, RC–43M.
2. PERMIT ONLY PRECAST INLET BOXES SUPPLIED BY A MANUFACTURER LISTED IN PADOT BULLETIN 15. USE CLASS AA CEMENT CONCRETE FOR PRECAST BOXES.
3. SEE PADOT PUB 72M, RC–43M FOR CONCRETE TOP UNITS, TRANSITION SLABS, RISER SECTIONS AND GRADE ADJUSTMENT RINGS.
4. PROVIDE 2" DIAMETER WEEPHOLES IN THE WALLS WHEN THE DEPTH BETWEEN THE FINISHED GRADE ELEVATION AND THE TOP OF THE SLAB ELEVATION IS GREATER THAN (10'–0").
   - VERTICAL PLACEMENT: 5'–0" MAXIMUM SPACING
   - HORIZONTAL PLACEMENT: PLACE WEEPHOLES IN THE SIDE WALLS THAT ARE PERPENDICULAR TO TRAFFIC.
   - LOCATE WEEPHOLES A MINIMUM OF 6" FROM PIPE OPENING OR JOINTS.
   - LOCATE WEEPHOLES A MINIMUM OF 1'–0" ABOVE OUTLET PIPE INVERT.
5. LOCATE PIPE OR PIPES, AS INDICATED, WITH THE INLET BOTTOM SHAPED TO CHANNEL THE FLOW TOWARD THE OUTLET PIPE. WHEN PROJECT CONDITIONS REQUIRE PIPE BLOCKOUTS TO BE FORMED WITHIN 4" FROM THE TOP OF THE INLET BOX, PROVIDE AN ADDITIONAL #3 REINFOREMENT BAR LOCATED 1 5/8" FROM THE TOP OF THE INLET BASE, FULL WIDTH ALONG THE INLET FACE. REMOVE ANY VISIBLE PORTION OF THE BAR, IF REQUIRED DURING INSTALLATION AND PRIOR TO JOINING THE PIPE TO THE INLET. IF REINFORCED CONCRETE PIPE IS USED, THE PIPE BLOCKOUT MAY BE FORMED 'FLUSH' WITH THE INLET BASE. LIMIT PIPE BLOCKOUT OF WALL TO 1".
6. PLACE SUBBASE MATERIAL MEETING THE REQUIREMENTS OF PADOT PUB. 408, SECTION 350.2, TO A DEPTH OF 12", IN LAYERS 4" THICK, COMPACTED TO A DENSITY SATISFACTORY TO THE ENGINEER.
7. PROVIDE SUITABLE LIFTING DEVICES FOR HANDLING AND INSTALLATION. GALVANIZE METAL DEVICES AS SPECIFIED IN PADOT PUB. 408 SECTION 1105.
8. PROVIDE MANHOLE STEPS WHEN THE DEPTH BETWEEN THE FINISHED GRADE ELEVATION AND THE TOP OF THE BOTTOM SLAB ELEVATION IS GREATER THAN 5'–0". SHALLOW RECESSES, ON THE INSIDE FACE OF THE INLET, NOT GREATER THAN 3/8" IN DEPTH, FORMED BY MAGNETIC STEP FORMERS ARE ACCEPTABLE AND DO NOT REQUIRE PATCHING. FOR DETAILS, REFER TO RC–39M.

PRECAST INLET BOXES

NOT TO SCALE

PLAN BOOK	PAGE
434	30

HRG
HERBERT, ROWLAND & GRUBIC, INC.
220 WEST KENSINGER DRIVE
SUITE 100
CRANBERRY TOWNSHIP, PA 16066
724.779.4777 | hrg-inc.com

POST CONSTRUCTION STORMWATER MANAGEMENT PLAN
FOR
COMMUNITY PARK NORTH IMPROVEMENTS

CRANBERRY TOWNSHIP
2525 ROCHESTER ROAD
CRANBERRY TOWNSHIP, PENNSYLVANIA 16066

CRANBERRY TOWNSHIP
BUTLER COUNTY
PENNSYLVANIA

PROFESSIONAL SEAL:
ANNA TERESA HATTEN
REGISTRATION NUMBER LA003003

HRG PROJECT NUMBER: R001261.0555
PLAN DATE: JUNE 2024
DRAWING SCALE: AS SHOWN
PROJ. MANAGER: ATH

REVISIONS

NO.	DATE	DESCRIPTION
1	08.30.2024	REVISED PER BCCD COMMENTS.
2	12.20.2024	REVISED PER PADEP COMMENTS.
3	03.14.2025	REVISED PER BCCD COMMENTS.
4		
5		
6		
7		
8		
9		

SHEET TITLE:
PCSM DETAILS

SHEET: PCDT-2
09

FILE PATH & NAME: P:\0012\001261_0555\C3D\Plan Sets\L001261055SDT-PC.dwg LAYOUT:PC_PCDT-2 LAST PLOTTED: 3/13/2025 4:57 PM BY:JTAI

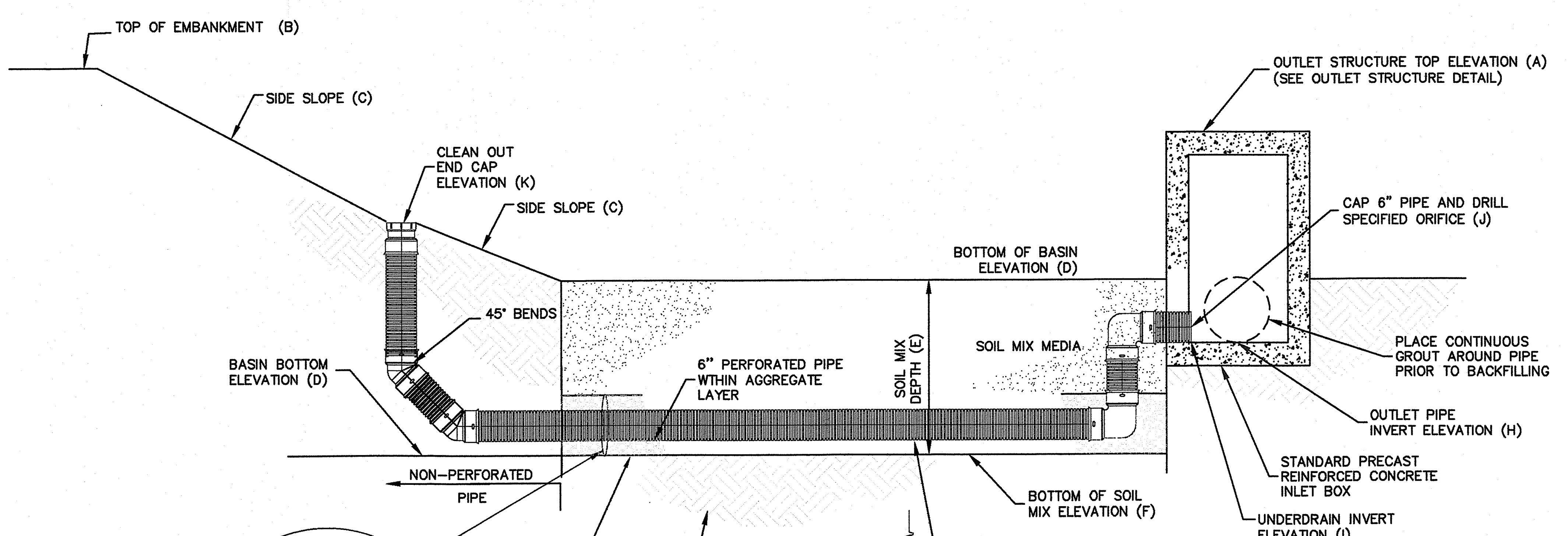
TOP OF EMBANKMENT (B)
SIDE SLOPE (C)
CLEAN OUT END CAP ELEVATION (K)
SIDE SLOPE (C)
45° BENDS
BASIN BOTTOM ELEVATION (D)
NON-PERFORATED PIPE
6" PERFORATED PIPE WITHIN AGGREGATE LAYER
BOTTOM OF BASIN ELEVATION (D)
SOIL MIX MEDIA
SOIL MIX DEPTH (E)
OUTLET STRUCTURE TOP ELEVATION (A) (SEE OUTLET STRUCTURE DETAIL)
CAP 6" PIPE AND DRILL SPECIFIED ORIFICE (J)
PLACE CONTINUOUS GROUT AROUND PIPE PRIOR TO BACKFILLING
OUTLET PIPE INVERT ELEVATION (H)
STANDARD PRECAST REINFORCED CONCRETE INLET BOX
UNDERDRAIN INVERT ELEVATION (I)
BOTTOM OF SOIL MIX ELEVATION (F)
PERFORATED PIPE UNDERDRAIN ELEVATION (G)
IN SITU SOILS (DO NOT COMPACT)
COARSE NO.57 AGGREGATE

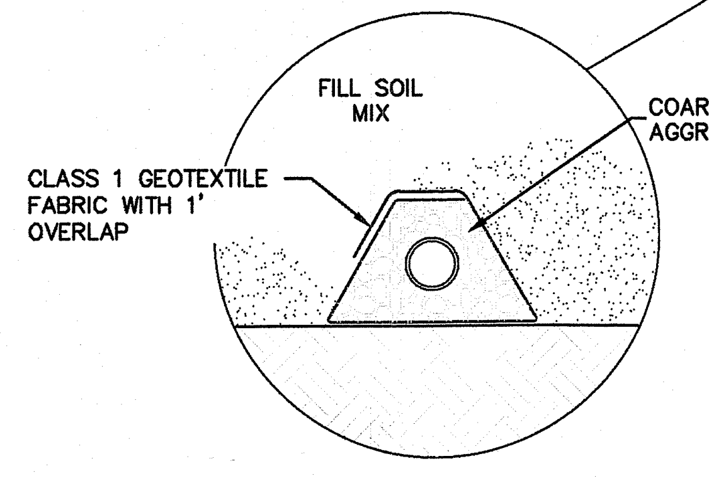
FILL SOIL MIX
CLASS 1 GEOTEXTILE FABRIC WITH 1' OVERLAP

UNDERDRAIN PIPE BEDDING

NOTES:

1. CONSTRUCT ONLY AFTER UPSTREAM AREAS HAVE BEEN PERMANENTLY STABILIZED OR DIVERT RUNOFF DURING CONSTRUCTION.
2. EXCAVATE TO PROPOSED INVERT ELEVATION AND SCARIFY EXISTING SOILS, DO NOT COMPACT IN-SITU SOILS.
3. INSTALL OVERFLOW (IF NOT ALREADY INSTALLED) UNDERDRAIN, BEDDING AND GEOTEXTILE FABRIC.
4. INSTALL AMENDED SOIL MIX AS SPECIFIED BELOW. LIGHT HAND TAMPING IS ACCEPTABLE. OVERFILL AS REQUIRED TO ACCOUNT FOR SETTLEMENT. SOIL MEDIA SHALL HAVE A CLAY CONTENT OF LESS THAN 10%.
   - 4.1. AMENDED SOIL MEDIA SHALL CONSIST OF 20% COMPOST, 40% SAND AND 40% TOPSOIL.
   - 4.2. SPREAD SOIL MIX IN A LAYER NO THICKER THAN 6 INCHES AND TILL THE MIXTURE WITH A ROTARY TILLER THAT IS SET TO A DEPTH OF 6 INCHES. FOR THE FIRST LAYER ABOVE THE UDNERDRAIN, THE ROTARY TILLER SHALL BE SET TO A DEPTH OF 3–4 INCHES TO AVOID DAMAGING THE GEOTEXTILE FABRIC. REPEAT THE PROCESS UNTIL ACHIEVE DESIRED ELEVATION.
5. COMPLETE FINAL GRADING, PLANT VEGETATION AND MULCH. PRESOAK PRIOR TO PLANTING
6. BASINS TO BE SEEDED WITH ERNMX 180
7. REFER TO GRADING PLAN AND LANDSCAPING PLAN FOR BASIN FACILITY SIZE, LOCATION, AND CONFIGURATION.
8. REFER TO POST CONSTRUCTION STORMWATER MANAGEMENT REPORT FOR DESIGN CALCULATIONS.

BASIN NUMBER	TOP GRATE ELEVATION (A)	TOP OF EMBANKMENT (FT.) (B)	SIDE SLOPE (C)	BOTTOM OF BASIN ELEVATION (FT.) (D)	SOIL MIX DEPTH (FT.) (E)	BOTTOM OF SOIL MIX ELEVATION (FT.) (F)	UNDERDRAIN INVERT ELEVATION (FT.) (G)	OUTLET PIPE INVERT ELEVATION (FT.) (H)	OUTLET STRUCTURE DIMENSIONS (FT.)	MRC ORIFICE ELEVATION (FT.) (I)	MRC ORIFICE SIZE (INCHES) (J)	NUMBER OF MRC ORIFICE	CLEAN OUT END CAP ELEVATION (K)
1 (BMP ID: 001)	1122.00	1125.00	3:1	1120.00	3.0	1117.00	1117.00	1113.85	2X4	1118.00	1.0	1	1123.00

ABOVE GROUND DETENTION BASIN - MRC W/ PERFORATED UNDERDRAIN

NOT TO SCALE

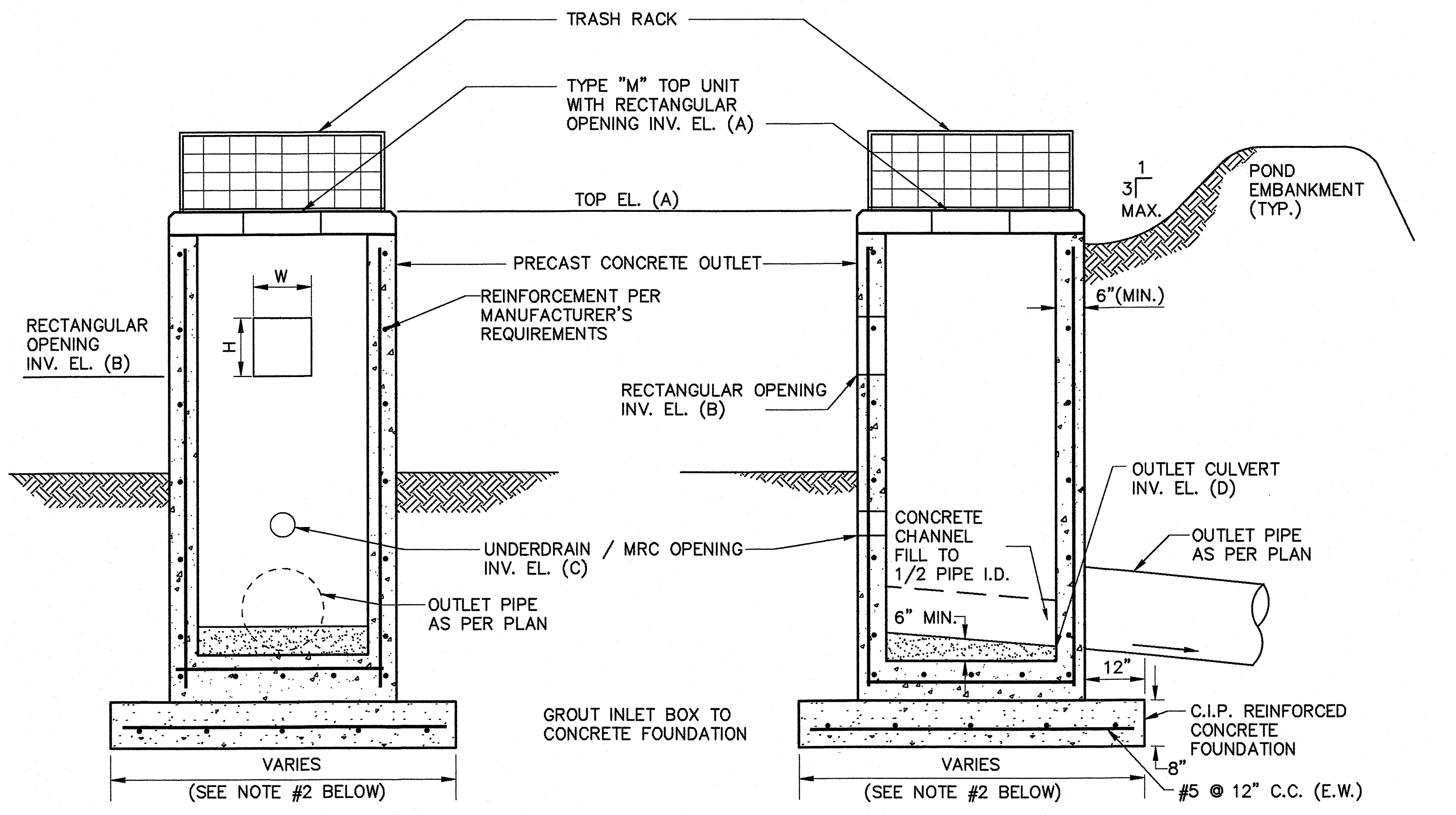
TRASH RACK
TYPE "M" TOP UNIT WITH RECTANGULAR OPENING INV. EL. (A)
TOP EL. (A)
PRECAST CONCRETE OUTLET
REINFORCEMENT PER MANUFACTURER'S REQUIREMENTS
RECTANGULAR OPENING INV. EL. (B)
W
H
RECTANGULAR OPENING INV. EL. (B)
UNDERDRAIN / MRC OPENING INV. EL. (C)
OUTLET PIPE AS PER PLAN
1
3
MAX.
POND EMBANKMENT (TYP.)
6"(MIN.)
OUTLET CULVERT INV. EL. (D)
CONCRETE CHANNEL FILL TO 1/2 PIPE I.D.
6" MIN.
OUTLET PIPE AS PER PLAN
12"
GROUT INLET BOX TO CONCRETE FOUNDATION
C.I.P. REINFORCED CONCRETE FOUNDATION
8"
VARIES
(SEE NOTE #2 BELOW)
VARIES
(SEE NOTE #2 BELOW)
#5 @ 12" C.C. (E.W.)

FRONT ELEVATION

SIDE ELEVATION

NOTES:

1. PROVIDE FIELD PLACED CONCRETE FILL IN THE BOTTOM OF ALL OUTLET STRUCTURES TO A DEPTH OF 1/2 OF THE PIPE I.D. PROVIDE AN ADEQUATE FLOW CHANNEL FOR THE TRANSITION TO THE OUTLET PIPE. SHAPE BOX BOTTOM FOR POSITIVE DRAINAGE.
2. CONSTRUCT THE REINFORCED CONCRETE FOUNDATION TO A DIMENSION 24" LARGER THAN THE OUTSIDE DIMENSIONS OF THE OUTLET STRUCTURE.
3. CONSTRUCT OUTLET STRUCTURE IN ACCORDANCE WITH PENNDOT PUBLICATION 72, RC–34 FOR PRECAST CONCRETE INLET BOXES.
4. INSTALL MANHOLE STEPS IN REQUIRED OUTLET STRUCTURES AS REQUIRED. SEE COPOLYMER POLYPROPYLENE PLASTIC MANHOLE STEP DETAIL.

BASIN NO.	TOP ELEVATION / INVERT (A)	TOP GRATE OPENING (INCHES)	REC. OPENING INVERT (B)	WIDTH W (INCHES)	HEIGHT H (INCHES)	UNDERDRAIN / MRC OPENING INVERT (C)	UNDERDRAIN SIZE (INCHES)	OUTLET PIPE DIA. (INCHES)	OUTLET INVERT (D)
1 (ST.OCS–A.2)	1122.00	7 X 7	1120.50	12	10	1118.00	6	15	1113.85

ABOVE GROUND DETENTION BASIN - MRC (BMP ID: 001) OUTLET STRUCTURE DETAIL

NOT TO SCALE

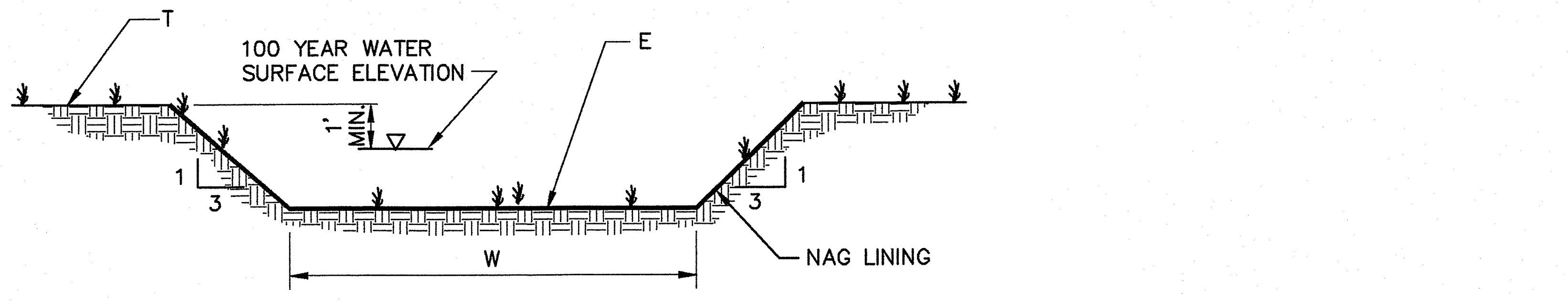
T
100 YEAR WATER SURFACE ELEVATION
1' MIN.
E
1
3
1
3
W
NAG LINING

BASIN NO.	WIDTH W	TOP BERM EL. T	SPILLWAY EL. E	LINING
1	25'	1125.00	1123.50	N.A.G. P550

EMERGENCY SPILLWAY

NOT TO SCALE

PLAN BOOK	PAGE
434	31

HERBERT, ROWLAND & GRUBIC, INC.
220 WEST KENSINGER DRIVE
SUITE 100
CRANBERRY TOWNSHIP, PA 16066
724.779.4777 | hrg-inc.com

POST CONSTRUCTION STORMWATER MANAGEMENT PLAN
FOR
COMMUNITY PARK NORTH IMPROVEMENTS

CRANBERRY TOWNSHIP
2525 ROCHESTER ROAD
CRANBERRY TOWNSHIP, PENNSYLVANIA 16066

CRANBERRY TOWNSHIP
BUTLER COUNTY
PENNSYLVANIA

PROFESSIONAL SEAL:

LA003003

HRG PROJECT NUMBER:	R001261.0555
PLAN DATE:	JUNE 2024
DRAWING SCALE:	AS SHOWN
PROJ. MANAGER:	ATH

REVISIONS

NO.	DATE	DESCRIPTION
1	08.30.2024	REVISED PER BCCD COMMENTS.
2	12.20.2024	REVISED PER PADEP COMMENTS.
3	03.14.2025	REVISED PER BCCD COMMENTS.
4		
5		
6		
7		
8		
9		

SHEET TITLE:
PCSM DETAILS

SHEET: **PCDT-3** **10**

FILE PATH & NAME: P:\0012\001261_0555\C3D\Plan Sets\L0012610555DT-PC.dwg LAYOUT:PC_PCDT-3 LAST PLOTTED: 3/13/2025 4:57 PM BY:JTAI

Instr: 202511140019061
Pgs: 1 F: $45.00 11/14/2025 3:42 PM
Michele Mustello T20250015969
Butler County Recorder PA

MICHAEL C MALAK
PE-073220
TOWNSHIP ENGINEER

JAMES ANTHONY SPERDUTE
No.SU.024457E
REGISTERED SURVEYOR

SEAL
CRANBERRRY TWP
BOARD OF SUPERVISORS

BUTLER COUNTY
PLANNING COMMISSION

BUTLER COUNTY
RECORDER OF DEEDS

BY RESOLUTION APPROVED ON THE 9 DAY OF October, 2025, THE BOARD OF DIRECTORS OF NVR,, INCORPORATED IN THE COMMONWEALTH OF PENNSYLVANIA, OWNER OF THE LAND SHOWN ON THE PARK PLACE AMENDMENT NO. 75 PLAN ADOPTED THIS PLAN AS ITS PLAN OF LOTS AND IRREVOCABLY DEDICATED ALL STREETS AND OTHER PROPERTY IDENTIFIED FOR DEDICATION THE PLAN TO THE PUBLIC. THIS ADOPTION AND DEDICATION SHALL BE BINDING UPON THE CORPORATION AND UPON ITS SUCCESSORS AND ASSIGNS.

SIGNATURE AND TITLE OF OFFICER WITNESSING

NVR, INC.
VP
SIGNATURE AND TITLE OF AUTHORIZED OFFICER

10-9-25
DATE

BEFORE ME, THE UNDERSIGNED NOTARY PUBLIC IN AND FOR THE COMMONWEALTH OF PENNSYLVANIA AND COUNTY OF ALLEGHENY, PERSONALLY APPEARED peter Robertson VP OF NVR, INC. WHO STATED THAT HE IS AUTHORIZED TO EXECUTE THE ABOVE ADOPTION AND DEDICATION ON BEHALF OF THE CORPORATION AND WAS PRESENT AT THE MEETING AT WHICH THE ACTION OF THE CORPORATION WAS TAKEN TO ADOPT THE PLAN AND DEDICATE PUBLIC PROPERTY CONTAINED THEREIN TO THE PUBLIC.

WITNESS MY HAND AND NOTARIAL SEAL THIS 9th DAY OF October, 2025

(SEAL)

Lissette Sprott
NOTARY PUBLIC

Commonwealth of Pennsylvania - Notary Seal
LISSETTE SPROTT - Notary Public
Allegheny County
My Commission Expires December 7, 2026
Commission Number 1195287

I, Peter Robertson, VP of NVR HEREBY CERTIFY THAT THE TITLE TO THE PROPERTY CONTAINED IN THE PARK PLACE AMENDMENT NO. 75 IS IN THE NAME OF NVR, INC. AND IS RECORDED AT INSTRUMENT NO. INSTRUMENT NO. 202508270013676. I FURTHER CERTIFY THAT THERE IS NO MORTGAGE, LIEN OR OTHER ENCUMBRANCE AGAINST THIS PROPERTY

SIGNATURE OF WITNESS

VP
SIGNATURE AND TITLE OF AUTHORIZED OFFICER

I CERTIFY THAT, TO THE BEST OF MY KNOWLEDGE, THE SURVEY AND PLAN SHOWN HEREON ARE CORRECT AND ACCURATE TO THE STANDARDS REQUIRED.

10/6/25
DATE

JAMES A. SPERDUTE, R.S. # 24457-E

I, MICHAEL C MALAK, A REGISTERED PROFESSIONAL ENGINEER, THE TOWNSHIP ENGINEER OF THE TOWNSHIP OF CRANBERRY, DO HEREBY CERTIFY THAT THIS SUBDIVISION PLAN MEETS ALL ENGINEERING AND DESIGN REQUIREMENTS OF THE TOWNSHIP SUBDIVISION AND ZONING ORDINANCE EXCEPT AS DEPARTURES HAVE BEEN AUTHORIZED BY THE APPROVAL AUTHORITY.

11/11/2025
DATE

SIGNATURE
REGISTRATION NO. PE-073220

APPROVED BY THE BOARD OF SUPERVISORS OF THE TOWNSHIP OF CRANBERRY BY ~~ORDINANCE~~/RESOLUION NO. 2025-71 EFFECTIVE THIS 6th DAY OF November, 2025.

SECRETARY

Bruce W. Hoy
CHAIRPERSON

I, ~~JERRY ANDREE~~ Daniel A Santoro, TOWNSHIP MANAGER FOR THE TOWNSHIP OF CRANBERRY CERTIFY THAT THE CONDITIONS FOR FINAL APPROVAL OUTLINED IN ~~ORDINANCE~~/RESOLUTION NO. 2025-71 HAVE BEEN MET IN ACCORDANCE WITH SECTION 22-305 AND 22-307 OF THE TOWNSHIP CODE OF ORDINANCES, ~~OF~~.

TOWNSHIP MANANGER

REVIEWED BY THE BUTLER COUNTY PLANNING COMMISSION ON THIS 15th DAY OF October, 2025.

R. Henshaw MKG
SECRETARY

J. Hines MKG
CHAIRPERSON

Plan # 25218

RECORDED IN THE OFFICE OF THE RECORDER OF DEEDS OF THE COUNTY OF BUTLER, COMMONWEALTH OF PENNSYLVANIA, IN PLAN BOOK 434 PAGE 32.

GIVEN UNDER MY HAND AND SEAL THIS 14th DAY OF November, 2025.

Michele M Mustello
RECORDER OF DEEDS

MICHELE M. MUSTELLO
RECORDER OF DEEDS
My Commission Expires First Monday in January 2028

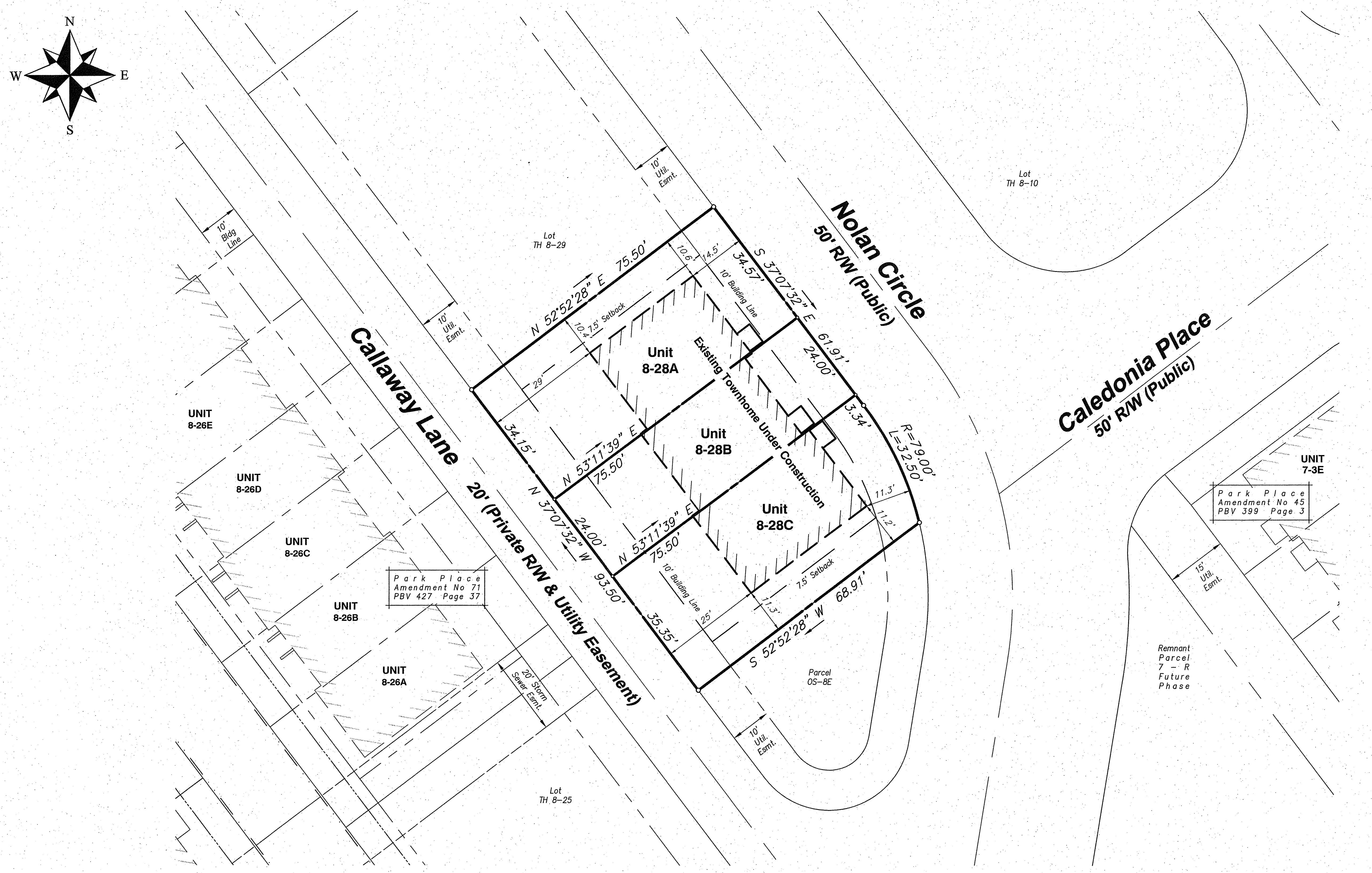
N
E
S
W
Lot TH 8-29
Lot TH 8-10
Lot TH 8-25
10' Bldg Line
10' Util. Esmt.
Callaway Lane
20' (Private R/W & Utility Easement)
Nolan Circle
50' R/W (Public)
Caledonia Place
50' R/W (Public)
UNIT 8-26E
UNIT 8-26D
UNIT 8-26C
UNIT 8-26B
UNIT 8-26A
Park Place Amendment No 71 PBV 427 Page 37
Park Place Amendment No 45 PBV 399 Page 3
UNIT 7-3E
15' Util. Esmt.
20' Storm Sewer Esmt.
Remnant Parcel 7-R Future Phase
Parcel OS-8E
Unit 8-28A
Unit 8-28B
Unit 8-28C
Existing Townhome Under Construction
N 52°52'28" E 75.50'
S 37°07'32" E 34.57'
24.00'
61.91'
3.34'
R=79.00'
L=32.50'
N 53°11'39" E 75.50'
N 53°11'39" E 75.50'
N 37°07'32" W 93.50'
34.15'
24.00'
35.35'
S 52°52'28" W 68.91'
7.5' Setback
10' Building Line
10.6'
14.5'
10.4'
29'
25'
11.3'
11.2'
11.3'

GRAPHIC SCALE

20 0 10 20 40 80

(IN FEET)
1 inch = 20 ft.

Parcel Table – Original Lots		
Lot Number	Lot Area (Sq.Ft.)	Lot Area (Acres)
TH 8-28	6,991.033	0.16

Parcel Table – Proposed Lots/Units		
Unit Number	Lot Area (Sq.Ft.)	Lot Area (Acres)
8-28A	2,594.133	0.060
8-28B	1,812.028	0.042
8-28C	2,584.872	0.059

LOCATION MAP 1" = 2000'

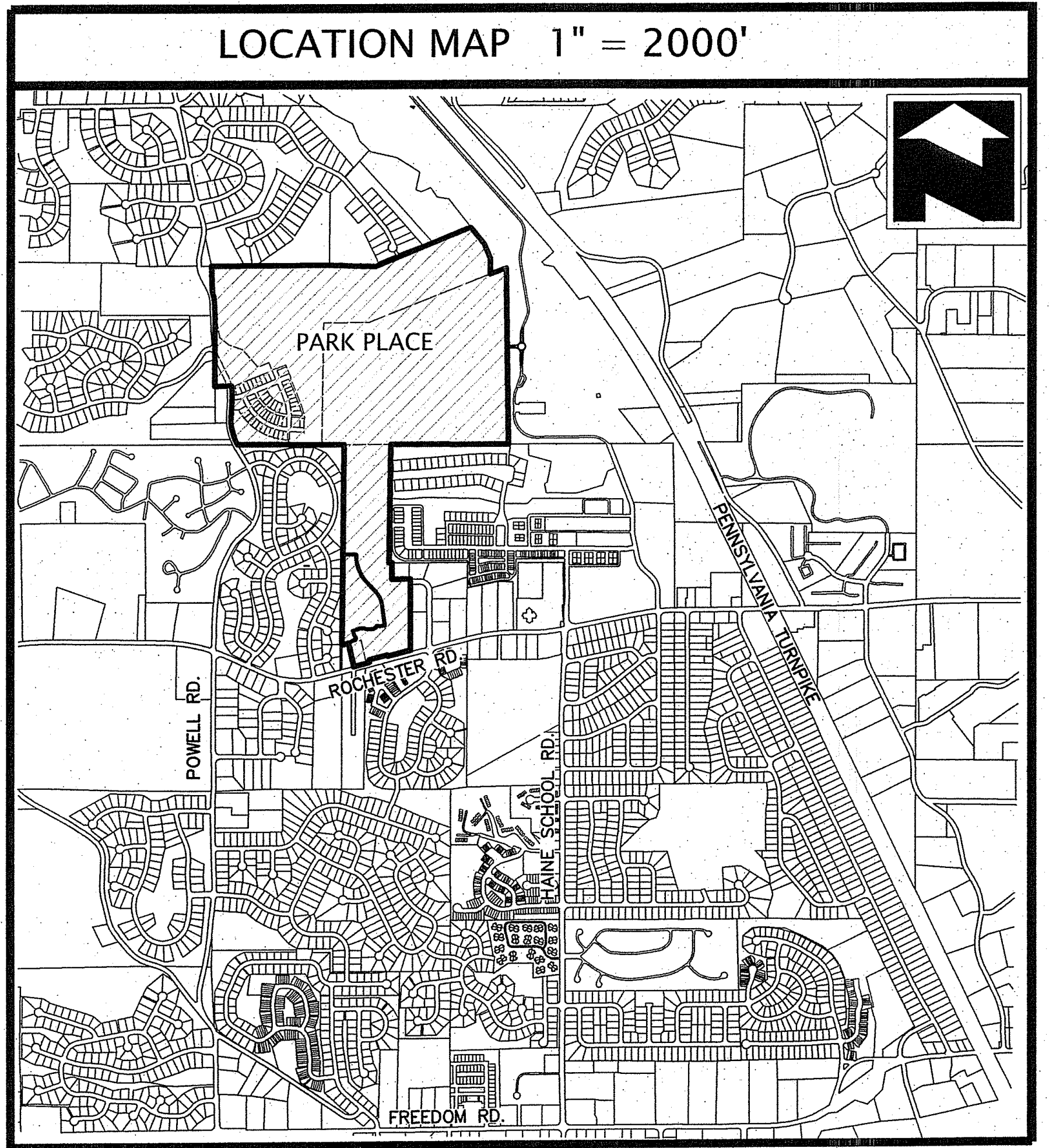
PARK PLACE
POWELL RD.
ROCHESTER RD.
FREEDOM RD.
PENNSYLVANIA TURNPIKE

PLAN BOOK	PAGE
434	32

GENERAL PLAN NOTES

- THIS PLAN IS A RE-SUBDIVISION OF PARCEL TH 8-28 OF THE PARK PLACE REVISED FINAL PHASE 8B AS RECORDED IN PLAN BOOK 411, PAGES 27-28.
- THIS PLAN IS SUBJECT TO ANY AND ALL CONDITIONS OF THE PREVIOUSLY APPROVED AND RECORDED PLANS.
- IF APPLICABLE, BEARINGS LABELED AS (NR) ARE NON-RADIAL TO THE INTERSECTING RIGHT OF WAY LINE.

AFFECTED ZONING CLASSIFICATION: CCD-2
PROPOSED USE : CCD-2

MINIMUM LOT SIZE	PER PATTERN BOOK
MINIMUM LOT WIDTH	PER PATTERN BOOK
MINIMUM FRONT SETBACK	PER PATTERN BOOK
MINIMUM REAR SETBACK	PER PATTERN BOOK
MINIMUM SIDE SETBACK	PER PATTERN BOOK
MAXIMUM BUILDING HEIGHT	PER PATTERN BOOK

PROPERTY REFERENCES

LOT TH 8-28
TAX PARCEL 130-S46-B28
INST# 202508270013676
PARK PLACE REVISED FINAL PHASE 8B
PBV 411 PAGES 27-28

DEVELOPER / PROPERTY OWNER:
NVR
ONE PENN CENTER WEST, SUITE 220
PITTSBURGH, PA 15276
BUILT BY:
Ryan Homes

DRAWING NUMBER:	1004-2528289
DRAWING SCALE:	1"=20'
DATE:	September 17, 2025
DRAWN BY:	
REVISIONS:	

PARK PLACE
AMENDMENT NO. 75

BEING A RE-SUBDIVISION OF PARCEL TH 8-28 OF THE PARK PLACE REVISED FINAL PHASE 8B
CRANBERRY TOWNSHIP, BUTLER COUNTY, PENNSYLVANIA

Sperdute Land Surveying
A Division of Sheffler & Company
441 Mars-Valencia Rd, Suite 3C
Valencia, PA 16059
108 Deer Lane
Harmony, PA 16037
1712 Mount Nebo Road
Sewickley, PA 15143
Office Phone: 724-452-4362
Email: Info@SperduteSurveying.com
James A. Sperdute, RS # 24457-E

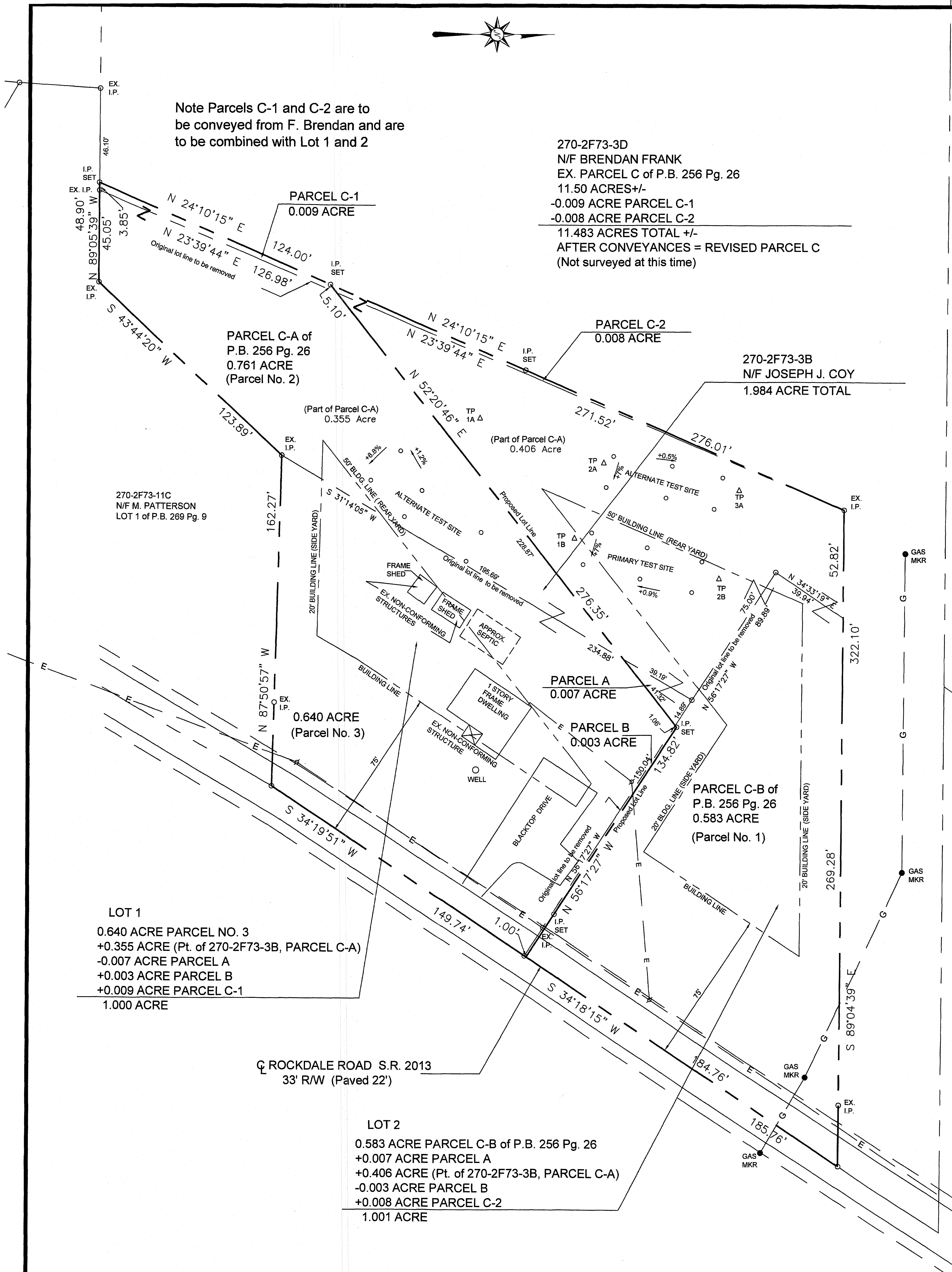
EX. I.P.
Note Parcels C-1 and C-2 are to
be conveyed from F. Brendan and are
to be combined with Lot 1 and 2
46.10'
I.P. SET
EX. I.P.
48.90'
N 89°05'39" W
45.05'
3.85'
N 24°10'15" E
N 23°39'44" E
Original lot line to be removed
124.00'
126.98'
PARCEL C-1
0.009 ACRE
I.P. SET
5.10'
EX. I.P.
S 43°44'20" W
PARCEL C-A of
P.B. 256 Pg. 26
0.761 ACRE
(Parcel No. 2)
123.89'
270-2F73-3D
N/F BRENDAN FRANK
EX. PARCEL C of P.B. 256 Pg. 26
11.50 ACRES+/-
-0.009 ACRE PARCEL C-1
-0.008 ACRE PARCEL C-2
11.483 ACRES TOTAL +/-
AFTER CONVEYANCES = REVISED PARCEL C
(Not surveyed at this time)
PARCEL C-2
0.008 ACRE
I.P. SET
270-2F73-3B
N/F JOSEPH J. COY
1.984 ACRE TOTAL
N 52°20'46" E
271.52'
276.01'
TP 1A
(Part of Parcel C-A)
0.355 Acre
(Part of Parcel C-A)
0.406 Acre
+8.8%
+1.2%
+0.5%
+7%
TP 2A
ALTERNATE TEST SITE
TP 3A
EX. I.P.
270-2F73-11C
N/F M. PATTERSON
LOT 1 of P.B. 269 Pg. 9
162.27'
S 31°14'05" W
50' BLDG. LINE (REAR YARD)
ALTERNATE TEST SITE
Proposed Lot Line
228.87'
TP 1B
50' BUILDING LINE (REAR YARD)
PRIMARY TEST SITE
+0.9%
TP 2B
52.82'
GAS MKR
20' BUILDING LINE (SIDE YARD)
FRAME SHED
Original lot line to be removed
195.69'
EX. NON-CONFORMING STRUCTURES
FRAME SHED
APPROX. SEPTIC
276.35'
N 34°33'19" E
39.94'
75.00'
89.89'
322.10'
234.88'
BUILDING LINE
PARCEL A
0.007 ACRE
39.19'
41.32'
14.89'
1.06'
Original lot line to be removed
N 56°17'27" W
N 87°50'57" W
EX. I.P.
0.640 ACRE
(Parcel No. 3)
1 STORY FRAME DWELLING
EX. NON-CONFORMING STRUCTURE
PARCEL B
0.003 ACRE
I.P. SET
WELL
150.04'
134.82'
BLACKTOP DRIVE
Proposed Lot Line
20' BLDG. LINE (SIDE YARD)
PARCEL C-B of
P.B. 256 Pg. 26
0.583 ACRE
(Parcel No. 1)
20' BUILDING LINE (SIDE YARD)
269.28'
S 34°19'51" W
75'
Original lot line to be removed
N 56°17'27" W
I.P. SET
EX. I.P.
149.74'
1.00'
E
BUILDING LINE
GAS MKR
LOT 1
0.640 ACRE PARCEL NO. 3
+0.355 ACRE (Pt. of 270-2F73-3B, PARCEL C-A)
-0.007 ACRE PARCEL A
+0.003 ACRE PARCEL B
+0.009 ACRE PARCEL C-1
1.000 ACRE
S 34°18'15" W
270-2F73-3
N/F C.M. PORCO
PARCEL D of
P.B. 234 Pg. 18
270-2F73-3C
N/F S.V. FULLER &
E.J. FRANK
RESIDUAL TRACT of
P.B. 256 Pg. 26.
S 89°04'39" E
G
GAS MKR
EX. I.P.
184.76'
185.76'
GAS MKR
℄ ROCKDALE ROAD S.R. 2013
33' R/W (Paved 22')
LOT 2
0.583 ACRE PARCEL C-B of P.B. 256 Pg. 26
+0.007 ACRE PARCEL A
+0.406 ACRE (Pt. of 270-2F73-3B, PARCEL C-A)
-0.003 ACRE PARCEL B
+0.008 ACRE PARCEL C-2
1.001 ACRE
0 30 60 90

NOTES:

SUBJECT TO ANY AND ALL EXISTING RIGHTS-OF-WAY AND EASEMENTS OF RECORD.

REF: WAYNE D. & NANCY S. BARLEY PLAN OF SUBDIVISION, P.B. 256 PG. 26.

REF: F. TUPPER, JR. PLAN, P.B. 269 PG. 9.

REF: R.A. SALVATORA PLAN, P.B. 234 PG. 18

ACCORDING TO THE FLOOD INSURANCE RATE MAP PREPARED FOR THIS TOWNSHIP, THIS PROPERTY LIES IN ZONE X - AREA OF MINIMAL FLOOD HAZARD DETERMINED TO BE OUTSIDE THE 0.2% ANNUAL CHANCE FLOODPLAIN.

ZONED: RE RESIDENTIAL ESTATE

BUILDING SETBACK REQUIREMENTS:
FRONT SETBACK: 50' FROM R/W or
75' FROM CENTERLINE
SIDE SETBACK: 20'
REAR SETBACK: 50'

PROPERTY OWNER: JOE COY
P.O. BOX 233
VALENCIA, PA 16059

BRENDAN FRANK
329 OTTERSON STREET
PITTSBURGH, PA 15204

PROPOSED WATER WELL TO SERVE THIS LOT IS TO BE LOCATED OUTSIDE OF THE 100' ISOLATION DISTANCE FROM THE SEPTIC SYSTEM TO BE BUILT.

Instr: 202511170019098
Pgs: 1 F: $45.00 11/17/2025 9:54 AM
Michele Mustello T20250016007
Butler County Recorder PA

KNOW ALL MEN BY THESE PRESENTS, that I, Brendan Frank, of the Township of Penn, County of Butler and State of Pennsylvania for myself, my heirs, executors, administrators and assigns, do hereby adopt this as my Plan of Lots of my property, situate in Penn Township, Pennsylvania, and for divers advantages accruing to me, do hereby dedicate forever, for public use for highway purposes, all drives, roads, streets, lanes and ways and other public highways shown upon the plan, with the same force and effect as if the same had been opened through legal proceedings, and I hereby release and forever discharge the Township of Penn, their successors and assigns, from any liability for damage caused by any grading thereof to any grades hereafter at any time established and any slopes required for the support and maintenance thereof according to such established grades. This dedication and release shall be binding upon Brendan Frank, my heirs, executors, administrators and assigns and purchasers of lots in this plan.

IN WITNESS WHEREOF, I hereunto set my hand and seal this 31 day of Oct., 2025.

ATTEST:

NOTARY PUBLIC OWNER

Commonwealth Of Pennsylvania - Notary Seal
Jarah Roxberry, Notary Public
Butler County
My Commission Expires February 24, 2026
Commission Number 1281872

STATE OF PENNSYLVANIA)SS:
COUNTY OF BUTLER)

Before me, the subscriber, a Notary Public in and for said State and County, personally came the above named Brendan Frank and acknowledged the foregoing release and dedication and plan to be his act and deed and desired the same to be recorded as such.

WITNESS MY HAND AND NOTARIAL SEAL this 31 day of Oct, 2025.

My Commission expires the 24 day of Feb, 2026.

SEAL

NOTARY PUBLIC

Commonwealth Of Pennsylvania - Notary Seal
Jarah Roxberry, Notary Public
Butler County
My Commission Expires February 24, 2026
Commission Number 1281872

MORTGAGE CLAUSES
I, Brendan Frank, owner of the property shown in this plan of subdivision, do hereby certify that there is no mortgage, lien or encumbrance against this property.

WITNESS OWNER

KNOW ALL MEN BY THESE PRESENTS, that I, Joseph J. Coy, of the Township of Penn, County of Butler and State of Pennsylvania for myself, my heirs, executors, administrators and assigns, do hereby adopt this as my Plan of Lots of my property, situate in Penn Township, Pennsylvania, and for divers advantages accruing to me, do hereby dedicate forever, for public use for highway purposes, all drives, roads, streets, lanes and ways and other public highways shown upon the plan, with the same force and effect as if the same had been opened through legal proceedings, and I hereby release and forever discharge the Township of Penn, their successors and assigns, from any liability for damage caused by any grading thereof to any grades hereafter at any time established and any slopes required for the support and maintenance thereof according to such established grades. This dedication and release shall be binding upon Joseph J. Coy, my heirs, executors, administrators and assigns and purchasers of lots in this plan.

IN WITNESS WHEREOF, I hereunto set my hand and seal this 31 day of Oct, 2025.

ATTEST:

NOTARY PUBLIC OWNER

Commonwealth Of Pennsylvania - Notary Seal
Jarah Roxberry, Notary Public
Butler County
My Commission Expires February 24, 2026
Commission Number 1281872

STATE OF PENNSYLVANIA)SS:
COUNTY OF BUTLER)

Before me, the subscriber, a Notary Public in and for said State and County, personally came the above named Joseph J. Coy and acknowledged the foregoing release and dedication and plan to be his act and deed and desired the same to be recorded as such.

WITNESS MY HAND AND NOTARIAL SEAL this 31 day of Oct, 2025.

My Commission expires the 24 day of Feb, 2026.

SEAL

NOTARY PUBLIC

Commonwealth Of Pennsylvania - Notary Seal
Jarah Roxberry, Notary Public
Butler County
My Commission Expires February 24, 2026
Commission Number 1281872

MORTGAGE CLAUSES
I, Joseph J. Coy, owner of the property shown in this plan of subdivision, do hereby certify that there is no mortgage, lien or encumbrance against this property.

WITNESS OWNER

I, Cheryl A. Hughes, a Registered Professional Land Surveyor of the State of Pennsylvania, do hereby certify that this plan correctly represents the lots, lands, streets, alleys and highways as surveyed and plotted by me for the owners or agents.

I further certify that there are no requirements of Zoning existent under the laws of the Township in which this subdivision is located.

I further certify that this plan meets with the requirements of all ordinances, including Zoning, existent under the laws of the Township in which this subdivision is located and which affect this plan.

Cheryl A Hughes 4/15/25
SURVEYOR'S NAME & DATE

NOTE: EXCEPTIONS TO REQUIREMENTS OF ZONING ARE NOTED ON PLAN.

Approved by the Board of Supervisors of the Penn Township by Resolution this 10 day of NOVEMBER, 2025.

ATTEST:
Linda N Zerfoss SEAL Samuel M Ward
SECRETARY CHAIRMAN

The Board of Supervisors of Penn Township hereby gives public notice that, in approving this plan for recording purposes only, the Township assumes no obligations, legal or otherwise, expressed or implied, either to accept said streets as public streets or roads, or to grade, pave and curb the streets in said plan, or to construct sewers therein or to install any other streets or roads.

ATTEST:
Linda N Zerfoss SEAL Samuel M Ward
SECRETARY CHAIRMAN

The following owner(s) of the land within or adjacent to this plan of lots do hereby agree to the recording of this plan insofar as if affects these properties.

Approved by the Planning Commission of the Township of Penn this 22 day of April, 2025.

ATTEST:
Art Black SEAL
SECRETARY CHAIRMAN

Reviewed by the Butler County Planning Commission this 21st day of May, 2025.

ATTEST:
R. Henshaw MKG J. Hines MKG
SECRETARY CHAIRMAN
Plan # 25102

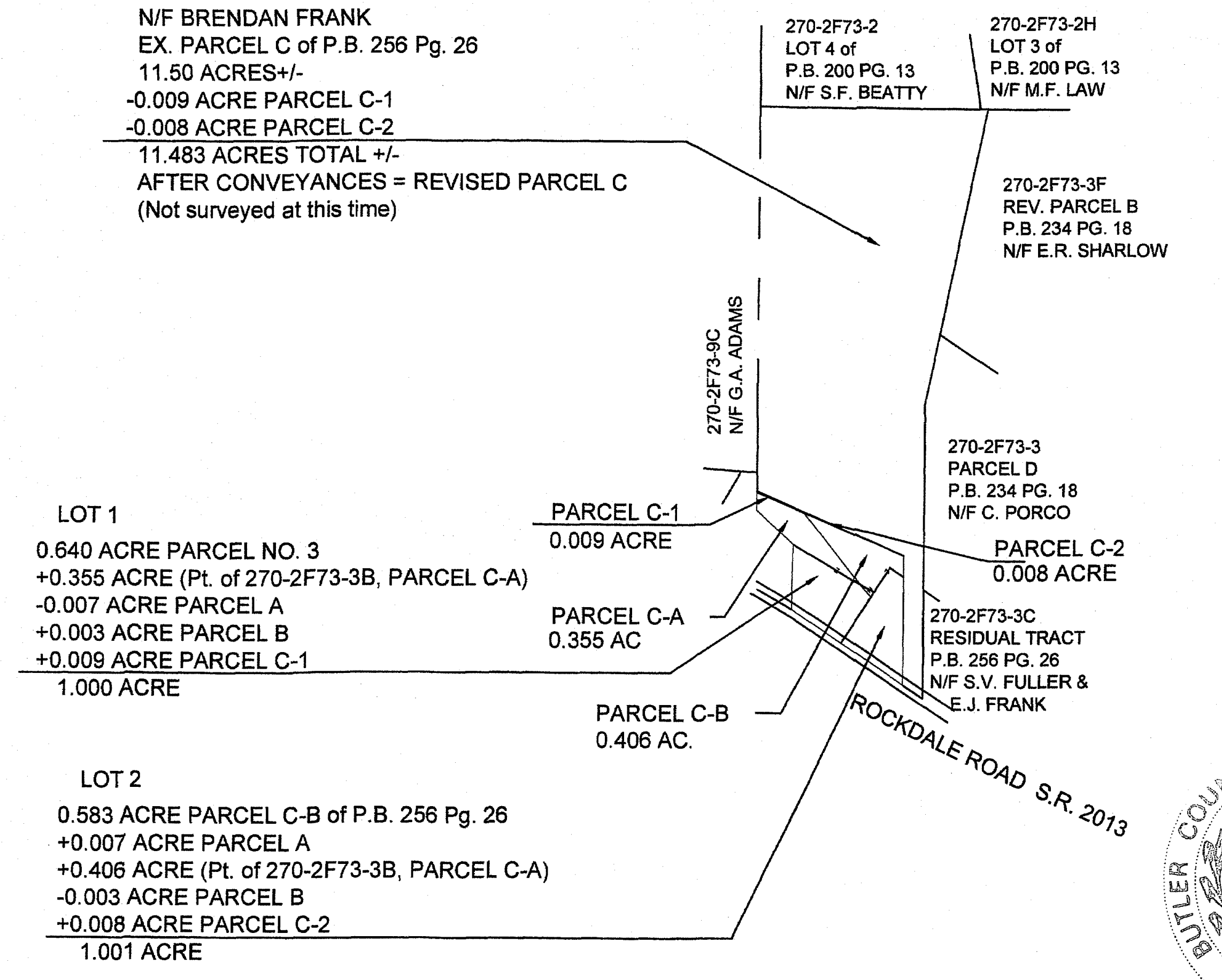
270-2F73-3D
N/F BRENDAN FRANK
EX. PARCEL C of P.B. 256 Pg. 26
11.50 ACRES+/-
-0.009 ACRE PARCEL C-1
-0.008 ACRE PARCEL C-2
11.483 ACRES TOTAL +/-
AFTER CONVEYANCES = REVISED PARCEL C
(Not surveyed at this time)
270-2F73-2
LOT 4 of
P.B. 200 PG. 13
N/F S.F. BEATTY
270-2F73-2H
LOT 3 of
P.B. 200 PG. 13
N/F M.F. LAW
270-2F73-3F
REV. PARCEL B
P.B. 234 PG. 18
N/F E.R. SHARLOW
270-2F73-9C
N/F G.A. ADAMS
270-2F73-3
PARCEL D
P.B. 234 PG. 18
N/F C. PORCO
LOT 1
0.640 ACRE PARCEL NO. 3
+0.355 ACRE (Pt. of 270-2F73-3B, PARCEL C-A)
-0.007 ACRE PARCEL A
+0.003 ACRE PARCEL B
+0.009 ACRE PARCEL C-1
1.000 ACRE
PARCEL C-1
0.009 ACRE
PARCEL C-2
0.008 ACRE
PARCEL C-A
0.355 AC
270-2F73-3C
RESIDUAL TRACT
P.B. 256 PG. 26
N/F S.V. FULLER &
E.J. FRANK
PARCEL C-B
0.406 AC.
ROCKDALE ROAD S.R. 2013
LOT 2
0.583 ACRE PARCEL C-B of P.B. 256 Pg. 26
+0.007 ACRE PARCEL A
+0.406 ACRE (Pt. of 270-2F73-3B, PARCEL C-A)
-0.003 ACRE PARCEL B
+0.008 ACRE PARCEL C-2
1.001 ACRE

LOCATION MAP Scale: 1" = 400'

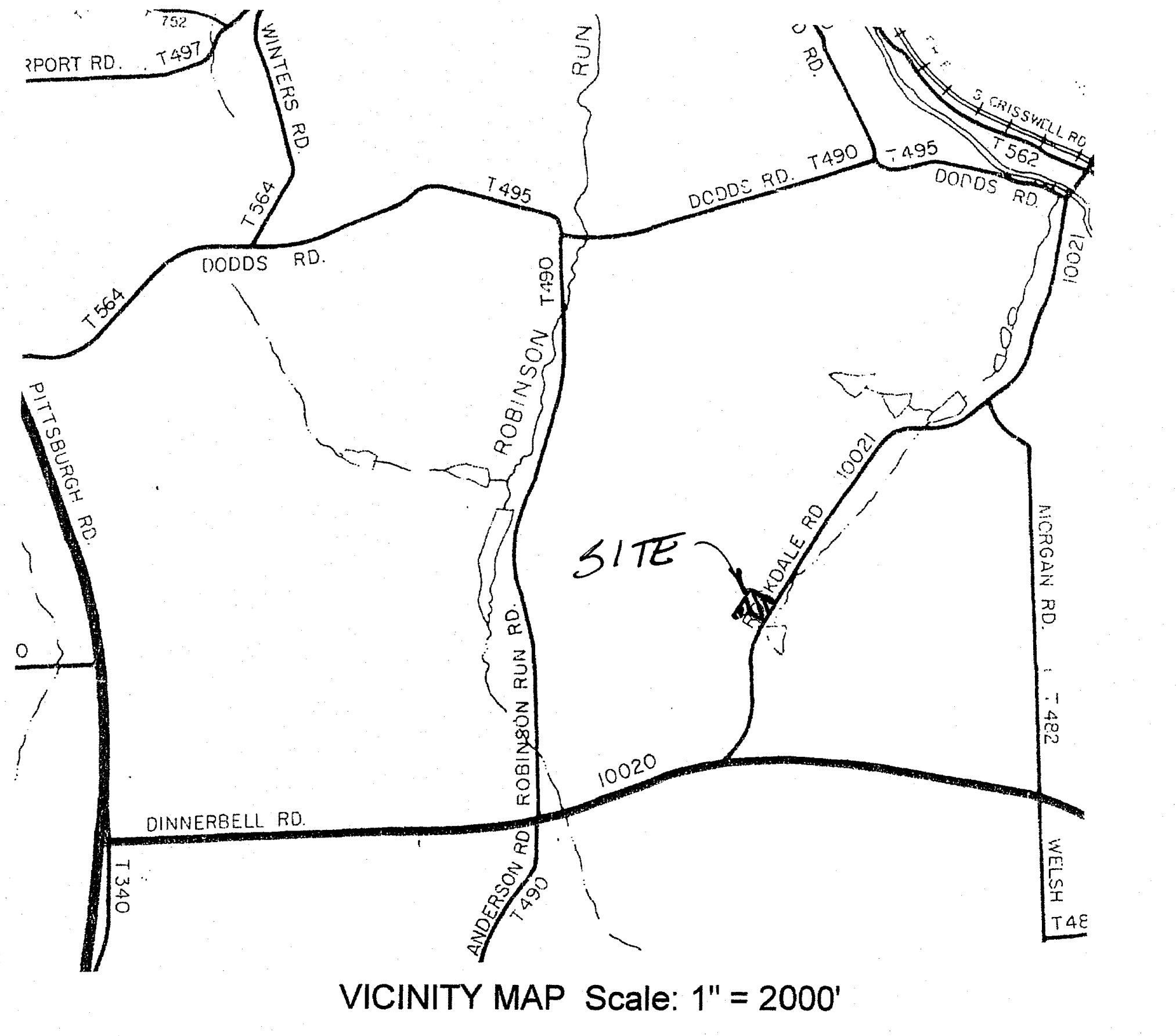
T752
PORT RD. T497
WINTERS RD.
T564
DODDS RD.
T495
RUN
DODDS RD. T490
T495
CRISSWELL RD
T562
DODDS RD.
10021
T564
ROBINSON T490
PITTSBURGH RD.
SITE
ROCKDALE RD
10021
MCRGAN RD.
T482
ROBINSON RUN RD.
10020
DINNERBELL RD.
T340
ANDERSON RD T490
WELSH T48

VICINITY MAP Scale: 1" = 2000'

STATE OF PENNSYLVANIA)SS:
COUNTY OF BUTLER)

Recorded in the Recorder's Office for the recording of deeds, plans, etc. in said County in Plan Book Volume 434 Page 33.

Given under my hand and seal this 17th day of November, 2025.

SEAL

Michele M Mustello
RECORDER

MICHELE M. MUSTELLO
RECORDER OF DEEDS
My Commission Expires First Monday in January 2028

PLAN BOOK	PAGE
434	33

PARCEL #270-2F73-3B & 3D
INST. #202208100017226
INST. #202207070014694

No.	Date	Description	By

COY/FRANK PLAN

MINOR SUBDIVISION FINAL PLAN
FOR: JOSEPH J. COY & BRENDAN FRANK
Situate In
PENN TWP., BUTLER CO., PENNSYLVANIA

Drawn By BEC	Scale: 1" = 30'	Drawing No. M1806-001-25
Checked By		Sheet No. 1 of 1
Approved By	Date: APRIL 15, 2025	Filename:

LSSE
Civil Engineers and Surveyors

523 North Main Street
Butler, Pennsylvania 16001
724-287-6865
Email: chughes@lsse.com

Fike • LSI • LSSE • Rabell • Senate

Location Map 1" = 2000'

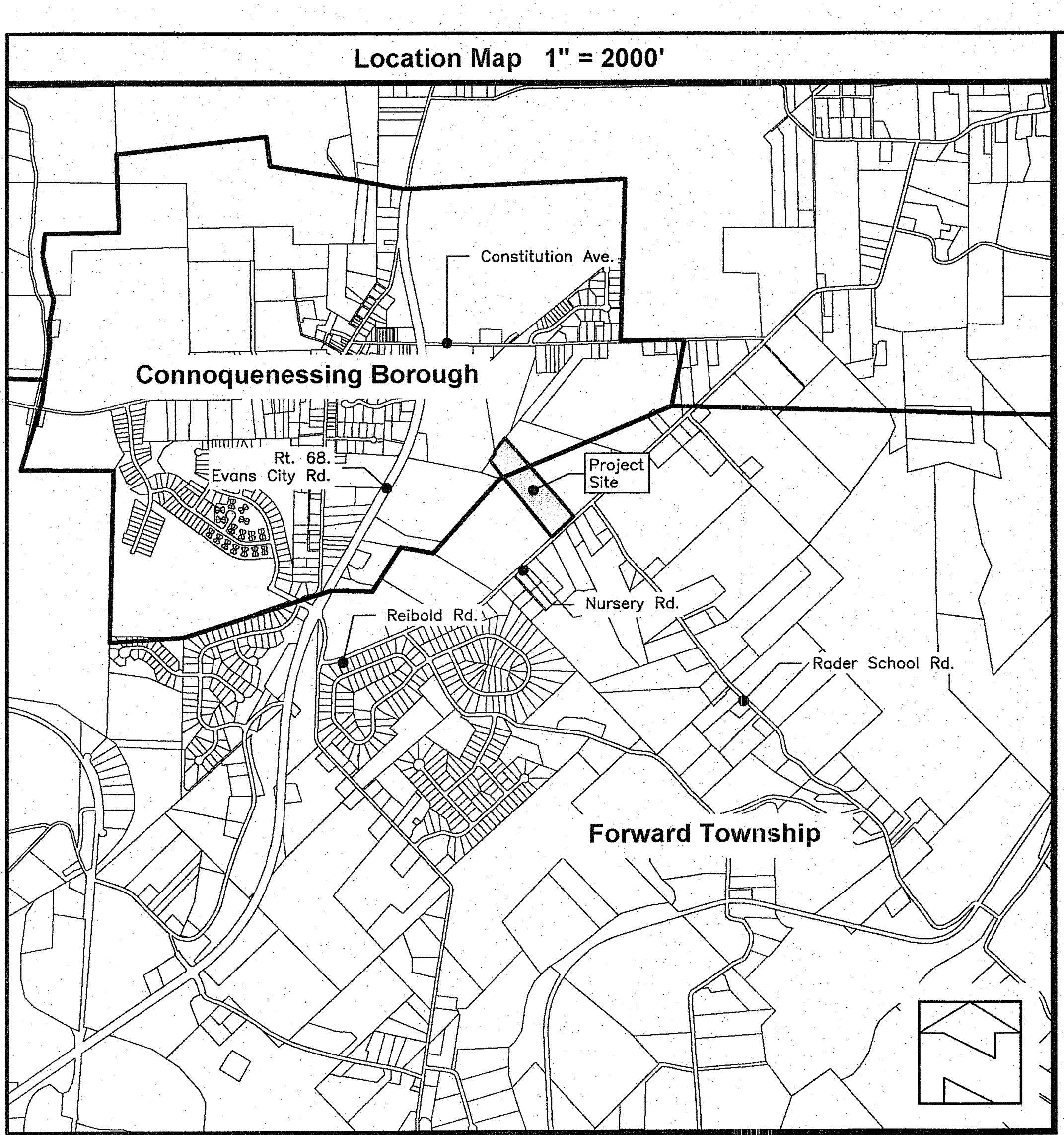

Constitution Ave.
Connoquenessing Borough
Rt. 68
Evans City Rd.
Project Site
Reibold Rd.
Nursery Rd.
Roder School Rd.
Forward Township

Property Owners:

Martin J. & Debra E. Schirra
166 Nursery Road
Renfrew, PA 16053

Tax Parcel 160-3F74-3A1A-0000
Deed Book 1424, Page 0484

Being Parcel "B" of the Hillvue Estates Plan of Lots
Plan Book 126, Page 31

Instr: 202511170019130
Pgs: 1 F: $45.00
11/17/2025 11:37 AM
T20250016032
Michele Mustello
Butler County Recorder PA

Notes:

This survey was prepared without the benefit of a title report and is subject to any and all easements, agreements, rights of way, leases and other items normally discovered through an abstract of title.

This survey is subject to utilities that may cross the property and would discovered through a dig notification to the Pennsylvania One Call system. Utility locations, capacities and conditions were not examined at the time of the survey.

Contours shown have been taken from the Pennsylvania Spatial Data Access System (PASDA) and are shown at 10-foot intervals. Vertical Datum : NAVD88.

Municipal boundary has been taken from county mapping.

According to available FEMA flood mapping, no portion of this property lies within a FEMA designated floodway or floodplain.

Forward Lot Requirements – No Zoning

Minimum Lot Area:	87,120 sq.ft. (2 Acres)
Minimum Lot Width at Building Line:	100.00 feet
Minimum Front Setback:	50.00 feet
Minimum Rear Setback:	20.00 feet
Minimum Side Setback:	15.00 feet

Connoquenessing Borough Lot Requirements – "A" Agricultural Zoning

Minimum Lot Area:	43,560 sq.ft. (1 Acre)
Minimum Lot Width at Building Line:	100.00 feet
Minimum Front Setback:	40.00 feet
Minimum Rear Setback:	40.00 feet
Minimum Side Setback:	10.00 feet

Owners Adoption

We, **MARTIN J. & DEBRA E. SCHIRRA,** owners of the land shown on the **SCHIRRA PLAN OF LOTS NO. 1** , hereby adopt this plan as our plan of lots and irrevocably dedicate all streets and other property identified for dedication on the plan to the public. Any future acceptance of said public streets or property by the Commonwealth of Pennsylvania, County of Butler, and Township of Forward, we hereby covenant and agree to and by these presents doe release and forever discharge said Commonwealth of Pennsylvania, County of Butler and Township of Forward, their successors or assigns from any liability for damages arising and to arise from any appropriation of said ground for public streets or property and the physical grading thereof to any grades that may be established. This adoption and dedication shall be binding upon our heirs, executors, and assigns.

Martin J. Schirra
MARTIN J. SCHIRRA

Debra E. Schirra
DEBRA E. SCHIRRA

Before me, the undersigned Notary Public in and for the Commonwealth of Pennsylvania and County of Butler, personally appeared the above named MARTIN J. & DEBRA E. SCHIRRA and acknowledged the foregoing adoption, dedication and plan to be their act and desired the same to be recorded as such.

Witness my hand and notarial seal this ______ day of ______

My commission expires the 3rd day of October 2025,

Jennifer Lyn Sperdute
(Seal) Notary Public

Commonwealth of Pennsylvania - Notary Seal
Jennifer Lyn Sperdute, Notary Public
Butler County
My commission expires October 14, 2027
Commission number 1358573
Member, Pennsylvania Association of Notaries

We hereby certify that the title to a portion of the property contained in the SHIRRA PLAN OF LOTS NO. 1 is in the name of MARTIN J. & DEBRA E. SCHIRRA and is recorded at Deed Book 1424, Page 0484

Jennifer Sperdute
Witness

Martin J. Schirra
MARTIN J. SCHIRRA

Jennifer Sperdute
Witness

Debra E. Schirra
DEBRA E. SCHIRRA

Land Surveyor

I certify that, to the best of my knowledge, that the survey and plan shown hereon correctly represents the lots, lands, streets and highways as surveyed and plotted by me.

James A. Sperdute, PLS # 24457-E

Date 9/29/25

James Anthony Sperdute
No. SU024457E

Forward Township

Reviewed by the Planning Commission of the Township of Forward, this 25 day of September, 2025.

Lindsey Borey
Secretary – Planning Commission

Chairperson – Planning Commission

The Board of Supervisors of the Township of Forward, hereby gives notice that in approving this plan for recording, the Township of Forward has not accepted dedication of any streets, land or public facilities and has no obligation to improve or maintain such streets, land or facilities.

Approved by the Board of Supervisors of the Township of Forward this 9 day of October, 2025.

Lindsey Borey
Secretary – Board of Supervisors

Chairperson – Board of Supervisors

Butler County Planning Commission

Reviewed by the Butler County Planning Commission 20th day of August, 2025.

R. Henshaw MKG
Secretary – Planning Commission

J. Hines MKG
Chairperson – Planning Commission

Plan No. 25174

Butler County Recorder of Deeds

Recorded in the office of the Recorder of Deeds of the County of Butler, Commonwealth of Pennsylvania, in Plan Book Volume 434, Page(s) 34

Given under my hand and seal this 17th day of November 2025,

(SEAL)

Michele M. Mustello
Recorder of Deeds

MICHELE M. MUSTELLO
RECORDER OF DEEDS
My Commission Expires First Monday in January 2028

Connoquenessing Borough Planning Committee Approval

This plan of subdivision has been recommended by the Planning Committee of the Borough of Connoquenessing, Butler County, Commonwealth of Pennsylvania on this ______ day of ______, 20______.

ATTEST:

Secretary

Chairperson

Approval by Borough of Connoquenessing

The Borough Council of the Borough of Connoquenessing, Butler County, Pennsylvania, hereby gives public notice that it is approving this plan of subdivision for recording purposes only. The approval of this subdivision plat by the Borough of Connoquenessing does not constitute an acceptance of the roads, streets, alleys, stormwater and sanitary sewage drainage facilities, easements or right-of-way, water mains or any other services or improvements shown on this plan nor an assumption of maintenance responsibility, nor will the same be accepted or maintained until constructed in accordance with all Borough specifications and requirements and officially accepted by actions of the Borough Council.

This plat of subdivision has been approved by the Borough Council of the Borough of Connoquenessing, Butler County, Commonwealth of Pennsylvania on this 3rd day of November, 2025.

ATTEST:

Secretary of Council

President of Council

Borough Engineer's Approval

Approved by the Borough Engineer of Connoquenessing Borough this 10th day of November, 2025.

Engineer

043880-E
Registration Number

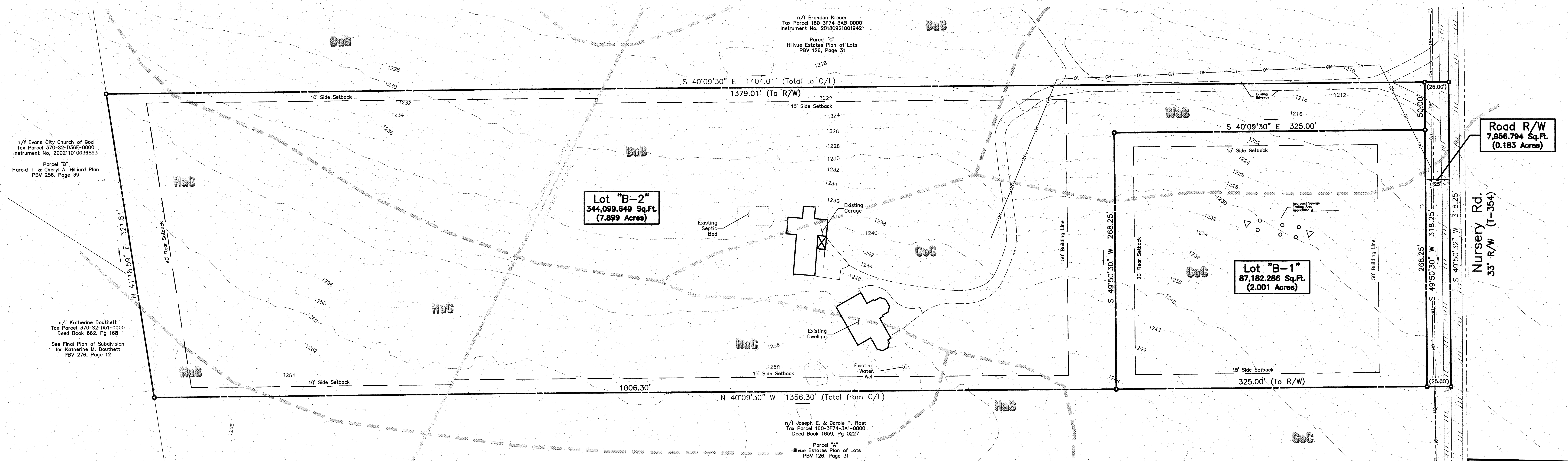

n/f Brandon Kreuer
Tax Parcel 160-3F74-3AB-0000
Instrument No. 201809210019421
Parcel "C"
Hillvue Estates Plan of Lots
PBV 126, Page 31
BuB
S 40°09'30" E 1404.01' (Total to C/L)
1379.01' (To R/W)
10' Side Setback
15' Side Setback
n/f Evans City Church of God
Tax Parcel 370-S2-D36E-0000
Instrument No. 200211010036893
Parcel "B"
Harold T. & Cheryl A. Hilliard Plan
PBV 256, Page 39
HaC
N 41°18'59" E 321.81'
40' Rear Setback
Connoquenessing Borough
Forward Township
Lot "B-2"
344,099.649 Sq.Ft.
(7.899 Acres)
Existing Septic Bed
Existing Garage
Existing Dwelling
Existing Water Well
CoC
n/f Katherine Douthett
Tax Parcel 370-S2-D51-0000
Deed Book 662, Pg 168
See Final Plan of Subdivision for Katherine M. Douthett
PBV 276, Page 12
HaB
1006.30'
N 40°09'30" W 1356.30' (Total from C/L)
n/f Joseph E. & Carole P. Rost
Tax Parcel 160-3F74-3A1-0000
Deed Book 1659, Pg 0227
Parcel "A"
Hillvue Estates Plan of Lots
PBV 126, Page 31
50' Building Line
S 49°50'30" W 268.25'
WaB
Existing Driveway
S 40°09'30" E 325.00'
20' Rear Setback
Approved Sewage Testing Area Application #
Lot "B-1"
87,182.286 Sq.Ft.
(2.001 Acres)
325.00' (To R/W)
(25.00')
50.00'
25'
268.25'
S 49°50'30" W 318.25'
S 49°50'32" W 318.25'
Road R/W
7,956.794 Sq.Ft.
(0.183 Acres)
Nursery Rd.
33' R/W (T-354)
OH
1210
1212
1214
1216
1218
1222
1224
1226
1228
1230
1232
1234
1236
1238
1240
1242
1244
1246
1256
1258
1260
1262
1264
1266

PLAN BOOK	PAGE
434	34

Soils Legend

BuB	Buchanan Loam	3 to 8 percent slopes
CoC	Cookport Loam	3 to 8 percent slopes
HaB	Hazelton Channery Loam	3 to 8 percent slopes
HaC	Hazelton Channery Loam	8 to 15 percent slopes
WaB	Wharton Silt Loam	3 to 8 percent slopes

Parcel Table – Original Lots

Lot Number	Lot Area (Sq.Ft.)	Lot Area (Acres)
Parcel B	439,238.730	10.084

Parcel Table – Proposed Lots/Units

Unit Number	Lot Area (Sq.Ft.)	Lot Area (Acres)
Lot B–1	87,182.286	2.001
Lot B–2	344,099.649	7.899
Road R/W	7,956.794	0.183

0 50 100 Feet

Revision 1) 08/13/2025 - Add Connoquenessing Borough Certificates (JLS)

Prepared By:

Sperdute Land Surveying
A Division of Sheffler & Company
441 Mars-Valencia Road, Suite 313
Valencia, PA 16059

108 Deer Lane
Harmony, PA 16037

1712 Mount Nebo Road
Sewickley, PA 15143

Office Phone: 724-452-4362
Email: Info@SperduteSurveying.com

Plan of Subdivision

Prepared For:

Martin J. & Debra E. Schirra

Situate In:

Forward Township & Connonquenessing Borough
Butler County, Pennsylvania

Schirra Plan of Lots No. 1

DRAWING SCALE: 1"=50'	DESIGNED BY: JSS
DATE ISSUED: July 22, 2025	REVIEWED BY: JAS
PROJECT JOB#: 1006-2527584	

Client:
Martin J. & Debra E. Schirra
166 Nursery Road
Renfrew, PA 16053

Sheet No.
1 of 1

Dimensional / Zoning Requirements (Section 27-1516) for Townhomes

		Required	Provided on this plan
Minimum Lot Size (Interior Units - Attached by at least two sides):		2000.00 sf	2,700.600 sf
Minimum Lot Size (End Units - Attached by on side only):		3000.00 sf	4,027.447 sf
Minimum Lot Width at Street Right of Way Line:		22.00 ft	24 ft
Minimum Lot Width at Front Buiding Setback Line:		22.00 ft	24 ft
Minimum Side Yard Setback (At Attached Dwelling Party Wall)	Primary	0.00 ft	0.00 ft
	Accessory	5.00 ft	5.00 ft
Minimum Side Yard Setback (At End Dwelling Units):	Primary	10.00 ft	10.00 ft
	Accessory	5.00 ft	5.00 ft
Minimum Distance Between Primary Buildings:		30.00 ft	22.00 ft*

*Modification Granted for Building Separation as part of overall PRD Approval.

Instr: 202511170019132
Pgs: 1 F: $45.00 11/17/2025 11:44 AM
Michele Mustello T20250016034
Butler County Recorder PA

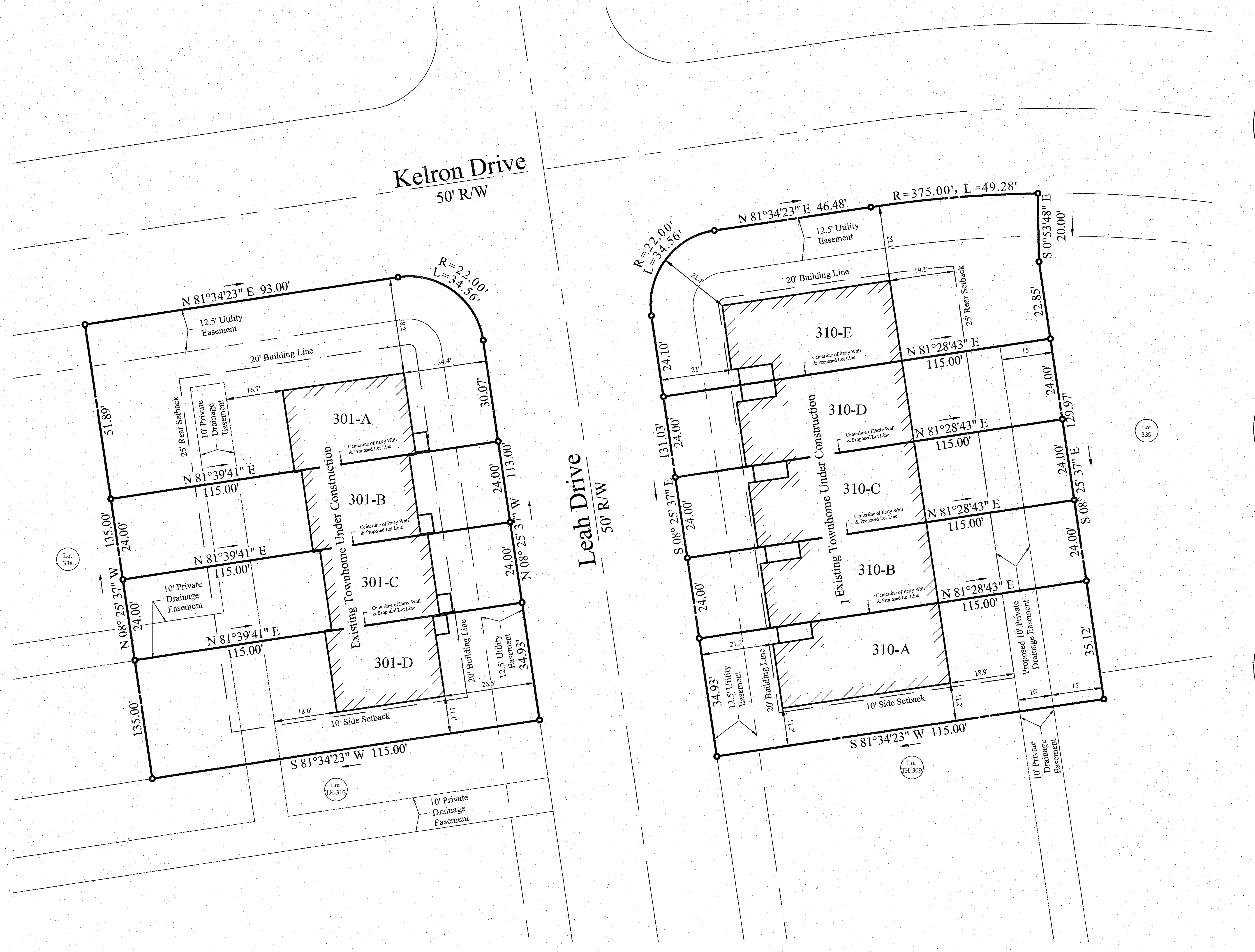

Parcel Table - Original Lots		
Lot Number	Lot Area (Sq.Ft.)	Lot Area (Acres)
TH-301	15,421.132	0.353
TH-310	17,476.021	0.400

Parcel Table - Proposed Lots/Units			
Unit Number	Lot Area (Sq.Ft.)	Lot Area (Acres)	Street Address
301-A	5,873.679	0.135	101 Leah Drive
301-B	2,760.003	0.063	103 Leah Drive
301-C	2,760.003	0.063	105 Leah Drive
301-D	4,027.447	0.092	107 Leah Drive
310-A	4,028.097	0.092	108 Leah Drive
310-B	2,760.004	0.063	106 Leah Drive
310-C	2,760.004	0.063	104 Leah Drive
310-D	2,760.004	0.063	102 Leah Drive
310-E	5,167.912	0.119	100 Leah Drive

LOCATION MAP 1" = 2000'

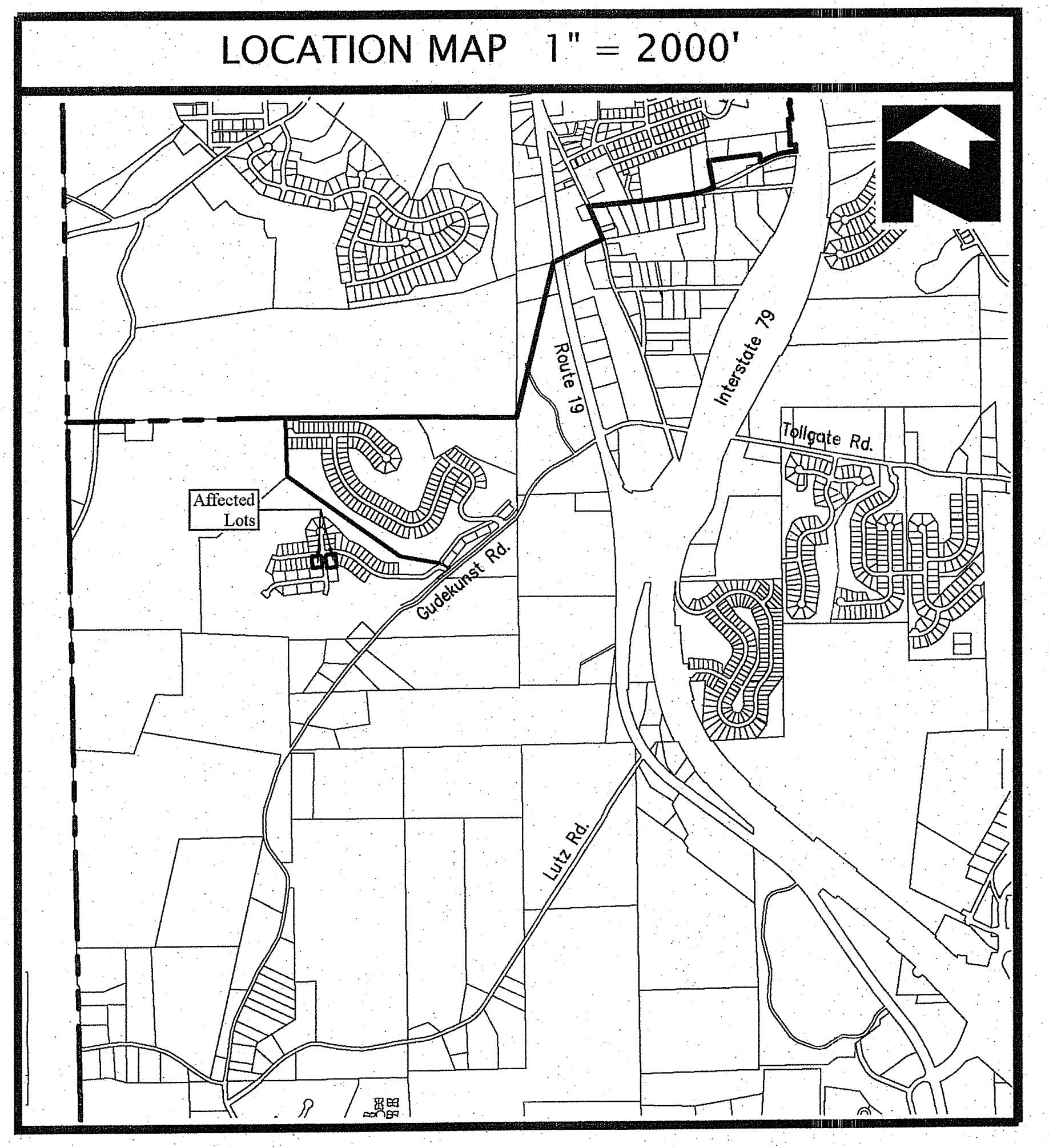

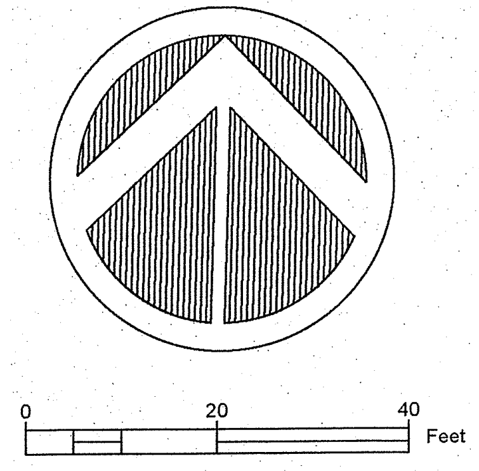

General Plan Notes

a. This plan is a re-subdivision of TH-301 & TH-310 of the Seneca-Bartos Property Neighborhood Planned Residential Subdivision - Phase 3 as recorded in Plan Book 430, Pages 12 to 15 to separate the original lot at the centerline of the structure party wall to allow for fee simple conveyance of individual units.

b. No additional units are proposed by this plan that were not originally planned for.

c. This plan is subject to any and all conditions of the previously approved plans as approved by Jackson Township.

d. If applicable, lines labeled to include (NR) are non-radial to the intersecting right of way line.

Property References

TH-301
Tax Parcel 180-S13-CT301-000
Instrument 202508200013203

TH-310
Tax Parcel 180-S13-CT310-0000
Instrument 202508070012309

PROPERTY OWNER / BUILDER
NVR
ONE PENN CENTER WEST, SUITE 220
PITTSBURGH, PA 15676
BUILT BY:
Ryan Homes

Drawing Number	1001-2528135
Drawing Scale	1"=20'
Date	August 29, 2025
Drawn By	JSS checked JAS
Revsions	
09/09/2025....Add drainage easement	

72000

Seneca Trails Amendment 6

Being a Re-subdivision of Lot TH-301 & TH-310 of the
Seneca-Bartos Property Neighborhood Planned Residential Subdivision - Phase 3
As recorded in Plan Book 430, Pages 12-15
Jackson Township, Butler County, Pennsylvania

Sperdute Land Surveying
A Division of Sheffler & Company
441 Mars-Valencia Rd, Suite 3C
Valencia, PA 16059
108 Deer Lane
Harmony, PA 16037
1712 Mount Nebo Road
Sewickley, PA 15143
724-452-4362 Info@SperduteSurveying.com
James A. Sperdute, RS # 24457-E

NVR, Inc.

By a resolution approved on the 30 day of October, 2025 the Board of Directors of the **NVR, Inc.** incorporated in the state of Virginia, owners of the land shown on the **Seneca Trails Amendment No. 6** adopted this plan as its plan of lots and irrevocably dedicated all streets and other property identified for dedication on the plan to Jackson Township. This adoption and dedication shall be binding upon the corporation and upon its successors and assigns.

NVR, Inc.

Signature of Officer Witnessing

David Hilton - VP
Printed Name & Title of Officer Witnessing

Signature of Authorized Officer

Vice President Peter Robertson
Printed Name & Title of Authorized Officer

Before me, the undersigned Notary Public in and for the Commonwealth of Pennsylvania and County of ~~Peter Robertson~~ Butler personally appeared Peter Robertson, VP of NVR, Inc. who stated that (he/she) is authorized to execute the above adoption and dedication on behalf of the corporation and was present at the meeting at which the action of the corporation was taken to adopt the plan and dedicate public property contained therein to Jackson Township.

Witness my hand and notarial seal this 30 day of October 2025.

My commission expires the 14 day of October 2027.

(Seal) Jennifer Lyn Sperdute Notary Public

Commonwealth of Pennsylvania - Notary Seal
Jennifer Lyn Sperdute, Notary Public
Butler County
My commission expires October 14, 2027
Commission number 1358573
Member, Pennsylvania Association of Notaries

I hereby certify that the title to the property contained in the **Seneca Trails Amendment No. 6** is in the name of NVR, Inc. and is recorded at **Instrument No. 202508200013203 & Instrument No. 202508070012309**. I further certify that there is no mortgage, lien, or other encumbrance against this property.

, VP
Witness

VP
Signature of Authorized Officer

JAMES ANTHONY SPERDUTE

Registered Surveyor

Surveyor

I hereby certify that, to the best of my information, knowledge and belief, the survey and plan shown hereon are correct and accurate to the standards required by the ordinances of Jackson Township.

10-27-2025
Date

James A. Sperdute, RS # 24457-E

Jackson Township Planning Director/Manager

Jackson Township agrees not to issue building permits until the "Planning Module for Land Development" has been approved in accordance with the regulations of the Pennsylvania Department of Environmental Protection.

11/14/2025
Date

Township Manager/Secretary

Approved by the Planning Director of Jackson Township this 23rd day of October, 2025, pursuant to Chapter 22, Subdivision and Land Development, of the Code of Jackson Township, as amended. The Planning Director of Jackson Township gives notice that in approving this plan for recording Jackson Township assumes no obligation to accept the dedication of any streets, land or public facilities and has no obligation to improve or maintain such streets, land or facilities.

Township Secretary

Nikki Colton
Planning Director

Jackson Township
Board of Supervisors

Jackson Township Board of Supervisors

Approved by the Board of Supervisors of Jackson Township this 10th day of November, 2025. The Board of Supervisors of Jackson Township gives notice that in approving this plan for recording Jackson Township assumes no obligation to accept the dedication of any streets, land or public facilities and has no obligation to improve or maintain such streets, land or facilities.

Township Secretary

Chairperson

This plat was delivered to applicant by Jackson Township on the 17th day of November 2025.

Township Manager/Secretary

Butler County
Planning Commission

Butler County Planning Commission

Reviewed by the Butler County Planning Commission on this 17th day of September 2025.

R. Henshaw MKG
Secretary

J. Hines MKG
Chairperson

Plan # 25211

Butler County Recorder of Deeds

Recorded in the office of the Recorder of Deeds of Butler County, Commonwealth of Pennsylvania, in Plan Book Volume 434, page(s) 35

Given under my hand and seal this 17th day of November, 2025.

Michele M. Mustello
Recorder of Deeds

MICHELE M. MUSTELLO
RECORDER OF DEEDS

My Commission Expires First Monday In January 2028

Butler County
Recorder of Deeds

PLAN BOOK	PAGE
434	35

1 of 1

OWNERS ADOPTION FOR CORPORATION (ZELIENOPLE BOROUGH)

BY RESOLUTION APPROVED ON THE 15th DAY OF OCTOBER, 2025, THE BOARD OF DIRECTORS OF THE GLADE RUN PROPERTIES, LLC, INCORPORATED IN THE STATE OF PENNSYLVANIA, OWNER OF THE LAND SHOWN ON THE GLADE RUN VILLAGE RESIDENTIAL SUBDIVISION - PHASE 3B HEREBY ADOPTS THIS PLAN AS ITS LAND DEVELOPMENT AND IRREVOCABLY DEDICATES ALL STREETS AND OTHER PROPERTY IDENTIFIED FOR DEDICATION ON THE PLAN TO BOROUGH OF ZELIENOPLE. THIS ADOPTION AND DEDICATION SHALL BE BINDING UPON THE CORPORATION AND UPON ITS SUCCESSORS AND ASSIGNS.

(SEAL)

Scarday, Treasurer
SIGNATURE AND TITLE
OF OFFICER WITNESSING

GLADE RUN PROPERTIES, LLC
Lucas B Piatt
SIGNATURE AND TITLE OF
AUTHORIZED OFFICER PRESIDENT

10/18/2025
DATE

ACKNOWLEDGMENT OF CORPORATE ADOPTION AND DEDICATION (ZELIENOPLE BOROUGH)

BEFORE ME, THE UNDERSIGNED NOTARY PUBLIC IN AND FOR THE COMMONWEALTH OF PENNSYLVANIA AND COUNTY OF BUTLER, PERSONALLY APPEARED Lucas B. Piatt, President OF THE GLADE RUN PROPERTIES, LLC, WHO STATED THAT HE IS AUTHORIZED TO EXECUTE THE ABOVE ADOPTION AND DEDICATION ON BEHALF OF THE CORPORATION AND WAS PRESENT AT THE MEETING AT WHICH THE ACTION OF THE CORPORATION WAS TAKEN TO ADOPT THE PLAN AND DEDICATE PUBLIC PROPERTY CONTAINED THEREIN TO ZELIENOPLE BOROUGH.

WITNESS MY HAND AND NOTARIAL SEAL THIS 18th DAY OF October, 2025.

MY COMMISSION EXPIRES THE 2nd DAY OF December, 2026

Tracy Young
NOTARY PUBLIC

Commonwealth of Pennsylvania - Notary Seal
TRACY L YOUNG - Notary Public
Allegheny County
My Commission Expires December 2, 2026
Commission Number 1195156

CERTIFICATION OF TITLE AND CONSENT OF MORTGAGEE

I HEREBY CERTIFY THAT THE TITLE TO THE PROPERTY CONTAINED IN THE GLADE RUN VILLAGE RESIDENTIAL SUBDIVISION - PHASE 3B IS IN THE NAME OF THE GLADE RUN PROPERTIES, LLC AND IS RECORDED IN INSTRUMENT(S) 202403250003977

James L Holcomb
WITNESS

Vice President
OWNER

Dollar Bank FSB MORTGAGEE OF THE PROPERTY CONTAINED IN THE GLADE RUN VILLAGE RESIDENTIAL SUBDIVISION - PHASE 3B CONSENTS TO THE RECORDING OF SAID PLAN AND TO THE DEDICATIONS AND ALL OTHER MATTERS APPEARING ON THE PLAN.

James L Holcomb
WITNESS

vice President
NAME, TITLE AND MORTGAGEE

NVR, INC., MORTGAGEE OF THE PROPERTY CONTAINED IN THE GLADE RUN VILLAGE RESIDENTIAL SUBDIVISION - PHASE 3B CONSENTS TO THE RECORDING OF SAID PLAN AND TO THE DEDICATIONS AND ALL OTHER MATTERS APPEARING ON THE PLAN.

WITNESS

VP
NAME, TITLE --- NVR, INC.

SURVEYORS CERTIFICATION

I HEREBY CERTIFY THAT, TO THE BEST OF MY INFORMATION, KNOWLEDGE AND BELIEF THE SURVEY, AND PLAN SHOWN HEREON ARE CORRECT AND ACCURATE TO THE STANDARDS REQUIRED BY THE ORDINANCES OF ZELIENOPLE BOROUGH.

10/15/2025
DATE
(SEAL)

GARY A SHEFFLER, JR. P.L.S.

ENGINEER CERTIFICATION

A. ENGINEERING REQUIREMENTS
I HEREBY CERTIFY THAT, TO THE BEST OF MY INFORMATION, KNOWLEDGE AND BELIEF THE PLAN SHOWN HEREON IS TRUE AND CORRECT TO THE ACCURACY AND ENGINEERING STANDARDS REQUIRED BY THE ORDINANCES OF ZELIENOPLE BOROUGH.

10/15/2025
DATE
(SEAL)

PE057446
ENGINEER - REG NO.

B. STORMWATER MANAGEMENT REQUIREMENTS
I HEREBY CERTIFY THAT, TO THE BEST OF MY INFORMATION, KNOWLEDGE AND BELIEF, THE STORM DRAINAGE FACILITIES SHOWN AND DESCRIBED HEREON ARE TRUE AND CORRECT TO THE ACCURACY AND STANDARDS REQUIRED BY THE ORDINANCES OF ZELIENOPLE BOROUGH.

10/15/2025
DATE
(SEAL)

PE057446
ENGINEER - REG NO.

BOROUGH ENGINEER'S CERTIFICATION
THIS PLAN WAS REVIEWED BY THE BOROUGH ENGINEER FOR CONFORMANCE WITH THE ZELIENOPLE BOROUGH SUBDIVISION AND LAND DEVELOPMENT ORDINANCE AND OTHER APPLICABLE BOROUGH ORDINANCES

11/5/2025
DATE
(SEAL)

Thomas L. Thompson
NAME

PE 043880-E
REGISTRATION NUMBER

NO BUILDING PERMITS WITHOUT APPROVED SEWAGE FACILITIES
ZELIENOPLE BOROUGH AGREES NOT TO ISSUE BUILDING PERMITS UNTIL THE "PLANNING MODULE FOR LAND DEVELOPMENT" HAS BEEN APPROVED IN ACCORDANCE WITH THE REGULATION OF THE PENNSYLVANIA DEPARTMENT OF ENVIRONMENTAL PROTECTION.

11/~~5~~/2025
DATE

BOROUGH MANAGER / SECRETARY

WESTERN BUTLER COUNTY AUTHORITY

THE UNDERSIGNED OWNER(S), INTENDING TO LEGALLY BIND THEMSELVES, ITSELF, AND ITS OR THEIR SUCCESSORS AND ASSIGNS, HEREBY GRANT AND DEDICATE TO THE WESTERN BUTLER COUNTY AUTHORITY, BUTLER COUNTY, PENNSYLVANIA, AND ITS RESPECTIVE SUCCESSORS AND ASSIGNS FOREVER, THE RIGHT TO INSTALL, CONSTRUCT, OPERATE, REPAIR, MAINTAIN, RELOCATE, AND REPLACE ALL NECESSARY FACILITIES FOR SANITARY SEWER COLLECTION AND CONVEYANCE TO, OVER, THROUGH, AND ACROSS EASEMENTS FOR UTILITIES AND/OR EASEMENTS FOR SANITARY SEWERS, INCLUDING THE RIGHT TO ASSIGN THE SAME, ALL WITH THE SAME FORCE AND EFFECT AS THOUGH SAID EASEMENTS HAD BEEN DULY ACQUIRED FOR SUCH PURPOSE BY CONDEMNATION, AND THE UNDERSIGNED HEREBY WAIVES FOR ITSELF, THEMSELVES, AND ITS OR THEIR ASSIGNS AND SUCCESSORS ANY AND ALL CLAIMS FOR DAMAGES FOR THE LAWFUL USE OF SUCH EASEMENTS FOR THE AFORESAID PURPOSES.

WITNESS

OWNER

EASEMENTS APPROVED BY THE WESTERN BUTLER COUNTY AUTHORITY ON THIS 17 DAY OF NOV, 2025

AUTHORITY REPRESENTATIVE

BOROUGH OF ZELIENOPLE COUNCIL APPROVAL CERTIFICATE

THE BOROUGH COUNCIL OF THE BOROUGH OF ZELIENOPLE HEREBY GIVES PUBLIC NOTICE THAT IN APPROVING THIS PLAN FOR RECORDING PURPOSES ONLY, THE BOROUGH OF ZELIENOPLE ASSUMES NO OBLIGATIONS, LEGAL OR OTHERWISE, EXPRESSED OR IMPLIED, EITHER TO ACCEPT SAID STREETS AS BOROUGH STREETS OR ROADS OR GRADE, PAVE AND CURB THE STREETS IN SAID PLAN, OR TO CONSTRUCT SEWERS THEREIN OR TO INSTALL ANY OTHER SUCH SERVICE ORDINARILY INSTALLED IN BOROUGH STREETS OR ROADS.

APPROVED BY THE BOROUGH COUNCIL OF THE BOROUGH OF ZELIENOPLE, THIS DAY 5th DAY OF November, 2025

BOROUGH SECRETARY

CHAIRPERSON

ZELIENOPLE BOROUGH PLANNING COMMISSION REVIEW CERTIFICATE

REVIEWED BY THE PLANNING COMMISSION OF THE BOROUGH OF ZELIENOPLE, THIS 5th DAY OF November, 2025.

SECRETARY

Douglas R. H
CHAIRPERSON

BUTLER COUNTY PLANNING COMMISSION REVIEW CERTIFICATE

REVIEWED BY THE BUTLER COUNTY PLANNING COMMISSION ON THIS 16th DAY OF April, 2025.

R. Henshaw MKG
SECRETARY

J. Hines MKG
CHAIRPERSON

Plan #25073

PROOF OF RECORDING

RECORDED IN THE OFFICE OF THE RECORDER OF DEEDS OF BUTLER COUNTY, COMMONWEALTH OF PENNSYLVANIA

IN PLAN BOOK VOLUME 434, PAGE(S) 36-39.

GIVEN UNDER MY HAND AND SEAL THIS 18th DAY OF November, 2025

Michele M Mustello
RECORDER OF DEEDS

HIGHWAY OCCUPANCY PERMIT NOTE:

A HIGHWAY OCCUPANCY PERMIT IS REQUIRED PURSUANT TO SECTION 420 OF THE ACT OF JUNE 1, 1945 (P.L. 1242, NO. 428), KNOWN AS THE "STATE HIGHWAY LAW," BEFORE DRIVEWAY ACCESS TO A STATE HIGHWAY IS PERMITTED.

MICHELE M. MUSTELLO
RECORDER OF DEEDS
My Commission Expires First Monday In January 2028

SITE DATA CHART	
ZONING DISTRICT CLASSIFICATION	VR - VILLAGE RESIDENTIAL
PERMITTED USE	VILLAGE RESIDENTIAL DEVELOPMENT
SUBDISTRICT CLASSIFICATION	4 SUBDISTRICTS (A, B, C & D)
MINIMUM PROVIDED LOT SIZE	7,600 S.F. (SINGLE FAMILY)
SUBDISTRICT DIMENSIONAL REQUIREMENTS	A, B, C & D
MINIMUM REQUIRED LOT WIDTH	62 FEET (@ FRONT SETBACK) (EXCEPT B)
MINIMUM REQUIRED FRONT YARDS	20 FEET
MINIMUM REQUIRED REAR YARDS	30 FEET
MINIMUM REQUIRED SIDE YARDS	10 FEET (LOT) - 15 FEET (CORNER)
MAXIMUM REQUIRED BUILDING HEIGHT	35 FEET
SUBDISTRICT	C
PERMITTED USE	SINGLE FAMILY DWELLINGS
MAXIMUM DWELLING UNITS	130
MINIMUM REQUIRED LOT WIDTH	52 OF 130 MUST HAVE 80 FEET @ SETBACK
MAXIMUM IMPERVIOUS COVERAGE	35% ENTIRE SUBDISTRICT
PHASE 3B SITE DATA CHART (SUB B & C)	
PROPOSED SINGLE FAMILY UNITS	51 SINGLE FAMILY UNITS
PROPOSED TOWNHOUSE UNITS	29 TOWNHOUSE UNITS
TOTAL PROPOSED UNITS	80 DWELLING UNITS
TOTAL PROPOSED ROADS	4,198 LF

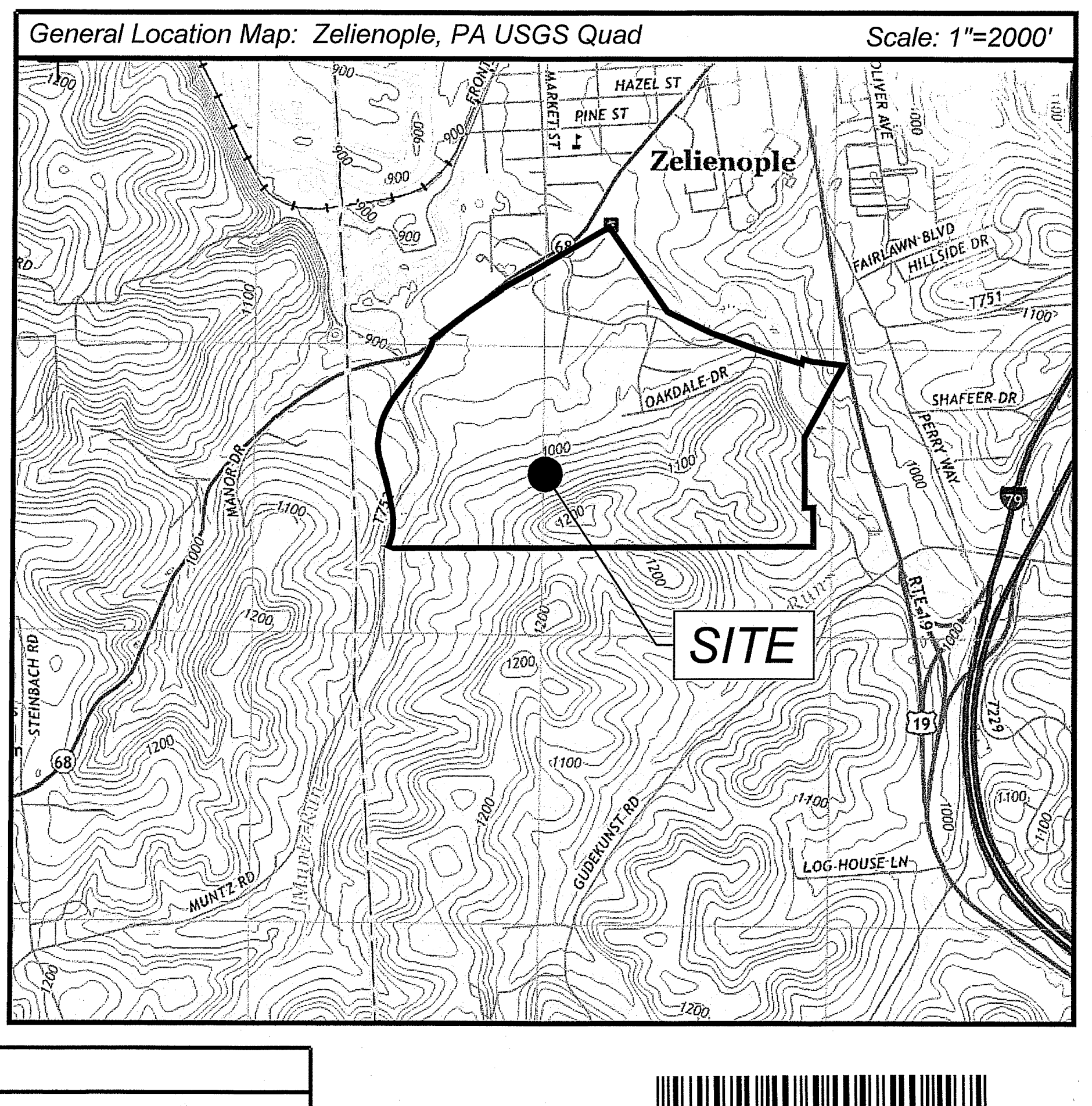

General Location Map: Zelienople, PA USGS Quad
Scale: 1"=2000'
Zelienople
SITE
STEINBACH RD
68

General Notes:

1. MERIDIAN SHOWN HEREON IS BASED GRID NORTH, AS OBSERVED IN PENNSYLVANIA SOUTH STATE PLANE COORDINATE SYSTEM, NAD 83.

2. THE UNDERGROUND UTILITIES SHOWN ON THIS SURVEY HAVE BEEN LOCATED FROM FIELD SURVEY INFORMATION, MARKINGS PROVIDED BY THE UTILITY COMPANIES AND EXISTING DRAWINGS OBTAINED FROM THE UTILITY COMPANIES. THE SURVEYOR MAKES NO GUARANTEE THAT THE UNDERGROUND UTILITIES SHOWN COMPRISE ALL SUCH UTILITIES IN THE AREA, EITHER IN SERVICE OR ABANDONED. THE SURVEYOR FURTHER DOES NOT WARRANT THAT THE UNDERGROUND UTILITIES SHOWN ARE IN THE EXACT LOCATION INDICATED, ALTHOUGH HE DOES CERTIFY THAT THEY ARE LOCATED AS ACCURATELY AS POSSIBLE FROM AVAILABLE INFORMATION. ALL UTILITIES SHOULD BE VERIFIED BY THE CONTRACTOR PRIOR TO ANY/ALL CONSTRUCTION PROJECTS.

3. HORIZONTAL CONTROL SHOWN HEREON IS PENNSYLVANIA SOUTH STATE PLANE NAD 83. VERTICAL CONTROL IS NAVD 88.

4. PORTIONS OF THE SUBJECT PREMISES LIES WITHIN THE 100 YEAR FLOODPLAIN, AS DEFINED ON THE FEMA FLOOD INSURANCE RATE MAP NO. 42019C0370D & 42019C0367D, DATED AUGUST 2, 2018

5. ANY TWENTY-FIVE (25) FEET WIDE SANITARY SEWER EASEMENT SHOWN ON THIS RECORDING PLAN SHALL BE DEFINED TO EXIST AS BEING CENTERED OVER THE FINAL INSTALLED LOCATION OF THE SANITARY SEWER FACILITIES.WHEN A SHARED UTILITY EASEMENT AND/OR PUBLIC RIGHT-OF-WAY ARE INVOLVED WITH THE SANITARY FACILITIES, A MINIMUM OF 12.5 FEET OF EASEMENT AND/OR PUBLIC RIGHT OF WAY SPACE SHALL EXIST ON EITHER SIDE OF THE FINAL INSTALLED LOCATION OF THE SANITARY FACILITIES.

Instr: 202511180019333
Pgs: 4 F: $165.00 11/18/2025 3:16 PM
Michele Mustello T20250016197
Butler County Recorder PA

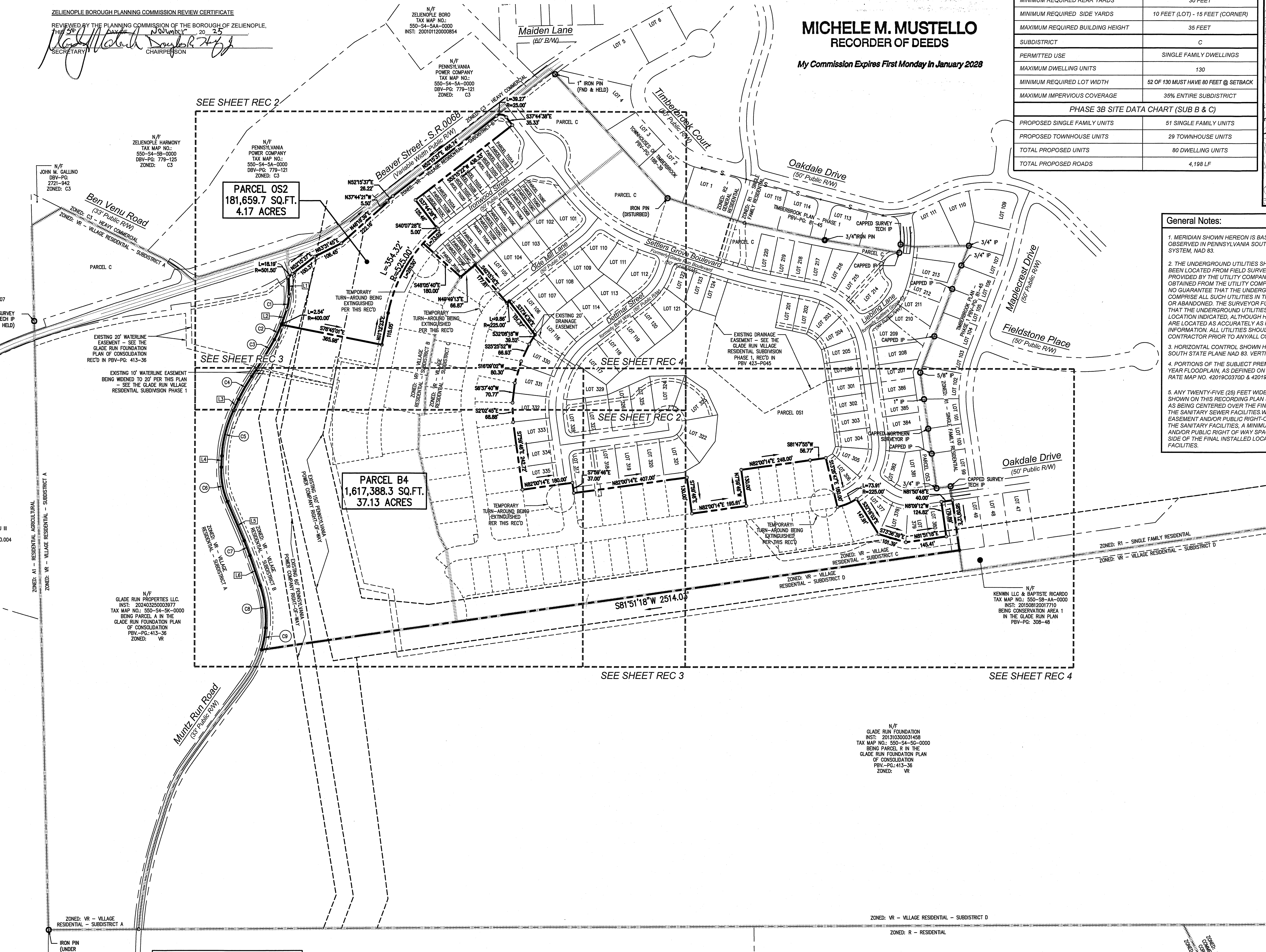

SEE SHEET REC 2
SEE SHEET REC 3
SEE SHEET REC 4
Beaver Street - S.R.0068 (Variable Width Public R/W)
Ben Venu Road (33' Public R/W)
Muntz Run Road (33' Public R/W)
Maiden Lane (60' R/W)
Timberbrook Court (50' Public R/W)
Oakdale Drive (50' Public R/W)
Maplecrest Drive (50' Public R/W)
Fieldstone Place (50' Public R/W)
Settlers Grove Boulevard
PARCEL OS2 181,659.7 SQ.FT. 4.17 ACRES
PARCEL B4 1,617,388.3 SQ.FT. 37.13 ACRES
PARCEL C
PARCEL OS1
S81°51'18"W 2514.03'
1" IRON PIN (FND & HELD)
CAPPED SURVEY TECH IP (FND & HELD)
IRON PIN (UNDER FALLEN TREE)
3/4" IP (FND & HELD)
N/F ZELIENOPLE BORO TAX MAP NO.: 550-S4-5AA-0000 INST: 200101120000854
N/F PENNSYLVANIA POWER COMPANY TAX MAP NO.: 550-S4-5A-0000 DBV-PG: 779-121 ZONED: C3
N/F GALLINO,JOHN M & MARY C INST: 3012336 TAX MAP NO.: 68-125-0140.007 ZONED: B1
N/F BETTENCOURT,LAWRENCE J III INST: 3012336 TAX MAP NO.: 68-135-0110.004 ZONED: A1
N/F KENWIN LLC & BAPTISTE RICARDO TAX MAP NO.: 550-S8-AA-0000 INST: 201508120017710 BEING CONSERVATION AREA 1 IN THE GLADE RUN PLAN PBV-PG: 308-48 ZONED: R1
N/F GLADE RUN FOUNDATION TAX MAP NO.: 550-S4-5J-0000 INST: 201310300031458 BEING LOT 4 IN THE GLADE RUN PLAN PBV-PG: 308-48 ZONED: R2
N/F SCOTT R. BONZO INST: 201303150007711 TAX MAP NO.: 180-4F123-1 ZONED: R
N/F SENECA TRAILS, LLC INST: 202008210017405 TAX MAP NO.: 180-4F123-2A-0000 BEING PARCEL A IN THE LUTZ FAMILY FARM SIMPLE SUB PBV-PG: 386-17 ZONED: R
ZONED: VR - VILLAGE RESIDENTIAL - SUBDISTRICT D
ZONED: R - RESIDENTIAL

PLAN BOOK	PAGE
434	36

BOROUGH ENGINEER — THOMAS L THOMPSON, ENGINEER 043880-E

REGISTERED ENGINEER — GARY A. SHEFFLER, JR, ENGINEER PE057446

BOROUGH OF ZELIENOPLE PLANNING COMMISSION

BUTLER COUNTY RECORDER OF DEEDS

REGISTERED SURVEYOR — GARY A. SHEFFLER, JR, LAND SURVEYOR No. SU075518

BOROUGH OF ZELIENOPLE COUNCIL

MUNTZ RUN ROAD CENTERLINE CURVE TABLE				
CURVE NO.	RADIUS	LENGTH	CH BEARING	CH LENGTH
C1	125.00'	47.76'	N9°02'59"E	47.47'
C2	400.00'	61.04'	N24°22'06"E	60.98'
C3	1600.00'	153.97'	N31°29'49"E	153.91'
C4	600.00'	93.88'	S29°46'16"W	93.79'
C5	425.00'	167.23'	S14°00'57"W	166.15'
C6	275.00'	125.21'	S10°18'02"E	124.13'
C7	800.00'	56.91'	N21°18'26"W	56.90'
C8	371.52'	153.20'	N7°19'53"W	152.12'
C9	371.54'	79.35'	N10°36'08"E	79.20'

MUNTZ RUN ROAD CENTERLINE LINE TABLE		
LINE NO.	BEARING	DISTANCE
L1	N1°53'50"W	69.41'
L2	N19°59'47"E	54.45'
L3	N25°17'18"E	44.73'
L4	N2°44'36"E	40.13'
L5	N23°20'41"W	150.96'
L6	N19°16'11"W	112.64'
L7	N35°59'23"E	344.82'
L8	N17°06'51"E	120.96'

811 Know what's **below.** **Call** before you dig.

POCS SER. #: 20191992518

THE LOCATIONS OF EXISTING UNDERGROUND UTILITIES ARE SHOWN IN AN APPROXIMATE WAY ONLY AND HAVE NOT BEEN INDEPENDENTLY VERIFIED BY THE OWNER OR ITS REPRESENTATIVE. THE CONTRACTOR SHALL DETERMINE THE EXACT LOCATION OF ALL EXISTING UTILITIES BEFORE COMMENCING WORK, AND AGREES TO BE FULLY RESPONSIBLE FOR ANY AND ALL DAMAGES WHICH MIGHT BE OCCASIONED BY THE CONTRACTOR'S FAILURE TO EXACTLY LOCATE AND PRESERVE ANY AND ALL UNDERGROUND UTILITIES.

NORTH

Horizontal Scale
200 0 200 400
(Feet)
1 inch = 200 ft.

Date:	Revision Description:	By:
03/14/2025	REVISED PHASE 3 & 4 SUBMISSION	AGM
04/14/2025	REVISED ROAD NAMES	AGM
10/15/2025	ADDED PRIVATE DRAINAGE EASEMENTS	AGM

Professional Seal

Prepared By:

Sheffler & Company, Inc.
ENGINEERING • SURVEYING

1712 Mount Nebo Road
Sewickley, PA 15143

Office Phone: 412-219-4509
Email: Info@ShefflerCo.com

Glade Run Village Residential Subdivision - Phase 3B

Prepared For:
Glade Run Properties

Situate In:
Zelienople Borough, Butler County, Pennsylvania

Being a Subdivision of Parcel OS2, as shown in the Glade Run Village Residential Subdivision - Phase 1, recorded in PBV 423, pgs. 45-46 & Parcel B4, as shown in the Glade Run Village Residential Subdivision - Phase 3A, recorded in PBV 428 Pgs. 44-45.

Glade Run Properties
Attn: James Holcomb
380 Southpointe Blvd., Suite 400
Canonsburg, Pa 15317
Phone: 724-229-8800

DRAWING SCALE:	1" = 200'	DESIGNED BY:	AGM
DATE ISSUED:	1/16/2025	REVIEWED BY:	MWS/GAS
PROJECT JOB#:	4072	FIELD BOOK #:	4072
CADD#: 4072 - GLADE RUN - REC3B - PH 3B SUBDIV			

Sheet No.
REC 1

N/F
ZELIENOPLE HARMONY
TAX MAP NO.:
550-S4-5B-0000
DBV-PG: 779-125
ZONED: C3
N/F
PENNSYLVANIA
POWER COMPANY
TAX MAP NO.:
550-S4-5A-0000
DBV-PG: 779-121
ZONED: C3
Beaver Street - S.R.0068
(Variable Width Public R/W)
ZONED: C3 - HEAVY COMMERCIAL
ZONED: VR - VILLAGE RESIDENTIAL - SUBDISTRICT B
ZONED: VR - VILLAGE RESIDENTIAL - SUBDISTRICT C
N48°18'39"E 222.16'
N37°44'21"W 5.50'
N52°15'37"E 28.22'
N63°31'45"E 106.45'
N52°15'37"E 100.37'
87.96'
N52°15'37"E 466.74'
L=39.27' R=25.00'
S37°44'38"E 38.33'
PROPOSED VARIABLE WIDTH SNOW REMOVAL / MONUMENT SIGN EASEMENT
PARCEL C
PARCEL OS2-R
177,016.7 SQ.FT.
4.06 ACRES
S52°15'22"W 436.33'
S37°44'38"E 125.46'
L=73.03'
PARCEL T101A
PARCEL T101B
PARCEL T101C
PARCEL T101D
PARCEL T101E
PARCEL T102A
PARCEL T102B
PARCEL T102C
PARCEL T102D
PARCEL T103A
PARCEL T103B
PARCEL T103C
PARCEL T104A
PARCEL T104B
PARCEL T104C
PARCEL T104D
PARCEL T104E
PARCEL T105A
PARCEL T105B
PARCEL T105C
PARCEL T105D
PARCEL T105E
PARCEL T106A
PARCEL T106B
PARCEL T106C
PARCEL T106D
PARCEL T106E
Timberbrook Court
(50' Public R/W)
LOT 3
LOT 2
TOWNHOUSES OF TIMBERBROOK
PBV-PG: 188-39
IRON PIN
(DISTURBED)
LOT 101
LOT 102
LOT 103
LOT 104
LOT 105
LOT 106
LOT 107
LOT 108
LOT 109
LOT 110
LOT 111
LOT 112
LOT 113
LOT 114
LOT 115
LOT 116
LOT 117
LOT 118
LOT 119
LOT 120
LOT 121
LOT 122
Olde Mill Lane
(50' Public R/W)
Settlers Grove Boulevard
Formerly Glade Run Boulevard
- (50' Public R/W)
Dettmar Street
formerly Buhl Way - (50' Public R/W)
Ironwood Street
(50' Public R/W)
L=18.19'
R=501.50'
12.41'
PROPOSED 12.5' UTILITY EASEMENT
N1°53'50"W 69.41'
87.06'
S1°53'50"E
MUNTZ RUN ROAD
DEDICATION TO R/W
35,446.9 SQ.FT. - 0.81 ACRES
L=47.76' R=125.00'
L=57.32' R=150.00'
N19°59'47"E 54.45'
S19°59'47"W 54.45'
53.14'
1.31'
L=61.04' R=400.00'
L=64.85' R=425.00'
L=156.38' R=1625.00'
L=153.97' R=1600.00'
L=93.88' R=600.00'
L=89.97' R=575.00'
N25°17'18"E 44.73'
S25°17'18"W 44.73'
EXISTING 150' PENNSYLVANIA POWER COMPANY RIGHT-OF-WAY
EXISTING 60' PENNSYLVANIA POWER COMPANY RIGHT-OF-WAY
S78°45'01"E
340.68'
PARCEL B5
576,441.5 SQ.FT.
13.23 ACRES
EXISTING 20' WATERLINE EASEMENT - SEE THE GLADE RUN FOUNDATION PLAN OF CONSOLIDATION REC'D IN PBV-PG: 413-36
EXISTING 10' WATERLINE EASEMENT BEING WIDENED TO 20' PER THIS PLAN - SEE THE GLADE RUN VILLAGE RESIDENTIAL SUBDIVISION PHASE 1
PROPOSED 20' WIDE WATERLINE EASEMENT
PROPOSED 25' SANITARY SEWER EASEMENT FOR FORCE MAIN
PROPOSED 10' PRIVATE DRAINAGE EASEMENT
VARIABLE WIDTH DRAINAGE EASEMENT
L=354.32' R=525.00'
L=281.30'
115.05'
N11°12'23"E
335.08' TOTAL
N11°12'23"E 335.08'
S11°12'23"W 220.03'
87.05'
PT: 7+97.54
PC: 11+32.62
PARCEL 301-A
5,324.2 SQ.FT. - 0.12 ACRES
PARCEL 301-B
3,629.3 SQ.FT. - 0.08 ACRES
PARCEL 301-C
3,623.9 SQ.FT. - 0.08 ACRES
PARCEL 301-D
3,618.5 SQ.FT. - 0.08 ACRES
PARCEL 301-E
5,640.4 SQ.FT. - 0.13 ACRES
N10°48'33"E 172.55'
S78°47'37"E 130.00'
N78°47'37"W 129.72'
N78°47'37"W 129.52'
N78°47'37"W 129.33'
N78°47'37"W 129.13'
10' SIDE SETBACK (TYP.)
25' FRONT SETBACK (TYP.)
30' REAR SETBACK (TYP.)
PARCEL OS6
30,265.8 SQ.FT.
0.69 ACRES
PROPOSED 25' SANITARY SEWER EASEMENT
PROPOSED 20' DRAINAGE EASEMENT
PROPOSED 12.5' UTILITY EASEMENT
N1°27'52"E 98.67'
PARCEL 304-A
4,818.3 SQ.FT. - 0.11 ACRES
PARCEL 304-B
3,120.0 SQ.FT. - 0.07 ACRES
PARCEL 304-C
3,120.0 SQ.FT. - 0.07 ACRES
PARCEL 304-D
3,120.0 SQ.FT. - 0.07 ACRES
PARCEL 304-E
4,810.0 SQ.FT. - 0.11 ACRES
S78°47'37"E 130.00'
N78°47'37"W 130.69'
PARCEL 305-A
4,840.5 SQ.FT. - 0.11 ACRES
PARCEL 305-B
3,181.8 SQ.FT. - 0.07 ACRES
PARCEL 305-C
3,192.5 SQ.FT. - 0.07 ACRES
PARCEL 305-D
4,680.2 SQ.FT. - 0.11 ACRES
S78°11'55"E 131.99'
S78°11'55"E 133.00'
S78°11'55"E 132.84'
S68°09'50"E 130.00'
L=16.93'
PARCEL 306-A
4,693.1 SQ.FT. - 0.11 ACRES
PARCEL 306-B
3,230.9 SQ.FT. - 0.07 ACRES
PARCEL 306-C
3,245.5 SQ.FT. - 0.07 ACRES
PARCEL 306-D
3,230.9 SQ.FT. - 0.07 ACRES
PARCEL 306-E
4,693.1 SQ.FT. - 0.11 ACRES
S58°07'45"E 133.91'
S58°07'45"E 135.13'
L=254.51' R=475.00'
S48°05'40"E 180.00'
50.00'
PROPOSED 10' PRIVATE DRAINAGE EASEMENT
EXISTING 20' DRAINAGE EASEMENT
N49°49'13"E 66.87'
S40°15'16"E 177.61'
127.61'
120.22' TOTAL
S31°52'15"W 78.25'
108.50' TOTAL
N14°20'03"E 77.89'
122.00' TOTAL
N11°12'23"E 80.00'
S9°33'05"W 63.04'
LOT 348
11,823.0 SQ.FT.
0.27 ACRES
LOT 349
11,856.3 SQ.FT.
0.27 ACRES
N55°34'45"W 129.19'
LOT 350
11,031.9 SQ.FT.
0.25 ACRES
N70°54'13"W 129.58'
LOT 351
10,400.0 SQ.FT.
0.24 ACRES
N78°47'37"W 130.00'
LOT 352
10,794.6 SQ.FT.
0.25 ACRES
N83°26'09"W 130.00'
LOT 353
11,194.8 SQ.FT.
0.26 ACRES
S11°12'23"W 162.33'
N11°12'23"E 162.33'
L=184.97' R=275.00'
L=142.44' R=425.00'
L=125.68' R=375.00'
L=151.35' R=225.00'
L=9.86'
R=225.00'
S37°44'38"E 151.37'
LOT 347
12,647.3 SQ.FT.
0.29 ACRES
S69°27'51"E 154.42'
S32°08'18"W 39.52'
LOT 346
11,491.6 SQ.FT.
0.26 ACRES
66.93'
S25°25'52"W
S78°47'37"E 138.90'
LOT 345
10,835.5 SQ.FT.
0.25 ACRES
80.30'
S16°09'02"W
S78°47'37"E 131.98'
LOT 344
11,047.3 SQ.FT.
0.25 ACRES
70.77'
S6°37'40"W
S88°44'45"E 134.01'
PT: 6+14.60
PC: 7+76.93
LOT 329
LOT 330
LOT 331
LOT 332
LOT 324
LOT 325
EXISTING 12.5' UTILITY EASEMENT
EXISTING 30'X15' SNOW REMOVAL EASEMENT
MATCH SHEET REC 2
MATCH SHEET REC 3
MATCH SHEET REC 2
MATCH SHEET REC 4
MATCH SHEET REC 2
MATCH SHEET REC 3

PLAN BOOK	PAGE
434	37

811 Know what's **below.** **Call** before you dig.

POCS SER. #: 20191992518

THE LOCATIONS OF EXISTING UNDERGROUND UTILITIES ARE SHOWN IN AN APPROXIMATE WAY ONLY AND HAVE NOT BEEN INDEPENDENTLY VERIFIED BY THE OWNER OR ITS REPRESENTATIVE. THE CONTRACTOR SHALL DETERMINE THE EXACT LOCATION OF ALL EXISTING UTILITIES BEFORE COMMENCING WORK, AND AGREES TO BE FULLY RESPONSIBLE FOR ANY AND ALL DAMAGES WHICH MIGHT BE OCCASIONED BY THE CONTRACTOR'S FAILURE TO EXACTLY LOCATE AND PRESERVE ANY AND ALL UNDERGROUND UTILITIES.

NORTH

Horizontal Scale

50 0 50 100

(Feet)
1 inch = 50 ft.

Date:	Revision Description:	By:
03/14/2025	REVISED PHASE 3 & 4 SUBMISSION	AGM
04/14/2025	REVISED ROAD NAMES	AGM
10/15/2025	ADDED PRIVATE DRAINAGE EASEMENTS	AGM
11/17/2025	REVISED SANITARY SEWER EASEMENT	AGM

Professional Seal

Prepared By:

Sheffler & Company, Inc.
ENGINEERING • SURVEYING

1712 Mount Nebo Road
Sewickley, PA 15143

Office Phone: 412-219-4509
Email: Info@ShefflerCo.com

Glade Run Village Residential Subdivision - Phase 3B

Prepared For:

Glade Run Properties

Situate In:

Zelienople Borough, Butler County, Pennsylvania

Being a Subdivision of Parcel OS2, as shown in the Glade Run Village Residential Subdivision - Phase 1, recorded in PBV 423, pgs. 45-46 & Parcel B4, as shown in the Glade Run Village Residential Subdivision - Phase 3A, recorded in PBV 428 Pgs. 44-45.

Glade Run Properties
Attn: James Holcomb
380 Southpointe Blvd., Suite 400
Canonsburg, Pa 15317
Phone: 724-229-8800

DRAWING SCALE:	1" = 50'	DESIGNED BY:	AGM
DATE ISSUED:	1/16/2025	REVIEWED BY:	MWS/GAS
PROJECT JOB#:	4072	FIELD BOOK #:	4072

CADD#: 4072 - GLADE RUN - REC3B - PH 3B SUBDIV

Sheet No.

REC 2

MATCH SHEET REC 2
MATCH SHEET REC 3
MATCH SHEET REC 4
MUNTZ RUN ROAD DEDICATION TO R/W 35,446.9 SQ.FT. – 0.81 ACRES
PARCEL B5 576,441.5 SQ.FT. 13.23 ACRES
PARCEL OS4 194,047.1 SQ.FT. 4.45 ACRES
PARCEL OS6 30,265.8 SQ.FT. 0.69 ACRES
PARCEL 301-A 3,324.2 SQ.FT. - 0.12 ACRES
PARCEL 301-B 3,623.3 SQ.FT. - 0.08 ACRES
PARCEL 301-C 3,623.9 SQ.FT. - 0.08 ACRES
PARCEL 301-D 3,618.5 SQ.FT. - 0.08 ACRES
PARCEL 301-E 5,640.4 SQ.FT. - 0.13 ACRES
PARCEL 302-A 6,011.5 SQ.FT. - 0.14 ACRES
PARCEL 302-B 3,456.2 SQ.FT. - 0.08 ACRES
PARCEL 302-C 3,434.1 SQ.FT. - 0.08 ACRES
PARCEL 302-D 3,453.8 SQ.FT. - 0.08 ACRES
PARCEL 302-E 5,632.8 SQ.FT. - 0.13 ACRES
PARCEL 303-E 5,133.6 SQ.FT. - 0.12 ACRES
PARCEL 303-D 3,236.8 SQ.FT. - 0.07 ACRES
PARCEL 303-C 3,249.7 SQ.FT. - 0.07 ACRES
PARCEL 303-B 3,233.4 SQ.FT. - 0.07 ACRES
PARCEL 303-A 4,693.9 SQ.FT. - 0.11 ACRES
LOT 352 10,794.6 SQ.FT. 0.25 ACRES
LOT 353 11,194.8 SQ.FT. 0.26 ACRES
LOT 354 13,193.3 SQ.FT. 0.30 ACRES
LOT 355 12,879.0 SQ.FT. 0.30 ACRES
LOT 356 12,290.1 SQ.FT. 0.28 ACRES
LOT 357 11,660.9 SQ.FT. 0.27 ACRES
LOT 358 11,616.2 SQ.FT. 0.27 ACRES
LOT 345 10,835.5 SQ.FT. 0.25 ACRES
LOT 344 11,047.3 SQ.FT. 0.25 ACRES
LOT 343 10,935.9 SQ.FT. 0.25 ACRES
LOT 342 10,400.0 SQ.FT. 0.24 ACRES
LOT 341 10,400.0 SQ.FT. 0.24 ACRES
LOT 340 10,400.0 SQ.FT. 0.24 ACRES
LOT 339 10,400.0 SQ.FT. 0.24 ACRES
LOT 338 11,175.9 SQ.FT. 0.26 ACRES
LOT 336 10,400.0 SQ.FT. 0.24 ACRES
LOT 337 11,175.9 SQ.FT. 0.26 ACRES
LOT 316 11,175.9 SQ.FT. 0.26 ACRES
LOT 315 10,400.0 SQ.FT. 0.24 ACRES
LOT 314 10,400.0 SQ.FT. 0.24 ACRES
LOT 313 10,400.0 SQ.FT. 0.24 ACRES
LOT 312 10,400.0 SQ.FT. 0.24 ACRES
LOT 359 9,680.0 SQ.FT. 0.22 ACRES
LOT 360 8,060.0 SQ.FT. 0.19 ACRES
LOT 361 8,060.0 SQ.FT. 0.19 ACRES
LOT 362 8,060.0 SQ.FT. 0.19 ACRES
LOT 363 8,060.0 SQ.FT. 0.19 ACRES
LOT 364 8,060.0 SQ.FT. 0.19 ACRES
LOT 365 8,060.0 SQ.FT. 0.19 ACRES
LOT 366 8,060.0 SQ.FT. 0.19 ACRES
LOT 367 8,060.0 SQ.FT. 0.19 ACRES
LOT 368 8,060.0 SQ.FT. 0.19 ACRES
LOT 369 8,060.0 SQ.FT. 0.19 ACRES
Olde Mill Lane (50' Public R/W)
Dettmar Street formerly Bluff Way (50' Public R/W)
Sabina Lane formerly Harmony Way (50' Public R/W)
Settlers Grove Boulevard Formerly Glade Run Boulevard (50' Public R/W)
TEMPORARY TURNAROUND
EXISTING 150' PENNSYLVANIA POWER COMPANY RIGHT-OF-WAY
EXISTING 20' WATERLINE EASEMENT – SEE THE GLADE RUN FOUNDATION PLAN OF CONSOLIDATION REC'D IN PBV-PG: 413-36
EXISTING 10' WATERLINE EASEMENT BEING WIDENED TO 20' PER THIS PLAN – SEE THE GLADE RUN VILLAGE RESIDENTIAL SUBDIVISION PHASE 1
PROPOSED 20' WIDE WATERLINE EASEMENT
PROPOSED 25' SANITARY SEWER EASEMENT FOR FORCE MAIN
PROPOSED 12.5' UTILITY EASEMENT
PROPOSED 10' PRIVATE DRAINAGE EASEMENT
PROPOSED 20' DRAINAGE EASEMENT
PROPOSED 30'X15' SNOW REMOVAL EASEMENT
S81°51'18"W 2514.03'
S82°00'14"W 646.08'
N82°00'14"E 1339.35'
S82°00'14"W 382.00'
N82°00'14"E 407.00'
S82°00'14"W 210.00'
N82°00'14"E 180.00'
S80°26'06"W 180.00'
S81°11'59"W 130.00'
S7°59'46"E 414.49'
N7°59'46"W 414.49'
N13°07'57"W 139.97'
N13°38'05"W 173.05'
S25°17'18"W 44.73'
S2°44'36"W 150.96'
S23°20'41"E 150.96'
S19°16'11"E 112.67'
N/F GLADE RUN FOUNDATION INST: 201310300031458 TAX MAP NO.: 550-S4-5G-0000 BEING PARCEL R IN THE GLADE RUN FOUNDATION PLAN OF CONSOLIDATION PBV.-PG.: 413-36 ZONED: VR

PLAN BOOK	PAGE
434	38

811 Know what's **below.** **Call** before you dig.

POCS SER. #: 20191992518

THE LOCATIONS OF EXISTING UNDERGROUND UTILITIES ARE SHOWN IN AN APPROXIMATE WAY ONLY AND HAVE NOT BEEN INDEPENDENTLY VERIFIED BY THE OWNER OR ITS REPRESENTATIVE. THE CONTRACTOR SHALL DETERMINE THE EXACT LOCATION OF ALL EXISTING UTILITIES BEFORE COMMENCING WORK, AND AGREES TO BE FULLY RESPONSIBLE FOR ANY AND ALL DAMAGES WHICH MIGHT BE OCCASIONED BY THE CONTRACTOR'S FAILURE TO EXACTLY LOCATE AND PRESERVE ANY AND ALL UNDERGROUND UTILITIES.

NORTH

Horizontal Scale

50 0 50 100

(Feet)

1 inch = 50 ft.

Date:	Revision Description:	By:
03/14/2025	REVISED PHASE 3 & 4 SUBMISSION	AGM
04/14/2025	REVISED ROAD NAMES	AGM
10/15/2025	ADDED PRIVATE DRAINAGE EASEMENTS	AGM
11/17/2025	REVISED SANITARY SEWER EASEMENT	AGM

Professional Seal

Prepared By:

Sheffler & Company, Inc.
ENGINEERING • SURVEYING

1712 Mount Nebo Road
Sewickley, PA 15143

Office Phone: 412-219-4509
Email: Info@ShefflerCo.com

Glade Run Village Residential Subdivision - Phase 3B

Prepared For:

Glade Run Properties

Situate In:

Zelienople Borough, Butler County, Pennsylvania

Being a Subdivision of Parcel OS2, as shown in the Glade Run Village Residential Subdivision - Phase 1, recorded in PBV 423, pgs. 45-46 & Parcel B4, as shown in the Glade Run Village Residential Subdivision - Phase 3A, recorded in PBV 428 Pgs. 44-45.

DRAWING SCALE:	1" = 50'	DESIGNED BY:	AGM
DATE ISSUED:	1/16/2025	REVIEWED BY:	MWS/GAS
PROJECT JOB#:	4072	FIELD BOOK #:	4072

CADD#: 4072 - GLADE RUN - REC3B - PH 3B SUBDIV

Glade Run Properties
Attn: James Holcomb
380 Southpointe Blvd., Suite 400
Canonsburg, Pa 15317
Phone: 724-229-8800

Sheet No.

REC 3

MATCH SHEET REC 3
MATCH SHEET REC 4
Sabina Lane
formerly Harmony Way
(50' Public R/W)
Settlers Grove Boulevard
Formerly Glade Run Boulevard
(50' Public R/W)
Oakdale Drive
(50' Public R/W)
PARCEL OS1
PARCEL OS4
194,047.1 SQ.FT.
4.45 ACRES
LOT 307
8,190.8 SQ.FT.
0.19 ACRES
LOT 308
8,060.0 SQ.FT.
0.19 ACRES
LOT 309
8,060.0 SQ.FT.
0.19 ACRES
LOT 310
8,060.0 SQ.FT.
0.19 ACRES
LOT 311
8,060.0 SQ.FT.
0.19 ACRES
LOT 312
10,400.0 SQ.FT.
0.24 ACRES
LOT 313
10,400.0 SQ.FT.
0.24 ACRES
LOT 314
10,400.0 SQ.FT.
0.24 ACRES
LOT 315
10,400.0 SQ.FT.
0.24 ACRES
LOT 316
11,175.9 SQ.FT.
0.26 ACRES
LOT 366
LOT 367
8,060.0 SQ.FT.
0.19 ACRES
LOT 368
8,060.0 SQ.FT.
0.19 ACRES
LOT 369
8,060.0 SQ.FT.
0.19 ACRES
LOT 370
8,060.0 SQ.FT.
0.19 ACRES
LOT 371
8,060.0 SQ.FT.
0.19 ACRES
LOT 372
8,060.0 SQ.FT.
0.19 ACRES
LOT 373
8,060.0 SQ.FT.
0.19 ACRES
LOT 374
8,060.0 SQ.FT.
0.19 ACRES
LOT 375
9,170.9 SQ.FT.
0.21 ACRES
LOT 376
10,435.5 SQ.FT.
0.24 ACRES
N82°00'14"E 248.00'
S81°47'55"W 56.77'
S13°26'47"E 180.00'
N7°59'46"W 130.00'
S82°00'14"W 300.50'
N82°00'14"E 407.00'
S7°59'46"E 130.00'
N82°00'14"E 195.61'
878.11' TOTAL
S82°00'14"W 382.00'
N82°00'14"E 1339.35'
S82°00'14"W 267.37'
S82°00'14"W 124.00'
L=73.91' R=225.00'
S32°16'03"E 147.91'
93.61'
S72°44'55"W
S73°36'39"E 101.39'
N81°51'18"E 145.41'
N81°50'48"E 40.00'
N8°09'12"W 124.82'
S8°09'12"E 179.89'
S81°51'18"W 2514.03'
EXISTING DRAINAGE EASEMENT - SEE THE GLADE RUN VILLAGE RESIDENTIAL SUBDIVISION PHASE 1, REC'D IN PBV 423-PG45
EXISTING 10' PRIVATE DRAINAGE EASEMENT
EXISTING 30'X15' SNOW REMOVAL EASEMENT
EXISTING 12.5' UTILITY EASEMENT
EXISTING 20' DRAINAGE EASEMENT
PROPOSED 10' PRIVATE DRAINAGE EASEMENT
PROPOSED 12.5' UTILITY EASEMENT
PROPOSED 30'X15' SNOW REMOVAL EASEMENT
30' REAR SETBACK (TYP.)
25' FRONT SETBACK (TYP.)
10' SIDE SETBACK (TYP.)
EXISTING VARIABLE WIDTH DRAINAGE EASEMENT
EXISTING 25' SANITARY SEWER EASEMENT
EXISTING 150' PENNSYLVANIA POWER COMPANY RIGHT-OF-WAY
ZONED: R1 - SINGLE FAMILY RESIDENTIAL
ZONED: VR - VILLAGE RESIDENTIAL - SUBDISTRICT C
ZONED: VR - VILLAGE RESIDENTIAL - SUBDISTRICT D
5/8" IP
1" IP
CAPPED NORTHERN SURVEYOR IP
CAPPED IP
3/4" IP
CAPPED SURVEY TECH IP
PARCEL OS3
LOT 206
LOT 207
LOT 301
LOT 302
LOT 303
LOT 304
LOT 305
LOT 306
LOT 377
LOT 378
LOT 379
LOT 380
LOT 381
LOT 382
LOT 383
LOT 384
LOT 385
LOT 386
LOT 322
LOT 323
LOT 324
LOT 325
LOT 326
LOT 327
LOT 317
LOT 318
LOT 319
LOT 320
LOT 321
LOT 48
LOT 49
LOT 99
LOT 100
LOT 101
LOT 102

PARCEL AREA TABLE					
PARCEL	AREA	AREA	PARCEL	AREA	AREA
LOT 307	0.19 AC.	8,190.8 SQ.FT.	LOT 370	0.19 AC.	8,060.0 SQ.FT.
LOT 308	0.19 AC.	8,060.0 SQ.FT.	LOT 371	0.19 AC.	8,060.0 SQ.FT.
LOT 309	0.19 AC.	8,060.0 SQ.FT.	LOT 372	0.19 AC.	8,060.0 SQ.FT.
LOT 310	0.19 AC.	8,060.0 SQ.FT.	LOT 373	0.19 AC.	8,060.0 SQ.FT.
LOT 311	0.19 AC.	8,060.0 SQ.FT.	LOT 374	0.19 AC.	8,060.0 SQ.FT.
LOT 312	0.24 AC.	10,400.0 SQ.FT.	LOT 375	0.21 AC.	9,170.9 SQ.FT.
LOT 313	0.24 AC.	10,400.0 SQ.FT.	LOT 376	0.24 AC.	10,435.5 SQ.FT.
LOT 314	0.24 AC.	10,400.0 SQ.FT.	GLADE RUN R/W	2.88 AC.	125,626.3 SQ.FT.
LOT 315	0.24 AC.	10,400.0 SQ.FT.	IRONWOOD R/W	0.90 AC.	39,212.1 SQ.FT.
LOT 316	0.26 AC.	11,175.9 SQ.FT.	MUNTZ ROAD RW	0.81 AC.	35,446.9 SQ.FT.
LOT 336	0.24 AC.	10,400.0 SQ.FT.	PARCEL 301-A	0.12 AC.	5,324.2 SQ.FT.
LOT 337	0.26 AC.	11,175.9 SQ.FT.	PARCEL 301-B	0.08 AC.	3,629.3 SQ.FT.
LOT 338	0.26 AC.	11,175.9 SQ.FT.	PARCEL 301-C	0.08 AC.	3,623.9 SQ.FT.
LOT 339	0.24 AC.	10,400.0 SQ.FT.	PARCEL 301-D	0.08 AC.	3,618.5 SQ.FT.
LOT 340	0.24 AC.	10,400.0 SQ.FT.	PARCEL 301-E	0.13 AC.	5,640.4 SQ.FT.
LOT 341	0.24 AC.	10,400.0 SQ.FT.	PARCEL 302-A	0.14 AC.	6,011.5 SQ.FT.
LOT 342	0.24 AC.	10,400.0 SQ.FT.	PARCEL 302-B	0.08 AC.	3,456.2 SQ.FT.
LOT 343	0.25 AC.	10,935.9 SQ.FT.	PARCEL 302-C	0.08 AC.	3,434.1 SQ.FT.
LOT 344	0.25 AC.	11,047.3 SQ.FT.	PARCEL 302-D	0.08 AC.	3,453.8 SQ.FT.
LOT 345	0.25 AC.	10,835.5 SQ.FT.	PARCEL 302-E	0.13 AC.	5,832.8 SQ.FT.
LOT 346	0.26 AC.	11,491.6 SQ.FT.	PARCEL 303-A	0.11 AC.	4,693.9 SQ.FT.
LOT 347	0.29 AC.	12,647.3 SQ.FT.	PARCEL 303-B	0.07 AC.	3,233.4 SQ.FT.
LOT 348	0.27 AC.	11,823.0 SQ.FT.	PARCEL 303-C	0.07 AC.	3,249.7 SQ.FT.
LOT 349	0.27 AC.	11,856.3 SQ.FT.	PARCEL 303-D	0.07 AC.	3,236.8 SQ.FT.
LOT 350	0.25 AC.	11,031.9 SQ.FT.	PARCEL 303-E	0.12 AC.	5,133.6 SQ.FT.
LOT 351	0.24 AC.	10,400.0 SQ.FT.	PARCEL 304-A	0.11 AC.	4,818.3 SQ.FT.
LOT 352	0.25 AC.	10,794.6 SQ.FT.	PARCEL 304-B	0.07 AC.	3,120.0 SQ.FT.
LOT 353	0.26 AC.	11,194.8 SQ.FT.	PARCEL 304-C	0.07 AC.	3,120.0 SQ.FT.
LOT 354	0.30 AC.	13,193.3 SQ.FT.	PARCEL 304-D	0.07 AC.	3,120.0 SQ.FT.
LOT 355	0.30 AC.	12,879.0 SQ.FT.	PARCEL 304-E	0.11 AC.	4,810.0 SQ.FT.
LOT 356	0.28 AC.	12,290.1 SQ.FT.	PARCEL 305-A	0.11 AC.	4,840.5 SQ.FT.
LOT 357	0.27 AC.	11,660.9 SQ.FT.	PARCEL 305-B	0.07 AC.	3,181.8 SQ.FT.
LOT 358	0.27 AC.	11,616.2 SQ.FT.	PARCEL 305-C	0.07 AC.	3,192.5 SQ.FT.
LOT 359	0.22 AC.	9,680.0 SQ.FT.	PARCEL 305-D	0.11 AC.	4,680.2 SQ.FT.
LOT 360	0.19 AC.	8,060.0 SQ.FT.	PARCEL 306-A	0.11 AC.	4,693.1 SQ.FT.
LOT 361	0.19 AC.	8,060.0 SQ.FT.	PARCEL 306-B	0.07 AC.	3,230.9 SQ.FT.
LOT 362	0.19 AC.	8,060.0 SQ.FT.	PARCEL 306-C	0.07 AC.	3,245.5 SQ.FT.
LOT 363	0.19 AC.	8,060.0 SQ.FT.	PARCEL 306-D	0.07 AC.	3,230.9 SQ.FT.
LOT 364	0.19 AC.	8,060.0 SQ.FT.	PARCEL 306-E	0.11 AC.	4,693.1 SQ.FT.
LOT 365	0.19 AC.	8,060.0 SQ.FT.	PARCEL B5	13.23 AC.	576,441.5 SQ.FT.
LOT 366	0.19 AC.	8,060.0 SQ.FT.	PARCEL OS2-R	4.06 AC.	177,016.7 SQ.FT.
LOT 367	0.19 AC.	8,060.0 SQ.FT.	PARCEL OS4	4.45 AC.	194,047.1 SQ.FT.
LOT 368	0.19 AC.	8,060.0 SQ.FT.	PARCEL OS6	0.69 AC.	30,265.8 SQ.FT.
LOT 369	0.19 AC.	8,060.0 SQ.FT.			

PLAN BOOK	PAGE
434	39

811 Know what's **below.** **Call** before you dig.

POCS SER. #: 20191992518

THE LOCATIONS OF EXISTING UNDERGROUND UTILITIES ARE SHOWN IN AN APPROXIMATE WAY ONLY AND HAVE NOT BEEN INDEPENDENTLY VERIFIED BY THE OWNER OR ITS REPRESENTATIVE. THE CONTRACTOR SHALL DETERMINE THE EXACT LOCATION OF ALL EXISTING UTILITIES BEFORE COMMENCING WORK, AND AGREES TO BE FULLY RESPONSIBLE FOR ANY AND ALL DAMAGES WHICH MIGHT BE OCCASIONED BY THE CONTRACTOR'S FAILURE TO EXACTLY LOCATE AND PRESERVE ANY AND ALL UNDERGROUND UTILITIES.

NORTH

Horizontal Scale

50 0 50 100

(Feet)

1 inch = 50 ft.

Date:	Revision Description:	By:
03/14/2025	REVISED PHASE 3 & 4 SUBMISSION	AGM
04/14/2025	REVISED ROAD NAMES	AGM
10/15/2025	ADDED PRIVATE DRAINAGE EASEMENTS	AGM

Professional Seal

Prepared By:

Sheffler & Company, Inc.
ENGINEERING • SURVEYING

1712 Mount Nebo Road
Sewickley, PA 15143

Office Phone: 412-219-4509
Email: Info@ShefflerCo.com

Glade Run Village Residential Subdivision - Phase 3B

Prepared For:

Glade Run Properties

Situate In:

Zelienople Borough, Butler County, Pennsylvania

Being a Subdivision of Parcel OS2, as shown in the Glade Run Village Residential Subdivision - Phase 1, recorded in PBV 423, pgs. 45-46 & Parcel B4, as shown in the Glade Run Village Residential Subdivision - Phase 3A, recorded in PBV 428 Pgs. 44-45.

Glade Run Properties
Attn: James Holcomb
380 Southpointe Blvd., Suite 400
Canonsburg, Pa 15317
Phone: 724-229-8800

DRAWING SCALE:	1" = 50'	DESIGNED BY:	AGM
DATE ISSUED:	1/16/2025	REVIEWED BY:	MWS/GAS
PROJECT JOB#:	4072	FIELD BOOK #:	4072

CADD#: 4072 - GLADE RUN - REC3B - PH 3B SUBDIV

Sheet No.

REC 4

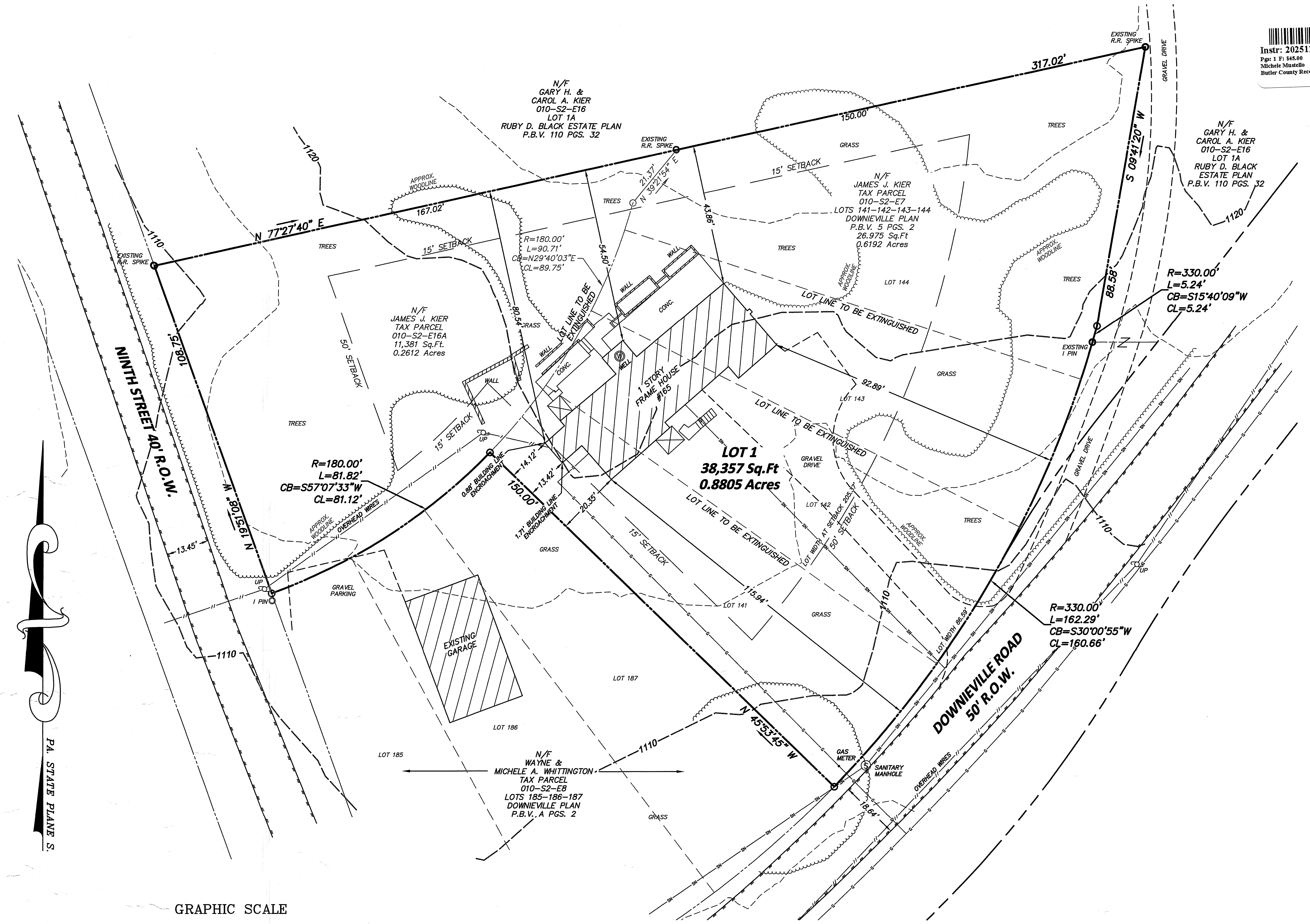
EXISTING R.R. SPIKE
317.02'
150.00'
167.02'
N 77°27'40" E
N/F
GARY H. &
CAROL A. KIER
010-S2-E16
LOT 1A
RUBY D. BLACK ESTATE PLAN
P.B.V. 110 PGS. 32
EXISTING R.R. SPIKE
21.37'
N 39°21'54" E
43.86'
54.50'
80.54'
15' SETBACK
APPROX. WOODLINE
TREES
GRASS
N/F
JAMES J. KIER
TAX PARCEL
010-S2-E7
LOTS 141-142-143-144
DOWNIEVILLE PLAN
P.B.V. 5 PGS. 2
26.975 Sq.Ft
0.6192 Acres
R=180.00'
L=90.71'
CB=N29°40'03"E
CL=89.75'
LOT LINE TO BE EXTINGUISHED
WALL
CONC.
WELL
1 STORY FRAME HOUSE #165
LOT 144
LOT 143
LOT 142
LOT 141
92.89'
115.94'
GRAVEL DRIVE
S 09°41'20" W
88.58'
R=330.00'
L=5.24'
CB=S15°40'09"W
CL=5.24'
EXISTING I PIN
N/F
GARY H. &
CAROL A. KIER
010-S2-E16
LOT 1A
RUBY D. BLACK
ESTATE PLAN
P.B.V. 110 PGS. 32
1120
1110
EXISTING R.R. SPIKE
NINTH STREET 40' R.O.W.
108.75'
N 19°51'08" W
13.45'
N/F
JAMES J. KIER
TAX PARCEL
010-S2-E16A
11,381 Sq.Ft.
0.2612 Acres
50' SETBACK
R=180.00'
L=81.82'
CB=S57°07'33"W
CL=81.12'
OVERHEAD WIRES
UP
I PIN
0.88' BUILDING LINE ENCROACHMENT
1.71' BUILDING LINE ENCROACHMENT
14.12'
13.42'
150.00'
20.35'
LOT 1
38,357 Sq.Ft
0.8805 Acres
LOT WIDTH AT SETBACK 205.37'
50' SETBACK
LOT WIDTH 86.59'
GRAVEL PARKING
EXISTING GARAGE
LOT 187
LOT 186
LOT 185
N 45°53'45" W
N/F
WAYNE &
MICHELE A. WHITTINGTON
TAX PARCEL
010-S2-E8
LOTS 185-186-187
DOWNIEVILLE PLAN
P.B.V. A PGS. 2
GAS METER
SANITARY MANHOLE
18.64'
DOWNIEVILLE ROAD 50' R.O.W.
R=330.00'
L=162.29'
CB=S30°00'55"W
CL=160.66'
PA. STATE PLANE S.

GRAPHIC SCALE

20 0 10 20 40 80

(IN FEET)
1 inch = 20 ft.

Instr: 202511190019368
Pgs: 1 F: $45.00 11/19/2025 1:37 PM
Michele Mustello T20250016226
Butler County Recorder PA

CALL BEFORE YOU DIG!

PENNSYLVANIA LAW REQUIRES
3 WORKING DAYS NOTICE FOR
CONSTRUCTION PHASE AND 10 WORKING
DAYS IN DESIGN STAGE - STOP CALL

PA 1 CALL SYSTEM INC.
1-800-242-1776

P.O.C.S. SERIAL NUMBER
20252094250

AREA CHART

TAX PARCEL 010-S2-E16A
11,381 Sq.Ft. 0.2612 Acres

TAX PARCEL 010-S2-E7
26.975 Sq.Ft 0.6192 Acres

==============================
TOTAL AREA 38,357 SQ.FT 0.8805 ACRES

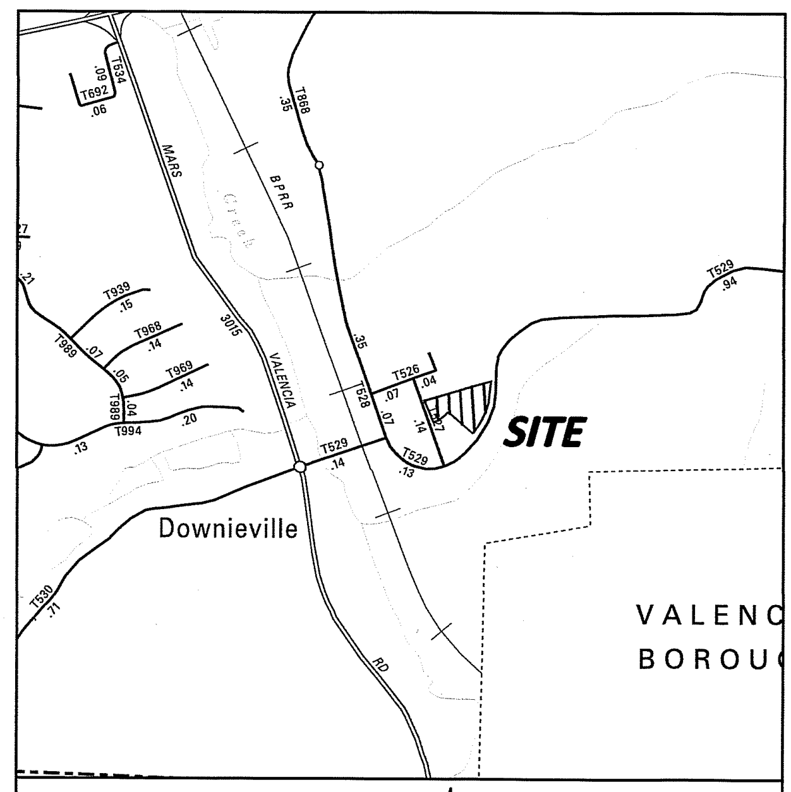
SITE
Downieville
VALENC
BOROU

LOCATION MAP SCALE - N.T.S.

OWNER'S CERTIFICATION

I, JAMES J. KIER THE UNDERSIGNED, HEREBY DECLARE THAT I AM THE OWNER OF THE PROPERTY SHOWN ON THIS FINAL PLAN, THAT THE FINAL PLAN AND THE PROPOSED SUBDIVISION OR LAND DEVELOPMENT WERE MADE WITH THE OWNER'S CONSENT, AND THAT THE OWNER DESIRES THE FINAL PLAN TO BE RECORDED AS SUCH.

IN WITNESS WHEREOF I HAVE SET (MY HAND AND SEAL(S) THIS 29 DAY OF September, 2025.

James J Kier
JAMES J. KIER

ACKNOWLEDGEMENT

COMMONWEALTH OF PENNSYLVANIA }
} SS:
COUNTY OF BUTLER }

BEFORE ME, THE SUBSCRIBER, A NOTARY PUBLIC IN AND FOR SAID COUNTY AND COMMONWEALTH, PERSONALLY APPEARED THE ABOVE NAMED JAMES J. KIER OWNER WHO ACKNOWLEDGED THE FOREGOING FINAL PLAN OF SUBDIVISION TO BE HIS, ACT AND DEED AND DESIRED THE SAME TO RECORDED AS SUCH.

WITNESS MY HAND AND NOTARIAL SEAL THIS 29 DAY September OF 2025.

(NOTARY PUBLIC)

MY COMMISSION EXPIRES THIS 15 DAY April OF 2026.

NOTARY

Commonwealth of Pennsylvania - Notary Seal
THOMAS SHEPPARD - Notary Public
Allegheny County
My Commission Expires April 15, 2026
Commission Number 1419552

NOTARY STAMP

PROFESSIONAL SURVEYOR

I, MARK B. SCHMIDT A PROFESSIONAL SURVEYOR OF THE COMMONWEALTH OF PENNSYLVANIA, DO HEREBY CERTIFY THAT THIS PLAN SHOWN HEREON IS TRUE AND CORRECT TO THE STANDARDS OF THE BUTLER COUNTY SUBDIVISION AND LAND DEVELOPMENT ORDINANCE AND THAT THE SURVEY AND ALL ANGLES, DISTANCES, AND COURSES ARE ACCURATELY SHOWN, THAT THE MONUMENTS AND MARKERS AS SHOWN ON THE PLAT HAVE BEEN, OR WILL BE SET, AND TO THE BEST OF MY KNOWLEDGE, THAT THIS PLAN CORRECTLY REPRESENTS THE LOTS, LANDS, STREETS, AND HIGHWAYS AS SURVEYED AND PLOTTED BY ME FOR THE OWNERS OR AGENTS.

MARK B. SCHMIDT SU-036950-E (REGISTRATION NO.) 9-29-2025 (DATE)

PROFESSIONAL ENGINEER

TOWNSHIP ENGINEERS APPROVAL

APPROVED BY THE TOWNSHIP ENGINEER OF ADAMS TOWNSHIP, THIS 6 DAY OF OCTOBER. A.D. 2025.
RICHARD W. CRAFT

SIGNATURE PE063068 REGISTRATION NO.

TOWNSHIP PLANNING APPROVAL

THIS PLAT OF LAND DEVELOPMENT HAS BEEN APPROVED BY THE PLANNING COMMISSION OF THE TOWNSHIP OF ADAMS, BUTLER COUNTY, PENNSYLVANIA, THIS 3rd DAY OF September, 2025.

SECRETARY PRESIDENT

APPROVAL BY TOWNSHIP OF ADAMS

THE TOWNSHIP BOARD OF SUPERVISORS OF THE TOWNSHIP OF ADAMS, BUTLER COUNTY, PENNSYLVANIA, HEREBY GIVES PUBLIC NOTICE THAT IT IS APPROVING THIS PLAN OF LAND DEVELOPMENT FOR RECORDING PURPOSES ONLY. THE APPROVAL OF THIS SUBDIVISION PLAT BY THE TOWNSHIP OF ADAMS DOES NOT CONSTITUTE AN ACCEPTANCE OF THE ROADS, STREETS, ALLEYS, STORMWATER AND SANITARY SEWAGE DRAINAGE FACILITIES, EASEMENTS OR RIGHTS-OF-WAY, WATER MAINS OR ANY OTHER SERVICES OR IMPROVEMENTS SHOWN ON THIS PLAN NOR AN ASSUMPTION OF MAINTENANCE RESPONSIBILITY, NOR WILL THE SAME BE ACCEPTED OR MAINTAINED UNTIL CONSTRUCTED IN ACCORDANCE WITH ALL TOWNSHIP SPECIFICATIONS AND REQUIREMENTS AND OFFICIALLY ACCEPTED BY ACTION OF THE TOWNSHIP BOARD OF SUPERVISORS.

THIS PLAT OF SUBDIVISION APPROVED BY RESOLUTION OF THE TOWNSHIP BOARD OF SUPERVISORS OF THE TOWNSHIP OF ADAMS, BUTLER COUNTY. PENNSYLVANIA ON THIS 22nd DAY OF September, A.D. 2025.

ATTEST:

(SECRETARY OF BOARD OF SUPERVISORS) (CHAIRMAN OF BOARD OF SUPERVISORS)

Daryl Bur

ADAMS TOWNSHIP OF SUPERVISORS SEAL

BUTLER COUNTY PLANNING COMMISSION APPROVAL

REVIEWED BY THE BUTLER COUNTY PLANNING COMMISSION THIS 8TH DAY August OF 2025.

SECRETARY CHAIRMAN

SEE COMMENTS ON FILE AT THE BUTLER COUNTY PLANNING COMMISSION

PLAN NUMBER: 25167

PROOF OF RECORDING

COMMONWEALTH OF PENNSYLVANIA }
} SS
COUNTY OF BUTLER }

RECORDED IN THE OFFICE FOR THE RECORDING OF DEEDS, PLATS AND PLANS IN SAID COUNTY, IN PLAN BOOK 434 VOLUME PAGE(S) 40 GIVEN) UNDER MY HAND AND SEAL THIS 19TH DAY OF November, 2025

Michele M Mustello
RECORDER OF DEEDS

MICHELE M. MUSTELLO
RECORDER OF DEEDS
My Commission Expires First Monday in January 2028

ZONING = R-2 RESIDENTIAL DISTRICT	
MINIMUM LOT AREA (SQUARE FEET) OR DETERMINED FOR ON-LOT SEPTIC DISPOSAL	43,560
MINIMUM LOT WIDTH (FEET) AT FRONT SETBACK LINE	125 FEET
MINIMUM FRONT YARD DEPTH (FEET)	50 FEET
MINIMUM SIDE YARD DEPTH (FEET) TWO REQUIRED	15 FEET
MINIMUM REAR DEPTH (FEET)	25 FEET
YARD DEPTH ADJACENT TO A PUBLIC ROAD	50 FEET.

NOTES

1. THIS PLAN IS A CONSOLIDATION OF TAX PARCELS TAX PARCELS 010-S2-E16A AND 010-S2-E7.
2. ALL DEEDS OR PLAN BEARINGS AND COORDINATES HAVE BEEN ROTATED AND CONVERTED TO PA STATE PLANE COORDINATE SYSTEM SOUTH ZONE, NORTH AMERICAN DATUM OF 1983 (2011) EPOCH 2010.00.
3. THIS IS A NON-CONFORMING LOT , BEING LESS THAN 1 ACRE AS REQUIRED BY ADAMS TOWNSHIP ZONING REGULATION IN ADAMS TOWNSHIP ORDINANCE (CHAPTER 192-19F.1 (a).)(167-10k(2))).
4. THE EXISTING SINGLE-FAMILY HOUSE IS CONSTRUCTED WITHIN THE MINIMUM SIDE YARD AND IS AN EXISTING NON-CONFORMING STRUCTURE DUE TO SIDE YARD INFRINGEMENT.
5. A FLOOD ZONE IS NOT PRESENT ON THE PROPERTY

MARK B. SCHMIDT					
SURVEYOR	TOWNSHIP ENGINEER	ADAMS BOARD	ADAMS PLANNING	BUTLER PLANNING	RECORDER OF DEEDS

PLAN BOOK	PAGE
434	40

Z:\PROJECTS\14400 Jobs\14432\02_Survey\01_DWG\14432 CON.dwg, CONSOL, 9/29/2025 8:45 AM, Jerry Nist

X

HAMPTON TECHNICAL ASSOCIATES
ENGINEERING LAND SURVEYORS
ESTABLISHED 1960
www.hampton-technical.com

☒ Corporate Office
Etna Technical Center
35 Wilson Street, Suite 201
Pittsburgh, PA 15223
PHONE: (412) 781-9660
FAX: (412) 781-5904

☐ Mars Office
123 Ridge Road, Suite B
Valencia, PA 16059
PHONE: (724) 625-4544
FAX: (724) 625-4549

DATE ISSUED: 07-01-2025
PROJECT STATUS: -

REVISIONS:

NO.	DESCRIPTION	DATE
1	REVISIONS PER COMMENT LETTER	08-12-2025
2	REVISIONS PER COMMENT LETTER	08-19-2025
-	-	-
-	-	-
-	-	-
-	-	-

DRAWING ORIENTATION

PROJECT TITLE:
JAMES J. KIER PLAN OF LOTS CONSOLIDATION PLAN
TAX PARCELS 010-S2-E16A & 010-S2-E7

PROJECT LOCATION:
ADAMS TOWNSHIP
BUTLER COUNTY, PA

CLIENT NAME & ADDRESS:
JAMES J. KIER
165 DOWNIEVILLE RD. VALECIA, PA 16059

DRAWN BY: J.N.	CHECKED BY: M.S.
CAD FILE: 14432 CON.dwg	
HORZ. SCALE: 1"=20'	VERT. SCALE: -
SHEET: CONSOL	- OF -
PROJECT #: 14432	

Instr: 202511190019380
Pgs: 1 F: $45.00 11/19/2025 3:22 PM
Michele Mustello T20250016237
Butler County Recorder PA

OWNER'S CERTIFICATION

I, DAVID G. KENNEDY, THE UNDERSIGNED, HEREBY DECLARE THAT I AM THE OWNER OF THE PROPERTY SHOWN ON THIS FINAL PLAN, THAT THE FINAL PLAN AND THE PROPOSED SUBDIVISION OR LAND DEVELOPMENT WERE MADE WITH THE OWNER'S CONSENT, AND THAT THE OWNER DESIRES THE FINAL PLAN TO BE RECORDED AS SUCH.

IN WITNESS WHEREOF, I HAVE SET MY HAND AND SEAL THIS 19 DAY OF NOVEMBER, 2025.

x David G. Kennedy
DAVID G. KENNEDY

ACKNOWLEDGMENT OF NOTARY PUBLIC

COMMONWEALTH OF PENNSYLVANIA }
} SS:
COUNTY OF BUTLER }

BEFORE ME, THE SUBSCRIBER, A NOTARY PUBLIC IN AND FOR SAID COUNTY AND COMMONWEALTH, PERSONALLY APPEARED THE ABOVE NAMED, DAVID G. KENNEDY, AND ACKNOWLEDGED THE FOREGOING FINAL PLAN OF SUBDIVISION OR LAND DEVELOPMENT TO BE HIS ACT AND DEED AND DESIRED THE SAME TO BE RECORDED AS SUCH.

WITNESS MY HAND AND NOTARIAL SEAL THIS 19 DAY OF NOVEMBER, 2025.

MY COMMISSION EXPIRES THE 17 DAY OF FEBRUARY, 2027

Commonwealth of Pennsylvania - Notary Seal
Debra L. DeLancey, Notary Public
Butler County
My commission expires February 17, 2027
Commission number 1152784
Member, Pennsylvania Association of Notaries

x Debra L. DeLancey
NOTARY PUBLIC

SURVEYOR'S CERTIFICATION

I, STANLEY D. GRAFF, A REGISTERED SURVEYOR OF THE COMMONWEALTH OF PENNSYLVANIA, DO HEREBY CERTIFY, TO THE BEST OF MY KNOWLEDGE, THAT THIS PLAN AS SHOWN HEREON IS BASED UPON ACTUAL FIELD SURVEY OF THE LAND DESCRIBED AND THAT ALL ANGLES, DISTANCES AND COURSES ARE CORRECTLY SHOWN, THAT THE MONUMENTS AND MARKERS HAVE BEEN SET AS SHOWN ON THE PLAN, AND THAT THIS PLAN CORRECTLY REPRESENTS THE LOTS, LANDS, STREETS AND HIGHWAYS AS SURVEYED AND PLOTTED BY ME, OR UNDER MY DIRECTION, FOR THE OWNERS OR AGENTS.

SEPT. 19, 2025
DATE

x
STANLEY D. GRAFF
REG. NO. SU-030161-E

STANLEY D. GRAFF
NO. 30161-E

MUNICIPAL DECLARATIONS

THE BOARD OF SUPERVISORS OF THE TOWNSHIP OF WINFIELD, HEREBY GIVES PUBLIC NOTICE THAT IN APPROVING THIS PLAN FOR RECORDING PURPOSES ONLY, THE TOWNSHIP OF WINFIELD ASSUMES NO OBLIGATIONS, LEGAL OR OTHERWISE, EXPRESSED OR IMPLIED EITHER TO ACCEPT SAID STREETS AS TOWNSHIP STREETS OR ROADS OR GRADE, PAVE AND CURB THE STREETS IN SAID PLAN, OR TO CONSTRUCT SEWERS THEREIN OR TO INSTALL ANY OTHER SUCH SERVICE ORDINARILY INSTALLED IN TOWNSHIP STREETS OR ROADS.

MUNICIPAL REVIEW AND APPROVAL STATEMENTS

APPROVED BY THE BOARD OF SUPERVISORS OF THE TOWNSHIP OF WINFIELD THIS 17th DAY OF November, 2025.

x Patricia Knapp
SECRETARY

x
CHAIRPERSON
BOARD OF SUPERVISORS

REVIEWED BY THE PLANNING COMMISSION OF THE TOWNSHIP OF WINFIELD THIS 5th DAY OF November, 2025.

x Patricia Knapp
SECRETARY

x Pamela S. Stum
Vice CHAIRPERSON
PLANNING COMMISSION

BUTLER COUNTY PLANNING COMMISSION REVIEW STATEMENT

REVIEWED BY THE BUTLER COUNTY PLANNING COMMISSION ON THIS 15th DAY OF October, 2025.

x R. Henshaw MKG
SECRETARY
Plan #25221

x J. Hines MKG
CHAIRPERSON
BUTLER COUNTY PLANNING COMMISSION

PROOF OF RECORDING

RECORDED IN THE OFFICE OF THE RECORDER OF DEEDS OF THE COUNTY OF BUTLER, COMMONWEALTH OF PENNSYLVANIA, IN

PLAN BOOK VOLUME 434, PAGE(S) 41.

GIVEN UNDER MY HAND AND SEAL THIS 19TH DAY OF NOVEMBER, 2025.

x Michele M. Mustello
RECORDER OF DEEDS

MICHELE M. MUSTELLO
RECORDER OF DEEDS
My Commission Expires First Monday in January 2028

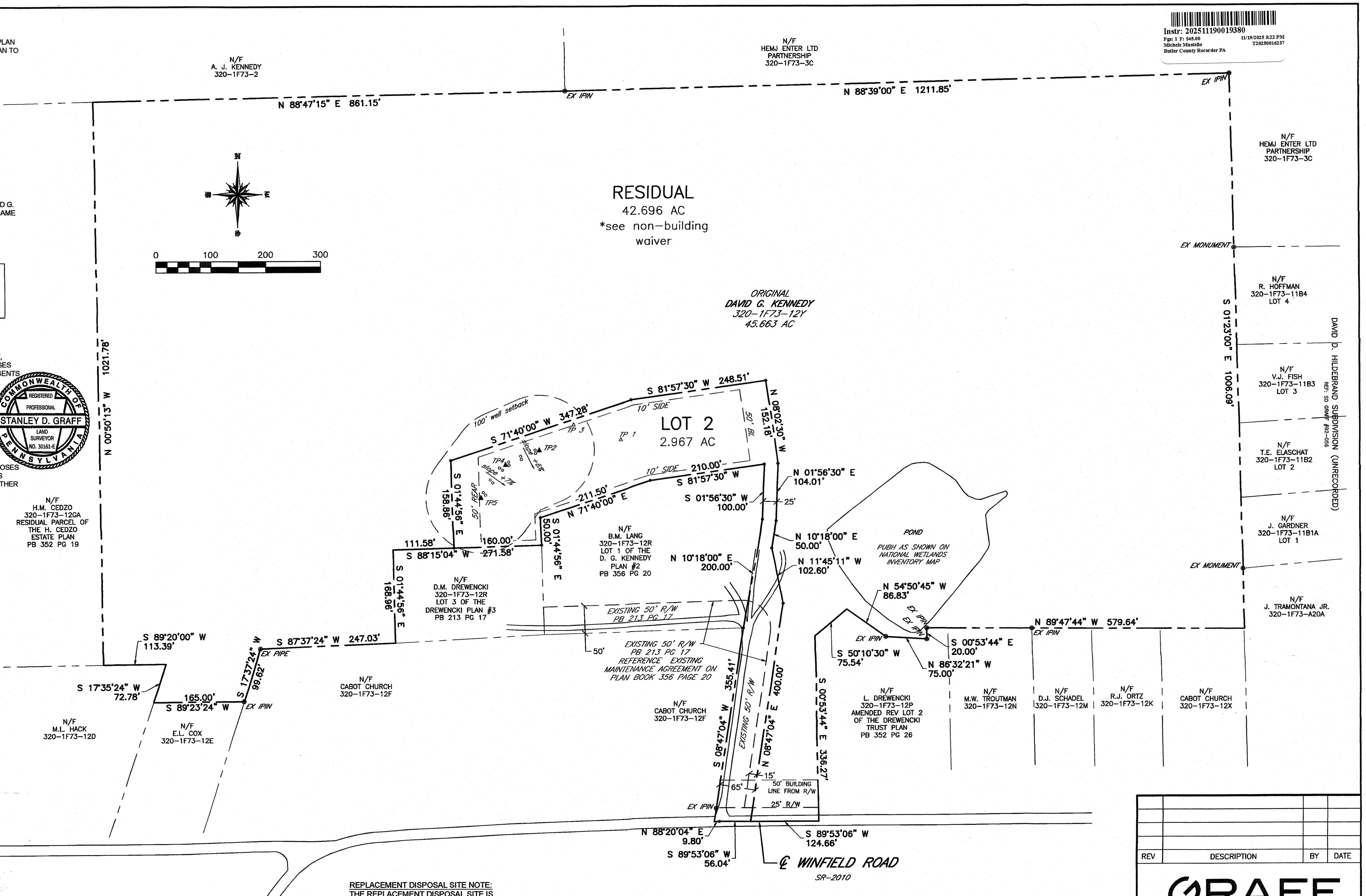
N/F
A. J. KENNEDY
320-1F73-2
N/F
HEMJ ENTER LTD
PARTNERSHIP
320-1F73-3C
N 88°47'15" E 861.15'
EX IPIN
N 88°39'00" E 1211.85'
EX IPIN
N
0 100 200 300
RESIDUAL
42.696 AC
*see non-building waiver
ORIGINAL
DAVID G. KENNEDY
320-1F73-12Y
45.663 AC
N 00°50'13" W 1021.78'
S 01°23'00" E 1006.09'
EX MONUMENT
N/F
R. HOFFMAN
320-1F73-11B4
LOT 4
N/F
V.J. FISH
320-1F73-11B3
LOT 3
N/F
T.E. ELASCHAT
320-1F73-11B2
LOT 2
N/F
J. GARDNER
320-1F73-11B1A
LOT 1
DAVID D. HILDEBRAND SUBDIVISION (UNRECORDED)
REF: SD GRAFF #92-056
EX MONUMENT
N/F
J. TRAMONTANA JR.
320-1F73-A20A
LOT 2
2.967 AC
S 81°57'30" W 248.51'
10' SIDE
50' BL
N 08°02'30" W 152.18'
S 71°40'00" W 347.28'
100' well setback
TP 1
TP 2
TP 3
TP4
TP5
slope +6%
slope +7%
50' REAR
S 01°44'56" E 158.86'
10' SIDE 210.00'
S 81°57'30" W
211.50'
N 71°40'00" E
S 01°44'56" E 50.00'
111.58'
160.00'
S 88°15'04" W 271.58'
N 01°56'30" E 104.01'
S 01°56'30" W 100.00'
25'
N 10°18'00" E 50.00'
N 10°18'00" E 200.00'
N 11°45'11" W 102.60'
N/F
H.M. CEDZO
320-1F73-12GA
RESIDUAL PARCEL OF
THE H. CEDZO
ESTATE PLAN
PB 352 PG 19
N/F
B.M. LANG
320-1F73-12R
LOT 1 OF THE
D. G. KENNEDY
PLAN #2
PB 356 PG 20
S 01°44'56" E 168.96'
N/F
D.M. DREWENCKI
320-1F73-12R
LOT 3 OF THE
DREWENCKI PLAN #3
PB 213 PG 17
EXISTING 50' R/W
PB 213 PG 17
EXISTING 50' R/W
PB 213 PG 17
REFERENCE EXISTING
MAINTENANCE AGREEMENT ON
PLAN BOOK 356 PAGE 20
50'
POND
PUBH AS SHOWN ON
NATIONAL WETLANDS
INVENTORY MAP
N 54°50'45" W 86.83'
EX IPIN
EX IPIN
EX IPIN
S 00°53'44" E 20.00'
N 86°32'21" W 75.00'
S 50°10'30" W 75.54'
N 89°47'44" W 579.64'
EX IPIN
S 89°20'00" W 113.39'
S 87°37'24" W 247.03'
EX PIPE
S 17°37'24" W 99.62'
S 17°35'24" W 72.78'
165.00'
S 89°23'24" W
EX IPIN
N/F
CABOT CHURCH
320-1F73-12F
N/F
M.L. HACK
320-1F73-12D
N/F
E.L. COX
320-1F73-12E
N/F
CABOT CHURCH
320-1F73-12F
S 08°47'04" W 355.41'
EXISTING 50' R/W
N 08°47'04" E 400.00'
S 00°53'44" E 336.27'
N/F
L. DREWENCKI
320-1F73-12P
AMENDED REV LOT 2
OF THE DREWENCKI
TRUST PLAN
PB 352 PG 26
N/F
M.W. TROUTMAN
320-1F73-12N
N/F
D.J. SCHADEL
320-1F73-12M
N/F
R.J. ORTZ
320-1F73-12K
N/F
CABOT CHURCH
320-1F73-12X
15'
65'
50' BUILDING
LINE FROM R/W
25' R/W
EX IPIN
N 88°20'04" E 9.80'
S 89°53'06" W 56.04'
S 89°53'06" W 124.66'
℄ WINFIELD ROAD
SR-2010

REPLACEMENT DISPOSAL SITE NOTE:

THE REPLACEMENT DISPOSAL SITE IS RESERVED FOR A REPLACEMENT ABSORPTION AREA IN THE EVENT THE PRIMARY SYSTEM FAILS. THIS AREA MUST NOT BE DISTURBED.

PROPOSED WATER WELL SITE NOTE:

THE LOCATION OF ANY WATER WELL WILL MEET THE REQUIRED SEPTIC ISOLATION DISTANCES, BEING ATLEAST 100 FEET FROM THE SEWAGE ABSORPTION AREAS.

PROPERTY AREA SUMMARY:

EXISTING TOTAL 320-1F73-12Y	45.663 AC
REVISED TOTAL	
RESIDUAL	42.696 AC
+LOT 2	2.967 AC
REVISED TOTAL	45.663 AC

GENERAL NOTES:

1.	PROPERTY OWNER:	DAVID G. KENNEDY
2.	MAILING ADDRESS:	936 BEAR CREEK RD, CABOT PA 16023
3.	ZONING DISTRICT:	C COMMERCIAL AND RA RESIDENTIAL AGRICULTURAL
4.	FEMA FLOOD ZONE:	ZONE X - AREA OF MINIMAL FLOOD HAZARD FIRM: 42019C0445D FIRM EFFECTIVE: 8/2/2018

5. REFERENCES
  - 5.1. CURRENT DEEDS OF RECORD
  - 5.2. PREVIOUSLY RECORDED PLANS
    - 5.2.1. D. G. KENNEDY PLAN NO. 2 PLAN BOOK 356 PG 20
    - 5.2.2. DREWENCKI TRUST PLAN PLAN BOOK 352 PG 26
    - 5.2.3. H. CEDZO ESTATE PLAN BOOK 352 PG 19
    - 5.2.4. D.G. KENNEDY FARM PLAN PLAN BOOK 335 PG 50
    - 5.2.5. DREWENCKI PLAN #3 PLAN BOOK 213 PG 17
    - 5.2.6. DREWENCKI PLAN OF SUBDIVISION PLAN BOOK 187 PG 12
    - 5.2.7. 2003 SD GRAFF SURVEY FOR CABOT UNITED METHODIST CHURCH
    - 5.2.8. DAVID D. HILDEBRAND SUBDIVISION UNRECORDED / REF: SD GRAFF#92-056

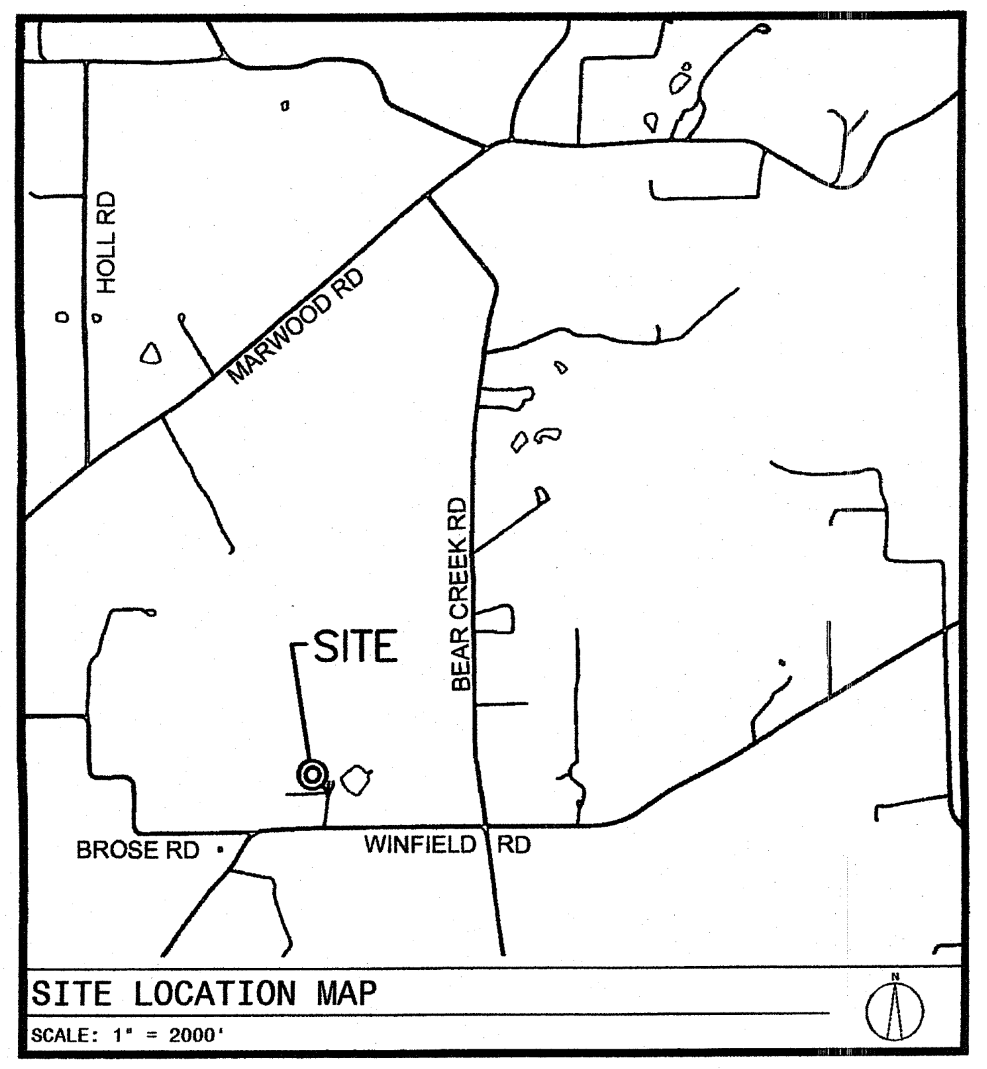
HOLL RD
MARWOOD RD
BEAR CREEK RD
SITE
BROSE RD
WINFIELD RD
N

SITE LOCATION MAP
SCALE: 1" = 2000'

NON-BUILDING WAIVER / RESIDUAL TRACT
RESIDUAL TRACT WAIVER

"AS OF THE DATE OF THIS PLOT PLAN RECORDING, THE RESIDUAL TRACT OF THIS SUBDIVISION IS DEDICATED FOR THE EXPRESS PURPOSE OF AGRICULTURAL USE. NO PORTION OF THE RESIDUAL TRACT THIS SUBDIVISION HAS BEEN APPROVED BY THE MUNICIPALITY OR THE DEPARTMENT OF ENVIRONMENTAL OF PROTECTION FOR THE INSTALLATION OF SEWAGE DISPOSAL FACILITIES. NO SEWAGE PERMIT WILL BE ISSUED FOR THE INSTALLATION, CONSTRUCTION, CONNECTION TO OR USE OF ANY SEWAGE COLLECTION, CONVEYANCE, TREATMENT OR DISPOSAL SYSTEM (EXCEPT FOR REPAIRS TO EXISTING SYSTEMS) UNLESS THE MUNICIPALITY AND DEP HAVE APPROVED SEWAGE FACILITIES PLANNING MODULES FOR THE RESIDUAL TRACT OF THE SUBDIVISION DESCRIBED HEREIN IN ACCORDANCE WITH THE SEWAGE FACILITIES ACT (35 P.S. SECTIONS 750.1 ET. SEQ.) AND REGULATIONS PROMULGATED THEREUNDER. PRIOR TO SIGNING, EXECUTING, IMPLEMENTING OR RECORDING ANY SALES CONTRACT OR SUBDIVISION PLAN, ANY PURCHASER OR SUBDIVIDER OF ANY PORTION OF THIS RESIDUAL TRACT SHOULD CONTACT THE MUNICIPALITY WHICH IS CHARGED WITH ADMINISTERING THE SEWAGE FACILITIES ACT TO DETERMINE WHAT SEWAGE FACILITIES PLANNING IS REQUIRED AND THE PROCEDURE AND REQUIREMENTS FOR OBTAINING APPROPRIATE PERMITS OR APPROVALS."

PLAN ORIENTATION NOTE: THE BEARINGS SHOWN HEREON ARE BASED ON THE PENNSYLVANIA STATE PLANE COORDINATE SYSTEM (PA-S) / NAD 1983

NOTE: SUBJECT TO AND TOGETHER WITH ANY AND ALL EXISTING RIGHTS-OF-WAY, EASEMENTS AND CONDITIONAL CLAUSES OF RECORD OR ESTABLISHED BY DUE PROCESS.

RECORDED	20
PLAN BOOK	PAGE
434	41
SHEET 1 of 1	

REV	DESCRIPTION	BY	DATE

GRAFF SURVEYING

GRAFF SURVEYING LLC
PO BOX 521 | SAXONBURG, PA 16056
P: 724-352-3811 F: 724-352-1059
INFO@GRAFFSURVEYING.COM
WWW.GRAFFSURVEYING.COM

PROJECT DESCRIPTION

D. G. KENNEDY PLAN No. 3

BEING A

SUBDIVISION

FOR

DAVID G. KENNEDY

SITUATE
WINFIELD TOWNSHIP
BUTLER COUNTY, PENNSYLVANIA

DATE	DRAWN	CHECKED	SCALE
06/13/2025	SDG	Sdg	1" = 100'

PROJECT NO.	TAX PARCEL NO.	REVISION
25-080	320-1F73-12Y	-

OWNER'S CERTIFICATION

WE, ROY J. SCHIEBEL, GERALDINE E. SCHIEBEL AND CAROL J. GREGORY, THE UNDERSIGNED, HEREBY DECLARE THAT WE ARE THE OWNERS OF THE PROPERTY SHOWN ON THIS FINAL PLAN, THAT THE FINAL PLAN AND THE PROPOSED SUBDIVISION OR LAND DEVELOPMENT WERE MADE WITH THE OWNERS' CONSENT, AND THAT THE OWNERS DESIRE THE FINAL PLAN TO BE RECORDED AS SUCH.

IN WITNESS WHEREOF, WE HAVE SET OUR HAND AND SEAL THIS 18 DAY OF November, 2025.

x ROY J. SCHIEBEL

x GERALDINE E. SCHIEBEL

x Carol J Gregory
CAROL J. GREGORY

ACKNOWLEDGMENT OF NOTARY PUBLIC

COMMONWEALTH OF PENNSYLVANIA }
} SS:
COUNTY OF BUTLER }

BEFORE ME, THE SUBSCRIBER, A NOTARY PUBLIC IN AND FOR SAID COUNTY AND COMMONWEALTH, PERSONALLY APPEARED THE ABOVE NAMED, ROY J. SCHIEBEL, GERALDINE E. SCHIEBEL AND CAROL J. GREGORY, AND ACKNOWLEDGED THE FOREGOING FINAL PLAN OF SUBDIVISION OR LAND DEVELOPMENT TO BE THEIR ACT AND DEED AND DESIRED THE SAME TO BE RECORDED AS SUCH.

WITNESS MY HAND AND NOTARIAL SEAL THIS 18 DAY OF November, 2025.

MY COMMISSION EXPIRES THE 17 DAY OF FEBRUARY, 2027

x Debra L DeLancey
NOTARY PUBLIC

Commonwealth of Pennsylvania - Notary Seal
Debra L. DeLancey, Notary Public
Butler County
My commission expires February 17, 2027
Commission number 1152784
Member, Pennsylvania Association of Notaries

SURVEYOR'S CERTIFICATION

I, STANLEY D. GRAFF, A REGISTERED SURVEYOR OF THE COMMONWEALTH OF PENNSYLVANIA, DO HEREBY CERTIFY, TO THE BEST OF MY KNOWLEDGE, THAT THIS PLAN AS SHOWN HEREON IS BASED UPON ACTUAL FIELD SURVEY OF THE LAND DESCRIBED AND THAT ALL ANGLES, DISTANCES AND COURSES ARE CORRECTLY SHOWN, THAT THE MONUMENTS AND MARKERS HAVE BEEN SET AS SHOWN ON THE PLAN, AND THAT THIS PLAN CORRECTLY REPRESENTS THE LOTS, LANDS, STREETS AND HIGHWAYS AS SURVEYED AND PLOTTED BY ME, OR UNDER MY DIRECTION, FOR THE OWNERS OR AGENTS.

10 Nov. '25
DATE

x STANLEY D. GRAFF
REG. NO. SU-030161-E

STANLEY D. GRAFF
NO. 30161-E

MUNICIPAL REVIEW AND APPROVAL STATEMENTS

APPROVED BY THE BOARD OF SUPERVISORS OF THE TOWNSHIP OF CLEARFIELD THIS 10 DAY OF Nov., 2025.

x SECRETARY

x CHAIRPERSON
BOARD OF SUPERVISORS

REVIEWED BY THE PLANNING COMMISSION OF THE TOWNSHIP OF CLEARFIELD THIS 10th DAY OF Nov., 2025.

x SECRETARY

x CHAIRPERSON
PLANNING COMMISSION

BUTLER COUNTY PLANNING COMMISSION REVIEW STATEMENT

REVIEWED BY THE BUTLER COUNTY PLANNING COMMISSION ON THIS 13 DAY OF NOVEMBER, 2025.

x SECRETARY

x CHAIRPERSON
BUTLER COUNTY PLANNING COMMISSION

PLAN 25250

PROOF OF RECORDING

RECORDED IN THE OFFICE OF THE RECORDER OF DEEDS OF THE COUNTY OF BUTLER, COMMONWEALTH OF PENNSYLVANIA, IN PLAN BOOK VOLUME 434, PAGE(S) 42.

GIVEN UNDER MY HAND AND SEAL THIS 19TH DAY OF NOVEMBER, 2025.

x Michele M Mustello
RECORDER OF DEEDS

MICHELE M. MUSTELLO
RECORDER OF DEEDS

My Commission Expires First Monday in January 2028

Instr: 202511190019381
Pgs: 1 F: $45.00
11/19/2025 3:22 PM
T20250016237
Michele Mustello
Butler County Recorder PA

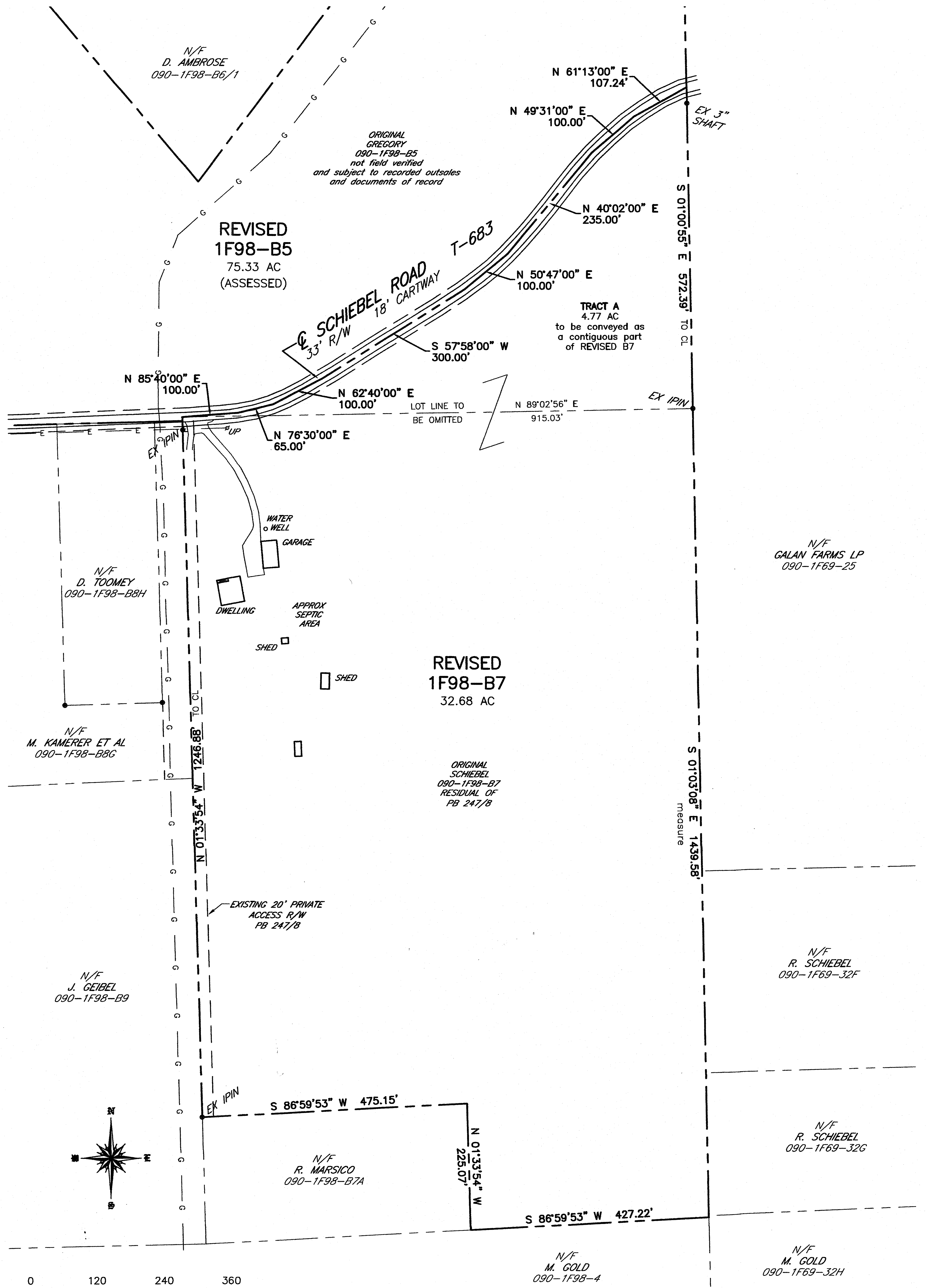
N/F
D. AMBROSE
090–1F98–B6/1
ORIGINAL
GREGORY
090–1F98–B5
not field verified
and subject to recorded outsales
and documents of record
REVISED
1F98–B5
75.33 AC
(ASSESSED)
N 61°13'00" E
107.24'
N 49°31'00" E
100.00'
EX 3" SHAFT
N 40°02'00" E
235.00'
S 01°00'55" E 572.39' TO CL
N 50°47'00" E
100.00'
℄ SCHIEBEL ROAD T-683
33' R/W 18' CARTWAY
TRACT A
4.77 AC
to be conveyed as
a contiguous part
of REVISED B7
S 57°58'00" W
300.00'
N 85°40'00" E
100.00'
N 62°40'00" E
100.00'
LOT LINE TO
BE OMITTED
N 89°02'56" E
915.03'
EX IPIN
N 76°30'00" E
65.00'
EX IPIN
UP
WATER
WELL
GARAGE
N/F
D. TOOMEY
090–1F98–B8H
DWELLING
APPROX
SEPTIC
AREA
SHED
SHED
REVISED
1F98–B7
32.68 AC
N/F
GALAN FARMS LP
090–1F69–25
N/F
M. KAMERER ET AL
090–1F98–B8G
N 01°33'54" W 1246.88' TO CL
ORIGINAL
SCHIEBEL
090–1F98–B7
RESIDUAL OF
PB 247/8
S 01°03'08" E 1439.58'
measure
EXISTING 20' PRIVATE
ACCESS R/W
PB 247/8
N/F
J. GEIBEL
090–1F98–B9
N/F
R. SCHIEBEL
090–1F69–32F
EX IPIN
S 86°59'53" W 475.15'
N 01°33'54" W
225.07'
N/F
R. SCHIEBEL
090–1F69–32G
N/F
R. MARSICO
090–1F98–B7A
S 86°59'53" W 427.22'
N/F
M. GOLD
090–1F98–4
N/F
M. GOLD
090–1F69–32H
N
E
S
0
120
240
360

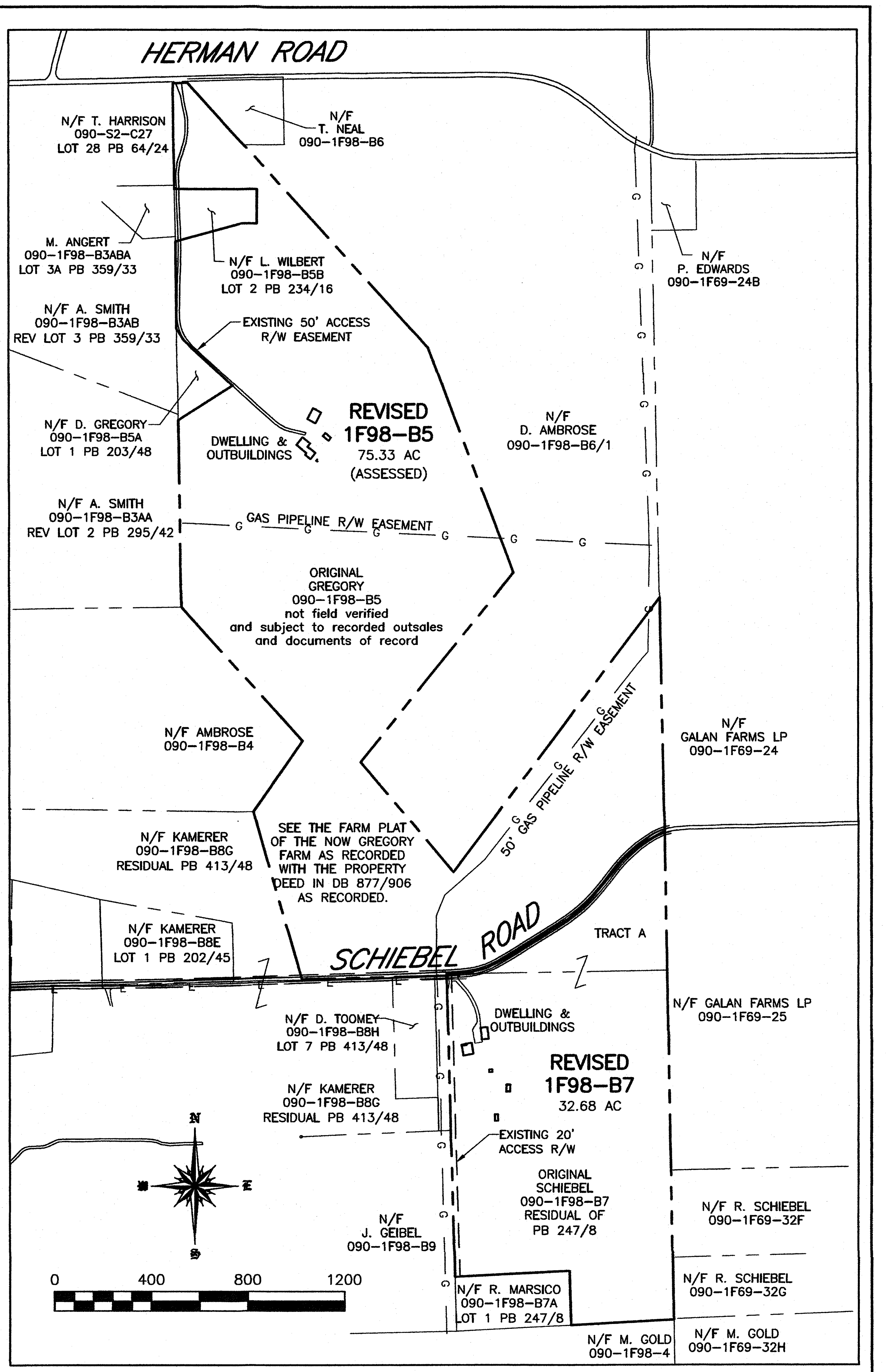
HERMAN ROAD
N/F T. HARRISON
090–S2–C27
LOT 28 PB 64/24
N/F
T. NEAL
090–1F98–B6
M. ANGERT
090–1F98–B3ABA
LOT 3A PB 359/33
N/F L. WILBERT
090–1F98–B5B
LOT 2 PB 234/16
N/F
P. EDWARDS
090–1F69–24B
N/F A. SMITH
090–1F98–B3AB
REV LOT 3 PB 359/33
EXISTING 50' ACCESS
R/W EASEMENT
N/F D. GREGORY
090–1F98–B5A
LOT 1 PB 203/48
DWELLING &
OUTBUILDINGS
REVISED
1F98–B5
75.33 AC
(ASSESSED)
N/F
D. AMBROSE
090–1F98–B6/1
N/F A. SMITH
090–1F98–B3AA
REV LOT 2 PB 295/42
GAS PIPELINE R/W EASEMENT
ORIGINAL
GREGORY
090–1F98–B5
not field verified
and subject to recorded outsales
and documents of record
N/F AMBROSE
090–1F98–B4
50' GAS PIPELINE R/W EASEMENT
N/F
GALAN FARMS LP
090–1F69–24
N/F KAMERER
090–1F98–B8G
RESIDUAL PB 413/48
SEE THE FARM PLAT
OF THE NOW GREGORY
FARM AS RECORDED
WITH THE PROPERTY
DEED IN DB 877/906
AS RECORDED.
N/F KAMERER
090–1F98–B8E
LOT 1 PB 202/45
SCHIEBEL ROAD
TRACT A
N/F D. TOOMEY
090–1F98–B8H
LOT 7 PB 413/48
DWELLING &
OUTBUILDINGS
N/F GALAN FARMS LP
090–1F69–25
REVISED
1F98–B7
32.68 AC
N/F KAMERER
090–1F98–B8G
RESIDUAL PB 413/48
EXISTING 20'
ACCESS R/W
ORIGINAL
SCHIEBEL
090–1F98–B7
RESIDUAL OF
PB 247/8
N/F
J. GEIBEL
090–1F98–B9
N/F R. SCHIEBEL
090–1F69–32F
N/F R. MARSICO
090–1F98–B7A
LOT 1 PB 247/8
N/F R. SCHIEBEL
090–1F69–32G
N/F M. GOLD
090–1F98–4
N/F M. GOLD
090–1F69–32H
N
E
S
0
400
800
1200

GENERAL NOTES:

1. TAX ID: 090-1F98-B7 (SCHIEBEL)
090-1F98-B5 (GREGORY)
2. OWNERS: ROY AND GERALDINE SCHIEBEL
298 SCHIEBEL RD, BUTLER PA

CAROL GREGORY
122 GREGORY LANE, BUTLER PA
3. SETBACKS: FRONT LINE - 40 FT FROM R/W
BACK & SIDE - 20 FT
4. PA ONE CALL: 20253111550
5. REFERENCES
    - 5.1. CURRENT DEEDS OF RECORD
    - 5.2. PREVIOUSLY RECORDED PLANS
        - 5.2.1. GREGORY PLAN NO. 1
PLAN BOOK 203 PG 48
        - 5.2.2. GREGORY PLAN NO. 2
PLAN BOOK 234 PG 16
        - 5.2.3. SCHIEBEL PLAN NO. 1
PLAN BOOK 247 PG 8
        - 5.2.4. KAMERER SUBDIVISION
PLAN BOOK 316 PG 22
        - 5.2.5. SMITH SUBDIVISION
PLAN BOOK 359 PG 33
        - 5.2.6. KAMERER/TOOMEY PLAN
PLAN BOOK 413 PG 48

PROPERTY AREA SUMMARY:

EXISTING TOTALS	
090-1F98-B5	80.10 AC (ASSESSED)
+ 090-1F98-B7	27.91 AC
EXISTING TOTAL	108.01 AC
REVISED 1F98-B5	
ORIG 090-1F98-B5	80.10 AC (ASSESSED)
- TRACT A	4.77 AC
REVISED 1F98-B5	75.33 AC (ASSESSED)
REVISED 1F98-B7	
ORIG 090-1F98-B7	27.91 AC
+TRACT A	4.77 AC
REVISED 1F98-B7	32.68 AC
REVISED TOTALS	
REV 1F98-B5	75.33 AC (ASSESSED)
+ REV 1F98-B7	32.68 AC
EXISTING TOTAL	108.01 AC

RECORDED ______ 20___	
PLAN BOOK	PAGE
434	**42**
SHEET ______ of ______	

REV	DESCRIPTION	BY	DATE
A	REVISIONS PER TOWNSHIP PLANNING COMMISSION COMMENTS	SDG	11/07/2025

GRAFF
SURVEYING

GRAFF SURVEYING LLC
PO BOX 521 | SAXONBURG, PA 16056
P: 724-352-3811 F: 724-352-1059
INFO@GRAFFSURVEYING.COM
WWW.GRAFFSURVEYING.COM

PROJECT DESCRIPTION

SCHIEBEL/GREGORY PLAN

BEING A

LOT LINE REVISION

FOR

ROY & GERALDINE SCHIEBEL
CAROL GREGORY

SITUATE 298 SCHIEBEL RD & 122 GREGORY LANE
CLEARFIELD TOWNSHIP
BUTLER COUNTY, PENNSYLVANIA

DATE	DRAWN	CHECKED	SCALE
10/6/25	SDG	Sdg	VARIES

PROJECT NO.	TAX PARCEL NO.	REVISION
25-192	090-1F98-B7 & B5	A

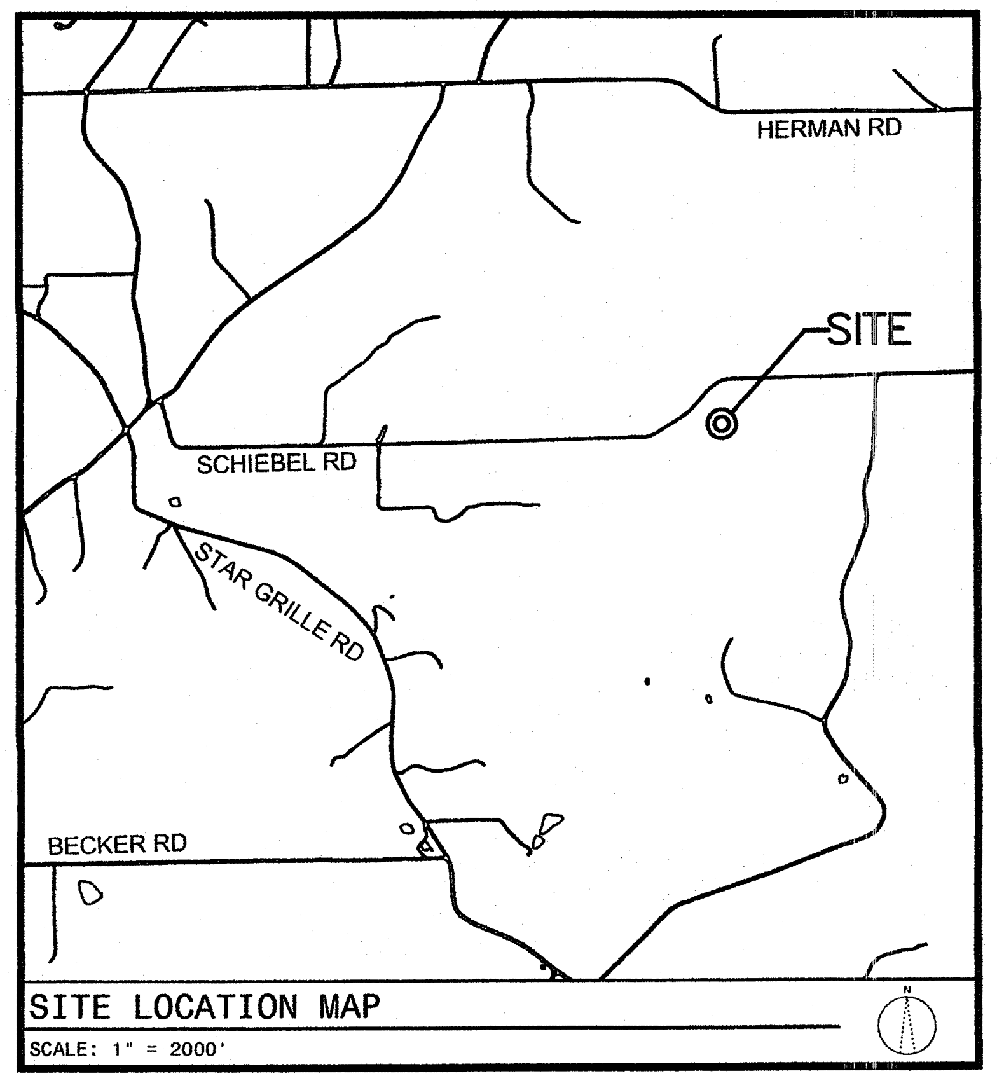
HERMAN RD
SITE
SCHIEBEL RD
STAR GRILLE RD
BECKER RD
N

SITE LOCATION MAP
SCALE: 1" = 2000'

PLAN ORIENTATION NOTE: THE BEARINGS SHOWN HEREON ARE BASED ON THE PENNSYLVANIA STATE PLANE COORDINATE SYSTEM (PA-S) / NAD 1983

NOTE: SUBJECT TO AND TOGETHER WITH ANY AND ALL EXISTING RIGHTS-OF-WAY, EASEMENTS AND CONDITIONAL CLAUSES OF RECORD OR ESTABLISHED BY DUE PROCESS.